LBID-620
c. 1

Lawrence Berkeley Laboratory
UNIVERSITY OF CALIFORNIA

ENERGY & ENVIRONMENT DIVISION

RECEIVED
LAWRENCE
BERKELEY LABORATORY

APR 21 1983

LIBRARY AND
DOCUMENTS SECTION

COMPUTER-CONTROLLED MULTIPLE-CHANNEL SYSTEM FOR ELECTROCHEMICAL EXPERIMENTS

Marc H. Katz, James T. Nichols, Frank R. McLarnon,
Elton J. Cairns, and Joseph E. Katz

September 1982

For Reference

Not to be taken from this room

LBID-620
c. 1

Prepared for the U.S. Department of Energy under Contract DE-AC03-76SF00098

LEGAL NOTICE

This book was prepared as an account of work sponsored by an agency of the United States Government. Neither the United States Government nor any agency thereof, nor any of their employees, makes any warranty, express or implied, or assumes any legal liability or responsibility for the accuracy, completeness, or usefulness of any information, apparatus, product, or process disclosed, or represents that its use would not infringe privately owned rights. Reference herein to any specific commercial product, process, or service by trade name, trademark, manufacturer, or otherwise, does not necessarily constitute or imply its endorsement, recommendation, or favoring by the United States Government or any agency thereof. The views and opinions of authors expressed herein do not necessarily state or reflect those of the United States Government or any agency thereof.

Lawrence Berkeley Laboratory is an equal opportunity employer.

DISCLAIMER

This document was prepared as an account of work sponsored by the United States Government. While this document is believed to contain correct information, neither the United States Government nor any agency thereof, nor the Regents of the University of California, nor any of their employees, makes any warranty, express or implied, or assumes any legal responsibility for the accuracy, completeness, or usefulness of any information, apparatus, product, or process disclosed, or represents that its use would not infringe privately owned rights. Reference herein to any specific commercial product, process, or service by its trade name, trademark, manufacturer, or otherwise, does not necessarily constitute or imply its endorsement, recommendation, or favoring by the United States Government or any agency thereof, or the Regents of the University of California. The views and opinions of authors expressed herein do not necessarily state or reflect those of the United States Government or any agency thereof or the Regents of the University of California.

COMPUTER-CONTROLLED MULTIPLE-CHANNEL SYSTEM FOR ELECTROCHEMICAL EXPERIMENTS*

Marc H. Katz, James T. Nichols,

Frank R. McLarnon, and Elton J. Cairns

Energy and Environment Division,

Lawrence Berkeley Laboratory

and

Department of Chemical Engineering,

University of California

Berkeley, California 94720

and

Joseph E. Katz

Department of Instrument Science and Engineering

Lawrence Berkeley Laboratory

Berkeley, California 94720

---

* This work was supported by the Assistant Secretary for Conservation and Renewable Energy, Office of Energy Systems Research, Energy Storage Division of the U.S. Department of Energy under contract No. DE-AC03-76SF00098.

ABSTRACT

A test system has been designed and constructed to allow the simultaneous and continuous cycling of 16 electrochemical cells, and the system can be readily expanded to accomodate 48 cells. It is configured with eight independent current-control units, each dedicated to two series-connected cells, and the cells can be driven by single charge and single discharge power supplies. The current controllers have a resolution and stability within 0.025% of full scale, and a response time constant of 1 ms. The charge and discharge profiles, including pulse charging and EPA power profile, discharging, are implemented through the use of various computer algorithms.

I. INTRODUCTION

Rechargeable batteries exhibit gradual capacity loss and/or catastrophic failure upon repeated charge-discharge cycling, and it is generally found that the capacity loss rates and failure mechanisms display a marked dependence upon the particular cycling regime employed. Laboratory investigations of these phenomena often rely upon lengthy cycle-life testing of many electrochemical cells. It has been found to be best to evaluate cell performance and life by repeatedly charging and discharging the cell while employing electrical waveforms similar to those expected in the intended application. A cost barrier to the independent testing of a large number of cells is the requirement for each cell to have a dedicated programmable power supply.

The multiple electrochemical cell test system described here has been built to allow the simultaneous and continuous cycling of 16 or more cells. The system is presently configured with 8 independent current control units, and each unit is dedicated to 2 cells connected in series. Two common, unregulated power supplies are used: one supplies all of the charge current, and the other supplies all of the discharge current. The system has a fast response time and the necessary flexibility to employ a wide range of electrical waveforms in both the charge and discharge modes.

A variety of cycling experiments can be performed on electrochemical cells. The most common and simple ones include charging and discharging at constant current or constant cell voltage. More realistic discharges are performed by maintaining a constant power level or by using a power profile, such as a standard electric vehicle driving profile (translated

from the EPA Urban Driving Profile[1]) shown in Figure 1, which requires a new power level adjustment every second. One can also use complicated charging modes, such as pulsating or alternating current.

The heart of the testing system is an analog circuit, which provides fast, accurate and independent control of the current to each of the cell strings. The analog circuit is controlled by a microcomputer system that sets the current level and polarity and monitors the cell voltages. The computer thereby is able to generate all of the testing modes mentioned above. As an option, the analog control circuitry can be driven by an external function generator. The microcomputer system monitors all relevant variables that characterize the behavior of the experimental cells and provides on-line data analysis and graphic display. Protection of the cells under test has been achieved through a variety of software limit settings on the measured variables and an appropriate design of the logic circuitry included in the analog circuit.

Twenty-four hours a day operation, complete independent operation of the 8 current-control circuits, flexibility in the selection of testing regimes and relatively straightforward addition of new testing modes are some of the features of the software system.

II. SYSTEM DESCRIPTION

At present, powerful and reliable microcomputer systems may be obtained at relatively modest prices. The availability of sophisticated real-time data acquisition hardware and software make it practical to use a microcomputer system for the control of a multiple-cell test

facility. We have chosen to use a LSI-11/23 computer[2] with the RT-11 operating system software.[2] The software we have developed is used for control, data acquisition, record keeping, and data display. A block diagram of the multiple electrochemical cell test system is shown in Figure 2. The system presently employs 8 current controllers (n=8) and can accommodate up to 16 cells under test at any one time. The number of controllers may be easily expanded, as illustrated in Figure 2. The current controller is a set-point type which maintains cell current at a value proportional to the analog control voltage input by means of an analog feedback control loop.

Current Controller

The current controller provides means for both computer and local (manual) control of both charge and discharge currents. "Control" means that the current is maintained at the set point level independent of subsequent changes in the cell's internal impedance, variations in the external power supply, or current changes in any of the other cells. Local control is used for setup, test, or manual operation. According to the type of test, control of current may require the current to follow a constant power or a particular power or current demand. The controller must have sufficient bandwidth to deliver or sink a current such as that demanded by the EPA power profile (Figure 1). Pulsed-current waveforms place even more stringent demands on the current-controller response time. The current-controller time constant of 1 ms provides a transient response adequate to supply the rapidly fluctuating currents required for many electrochemical experiments.

The task of monitoring both cell current and cell voltages is performed by the computer system. A decision to terminate a test or to change the direction of current flow is made by software logic. There are no voltage comparators or hardware logic to control current based on cell voltages. The current controller is designed to perform the task of analog current control on a continuous basis. The setpoint control voltage is usually supplied by the microcomputer system, or it may be supplied by an external function generator, for example, when rapidly pulsed currents are desired.

Functional control of the current controller is by front panel switches or 0V to 4V logic level control lines (TTL) from the computer system. The computer system must provide three output control lines for each current controller. One output line determines the direction of the current flow (charge or discharge). A second output control line is used to connect or disconnect the cells under test by means of a relay. This provides the ability to completely isolate a cell from any current source or load. The third output control line specifies the set point control source: e.g. an external function generator or the computer's digital-to-analog converter. Additionally, an input line from each controller to the computer is required to monitor the state of the front panel switch that assigns computer or local (manual) control.

Power Down and Safety

The current controllers must provide for a safe shut-down under conditions of power failure or interruption. A sudden power failure must not cause hazardous conditions, damage to the cells (overcharge or overdischarge), or interrupt the test in such a manner that precludes easy

resumption of operation. The controller digital logic is designed so that when power is lost the relay is open, disconnecting the cells under test from the controller. In the event of a power failure the disconnected cells are not reconnected except by manual command (after power has been restored). An additional provision of the controller digital logic is that a disconnect command will reduce the cell current to zero before the relay may open, which permits use of relatively low-current, inexpensive relays. If the computer control program should fail, the controller digital logic timer circuit will disconnect any cells under test within 2 minutes. The controller disconnect timer must therefore be reset at least once every 2 minutes by a computer command on any logic level control line to any current controller.

Logic Supply and Interface

The controller logic power supply and computer interface contain power supplies with power sufficient to energize the digital and analog logic in all of the current controllers. Each current controller requires 3 output control lines from and 1 input line to the computer. The computer also must provide an analog set-point control voltage. The timeout logic protection is naturally located in the interface, and it is the only digital logic in this device. The interface is a flexible and easily-expandable means of distributing to each controller the input and output (I/O) control lines from standard computer I/O devices (described more fully in Section IV below). In effect, the interface is a junction board for many mass-terminated 40-conductor cables. Each controller, through the interface, is provided with logic power, control lines, the analog set point control voltage, and the timer-controlled

connect/disconnect enable line by means of wired busses and jumper wires on a printed circuit board. The power supplies have spare capacity and the wiring may be easily expanded to provide for more than 8 current controllers.

Analog Resolution

Presently, many commercial 12-bit (1 part in 4096, 0.025% of full scale) digital to analog (D/A) voltage sources are available as LSI-11/23 peripheral devices. Choice of this accuracy for the set-point control voltage source implies that all of the other system controls and measurements should aim for this level of precision. Therefore, the current controllers must be stable and reproducible to within 0.025% of full scale, and any crosstalk due to changes of current in other cells must also be less than 0.025% of full scale.

Cell voltages and metering shunt voltages are converted by differential type analog to digital (A/D) converters. The Differential Current and Buffer Amplifier Box (Figure 2) is used to connect the cells and metering shunts to the A/D converters. The A/D converters have 12-bit precision with a nominal minus 5 volt to plus 5 volt input range. A differential amplifier with a gain of 100 is used to convert the (50 mV full scale) metering shunt voltage to 5 V full scale. At this voltage level, noise induced by digital signals and clocks in the CPU and disk drive does not introduce significant errors. Additionally, the interface box contains unity gain buffers with less than 10 pico-ampere input bias current. These low-current buffer amplifiers are needed for potential difference measurements between each of a cell's working electrodes and its reference electrode. It is necessary to reduce the load on

these low-area (high impedance) reference electrodes when the measurements are made with external equipment, such as a strip chart recorder.

III. CURRENT CONTROLLER DESCRIPTION

The current-controller circuitry is constructed on a single printed circuit card and mounted along with the high-power-dissipation control elements in a size 4 NIM module.[3] A block diagram of the current controller is shown in Figure 3. Inside views of the current-controller NIM bin are shown in Figures 4 and 5. The front panel controls, the rear panel connectors, and the relay to disconnect the cell under test are displayed in Figure 6.

Control and Metering Shunts

The full-scale current of the current controller is determined by the rating of the control shunt. The control shunt is schematically shown in Figure 3 and may be seen mounted below the bottom of the controller printed circuit card in Figure 4. Control shunts[4] are available in standard 1, 2, 3, 5 and 10-ampere sizes, and the current controllers have been tested with each of these shunts. Errors in current set-point values and long-term drift were measured at less than 0.025% of full scale for both charge and discharge currents. It was appropriate to provide another metering shunt external to the controller in series with the current lines to the cells under test. This current metering shunt provides a voltage which reverses sign when the current direction is changed from charge to discharge. This voltage is employed by the computer system to detect current direction and to confirm that there is in fact an output current from the controller. These relatively

inexpensive shunts have been calibrated against National Bureau of Standards certified standards. Errors due to self heating are less than 0.025% of full scale, except for the 10-ampere shunt at currents in excess of 8 amperes. Self heating errors are readily reduced by a small flow of air across the shunt.

VMOS Control

The current-controller analog circuit is a simple feedback control series regulator type. The linear dissipative element is a VMOS transistor[5] capable of dissipating 120 watts into an infinite heat sink. Figure 5 shows the arrangement of heat-dissipating elements in the NIM module. Cooling air flow up through the NIM controllers is provided by an intake fan underneath (cool air intake from the front of the rack) and an exhaust fan above (exhaust air out to the rear of the rack). The flow of cooling air is also directed across the control shunt, and the digital and analog control logic circuitry is shielded from the heat dissipating elements by a metal plate (Figures 4 and 5).

The VMOS transistor is a good linear control element and an efficient switch. By using two VMOS transistors, one as the linear control element and the other as a switch (Figure 3), the polarity of the cells under test can be readily switched. A single power supply for both charge and discharge currents can be employed, but power dissipation considerations for the linear control element illustrate the advantages of using separate charge and discharge power supplies. The supply voltage required to charge a cell (see Figure 3) is:

$$V(\text{supply}) = V(\text{cell}) + V(\text{control VMOS}) + V(\text{drop}) \qquad (1).$$

V(cell) is the open-circuit cell voltage, V(control VMOS) is the voltage drop across the control VMOS transistor biased in the linear region, and V(drop) is the sum of all the other voltage drops in the circuit. V(drop) is increased by the resistive losses in the controller wiring and cabling to the cells under test. Also included in the term V(drop) is the forward voltage drop in the steering diode, D1 (Figure 3). For minimum power dissipation in the control element it is appropriate to keep the supply voltage to the minimum value necessary to insure that the control element has sufficient voltage to act as a linear control element. Equation (1) can be written as:

$$V(\text{control VMOS}) = V(\text{supply}) - V(\text{cell}) - V(\text{drop}) \qquad (2).$$

If the polarity of the cell under test is now reversed and the magnitude of the cell current is unchanged, the voltage across the linear control element becomes:

$$V(\text{control VMOS}) = V(\text{supply}) + V(\text{cell}) - V(\text{drop}) \qquad (3).$$

V(drop) and the supply voltage will be unchanged from their values prior to polarity reversal. Therefore, the power dissipation in the control element can vary by a power level equal to twice the product of the cell voltage and the discharge current. The increased power dissipation required in the control VMOS transistor will pose an even larger problem if a single power supply is employed to test two cells in series. The use of separate charge and discharge supplies allows for the minimum

amount of power dissipation in the control elements and therefore less heat, resulting in longer life, greater accuracy and increased reliability for the current controller.

Common Supplies

Both charge and discharge power supplies must have current ratings sufficient to supply the sum of the full scale currents for all of the current controllers. Both supplies may be inexpensive since load or line regulation is not required. The supplies must maintain their full-load output voltage at a value greater than the minimum supply voltage required, as given by Equation 1. For example, with a 2-ampere full scale current controller it is possible to change the supply voltage from a minimum of 4 volts to a maximum of 15 volts and maintain constant current. (For this test the open-circuit cell voltage was approximately 1.8 volts). At no point in the test was the change in charge current due to a change in supply voltage greater than 0.025% of full scale. The excellent rejection of supply voltage change is also reflected in good current crosstalk performance.

Current Time Response and Crosstalk

Both the time response and crosstalk performance of the current controller may be seen in the photographs of three oscilloscope traces shown in Figure 7. The upper waveform is the external analog setpoint control voltage. The charge current response of a 10-ampere (full scale) current controller to a 7 volt, 10 millisecond pulse with a 100 millisecond period is shown by the middle trace. The 7-ampere change in charge current settles to within 0.01% of the final value within 5

milliseconds. The lower trace shows a typical current fluctuation caused by crosstalk to one of the other current controllers. At the time of the most rapid change in current, the common charge power supply voltage is changed. The current controller response is sufficiently rapid, as may be seen in Figure 7, to limit the change in current due to crosstalk to less than 10 milliamperes, (for a 7-ampere current change in another controller) with less than 0.4 milliseconds duration. The long-term (greater than 0.4 milliseconds) change in current in any controller, due to a full-scale change of current in any other controller, was measured to be less than 0.025% of full scale. Note that the lower trace of Figure 7 shows no discernible shift in the steady-state value of the controller current.

Protection and Expansion

Each of the current controllers has a 15-volt protective diode on the charge supply input line and 12-volt protection on the discharge supply input line to prevent an accidental overvoltage condition or unnecessarily large power dissipation due to an external current supply failure or improper set up. Each of the supply input lines is fused for the full scale current as are the controller output lines to the cells under test.

The modular construction and the relative ease of connecting VMOS transistors in parallel make it possible to extend the range of these controllers to higher currents. One could readily drive many heat sink assemblies of 10A capacity (Figure 5) using appropriate control and metering shunts.

IV. COMPUTER HARDWARE AND SOFTWARE DESCRIPTION

The system is required to charge and discharge cells continuously and simultaneously provide the means to store, analyze, and display data. The data analysis must include tabulation, graphical display, and numerical calculations. The computer makes the logical decisions about current level and charge/discharge modes. For example, for constant current operation, the computer establishes a single setpoint for a particular current controller. For constant voltage, constant power or power profile operation, a software algorithm calculates a current setpoint, based on the previous cell voltage and current. This algorithm uses the assumption that changes in cell voltage are proportional to changes in current, and the calculated proportionality constant is updated at each iteration. Thus the flexibility of charge/discharge modes can be provided without modification of the hardware.

Hardware

The current-control hardware was designed to be modular in order to permit convenient expansion of the system. A block diagram of the LSI-11/23 and its peripherals is shown in Figure 8. The LSI-11/23 chosen for this system uses a memory with 16-bit words but has an 18-line addressing bus to allow the CPU to access 128K words of memory.

To accomplish the stand-alone task of current control and data analysis, it is most convenient to use hard disks because of the large programs and data files. The dual RL01 disk drives[2] provide 5.2 megabytes of memory capacity. The other hardware installed for data analysis are a CRT terminal[6] with graphics capability and a dedicated

plotter.[7] A second CRT terminal[6] is used to display messages from the control program, and a line printer[8] is used to aid in program development and data tabulation. The CRTs and line printer are interfaced with the computer through a four-port asynchronous serial card, set at 9600 BAUD rate for the terminals and 1200 BAUD rate for the dedicated plotter.

The control functions described in the current-controller section are supplied by two 4-channel D/A converters[9] for the 0 to 10-volt set point, and by two 16-bit parallel interface cards[10] for the logic-control lines. The input ports of one of the 16-bit parallel interface cards are used to determine if the controller is in the appropriate mode to receive computer commands. At the time that this reading is made, the controller disconnect timer is reset by an 0.5 microsecond pulse from the "data ready" line of the interface card. This is a convenient method to prevent inadvertent damage to the cells should the software program fail to control the current.

To identify the end of charge or improper cell voltages, the software must provide for continuous monitoring of the cell voltages. This capability is provided through a 64-channel of A/D converter[11] using two 8-channel master cards and two 24-channel slave cards. The current level and polarity are also monitored through the use of the A/D converters, a precision shunt, and the previously-described amplifiers.

Software

The software system is built around the special features of the extended memory monitor provided by RT-11. The physical memory of the computer is occupied by two jobs which share the execution time, a foreground job and a background job. The foreground job has higher execution priority: it is always dedicated to the program that controls and monitors the cells. This real-time program operates continuously and takes specific control actions at regular time intervals. However, during the real-time program "resting time" a background program is allowed to execute until the real-time program again requests control over the system. Given the complexity of such an application and the size of the real-time program (50K words), it is necessary to use the extended memory monitor to take full advantage of the 128K words of memory available with an LSI-11/23.

For any particular experiment, various actions are required (Figure 9). These include updating cell operation parameters, properly connecting the hardware, switching cell polarity at the end of charge or discharge, executing a current control algorithm, recording data from the cells, checking limit setpoints, and transferring control to the message handler.

RT-11 provides a communication path between a foreground and a background job. A "watchdog" program is run in the background, which interfaces with the operator. This program sends messages to the real time program, which are decoded by the message handler (Figure 9). Necessary action is then taken in real-time, and acknowledgement messages are sent to the background. This allows an operator to change operational

parameters of one experiment (such as the current, the rate of data taking, etc.), stop, or re-start its execution at any time, all without interacting with other experiments.

The watchdog program can be interrupted without harm to the real-time program. The background is then free for program development or data analysis for the experiments.

V. APPLICATIONS

The computer-controlled multiple-channel system has been successfully employed to cycle 1.3-2.6 Ah zinc/nickel oxide cells under various charging and discharging profiles, including: constant-current, constant-current voltage-limited, and pulsed-current charging; and constant-current, constant-power, and power-profile discharging. All eight channels have been employed simultaneously without difficulty.

A stringent test of the system response time and accuracy is the application of the EPA power profile (Figure 1) to discharge a zinc/nickel oxide cell. The results of such a test are displayed in Figure 10. The measured power levels show an average deviation of less than 5 mW and a maximum deviation of 42 mW from the intended profile (average power level 0.9 W).

Figure 11 shows typical graphical data display for a 2.3 Ah zinc/nickel oxide cell cycled with pulsed-current charging and EPA power profilel discharging. It is also convenient to plot data such as capacity vs cycle number, cell voltage vs coulombs, etc. This system is presently employed to study the cycle life of zinc/nickel oxide cells

under a variety of experimental conditions.

VI. SUMMARY

A multiple electrochemical cell testing system has been designed, constructed and tested. It has the following characteristics:

1. Simultaneous and continuous cycling of eight independent series strings of electrochemical cells can be accomplished using two common power supplies.

2. The system has the necessary flexibility and fast (ms) response time to accommodate a wide variety of cell charge and discharge waveforms.

3. The system control hardware provides 0.025% of full scale resolution in current settings. Current measurements show less than 0.025% of full scale errors due to temperature or circuit instabilities in any of the current controllers. Also, current errors due to crosstalk are less than 0.025% of full scale within 0.4 ms after an abrupt current change in another controller.

4. System software has been written to allow for twenty-four hours-a-day, completely independent operation of the eight current controllers. The system software provides for graphic and printed output, as well as flexibility in the selection of testing regimes.

5. Ease of expandibility of hardware and software has been provided.

VII. ACKNOWLEDGEMENTS

The authors are grateful to R. Strudwick for assistance with VMOS design and construction of the prototype current controller, R. Michelson for assistance with RT-11/23, G. Skipper for assistance with fabrication and test of finished modules, and A. Windsor for assistance with elimination of system and measurement noise. The authors also acknowledge financial support by the Assistant Secretary for Conservation and Renewable Energy, Office of Energy Systems Research, Energy Storage Division of the U.S. Department of Energy.

REFERENCES

1. EPA Urban Driving Profile, Federal Register 11/10/70.

2. Digital Equipment Corporation, Maynard, Massachusetts.

3. NIM - Nuclear Instrumentation Module; see Standard Nuclear Instrument Modules adopted by AEC NIM Committee, TID-20893 (Rev. 4), July 1974.

4. Control and metering shunts are of 0.25% absolute accuracy and are manufactured by Weston, Westinghouse, and Empro Corporations.

5. VN1206N1 or VN1204N1, N-channel enhancement mode power MOSFET. Supertex Inc., Sunnyvale, California.

6. ADM-3. Lear Siegler, Inc., Anaheim, California

7. Digital Plotter Model 4662. Tektronix Co., Beaverton, Oregon.

8. LA-120. Digital Equipment Corporation, Maynard, Massachusetts.

9. DT2766. Data Translation, Natick, Massachusetts.

10. DT2768. Data Translation, Natick, Massachusetts.

11. ST-LSI2 and ST-LSI2-ADX. Datel, Mansfield, Massachusetts.

References to a company or product name does not imply approval or recommendation of the product by the University of California or the U.S. Department of Energy to the exclusion of others that may be suitable.

Figure Titles and Captions

---

1. EPA Urban Driving Profile.

   Federal Register 11/10/70. Power requirements are scaled to a 1.4 Ah Zn/NiOOH cell.

2. Multiple Electrochemical Cell Test System Block Diagram.

   The interconnection block diagram is illustrated for n independent current controllers. Cabling is detailed for each of n controllers with two cells connected in series under test.

3. Current-Controller Block Diagram.

   Current-controller digital and analog circuitry is shown with the relay positioned for the cells under test disconnected. When connected, relay contacts 1A and 1B will be closed. Charge current will then flow from the charge supply through Q1, D1, the current metering shunt, the cells under test, and the charge control (Q2), and it will return to the supply common via the control shunt. Discharge current will flow from the discharge supply through Q3, D2, the cells under test, the current metering shunt, and the discharge control (Q4), and it will return to the supply common via the control shunt.

4. Inside View of the Current Controller, Logic Card and Control Current Shunt.

This side-view photograph of the current controller shows the printed-circuit logic card. The control shunt may be seen mounted directly on the bottom of the printed-circuit logic card.

5. Inside View of the Current Controller and Heat Dissipating Elements.

This photographic view highlights the heat dissipating elements located inside the current controller. Note that the charge VMOS switch and discharge control VMOS are mounted on one heat sink, while the discharge VMOS switch and the charge control VMOS are mounted on the other heat sink.

6. Current Controller, Front and Rear Panels.

Local (manual) front panel control of all functions is possible by means of the switches and push buttons shown. Indicators are provided to clearly display the present status of the current controller, even while under computer control. The fuses and relay are mounted on the rear panel for easy access. A 40-conductor flat ribbon cable passageway is provided at the lower left of the rear panel. By means of this cable the current controller is connected to the logic power supply and computer interface.

7. Current Response and Crosstalk Waveforms.

The upper waveform is a 7-volt (external function generator) set point control voltage. The middle trace is the corresponding 7-ampere charge current waveform. The lower trace is typical of the current change induced in any other current controller output due to the 7 ampere change shown by the middle trace.

8. Block Diagram for the LSI-11/23 Computer System and Peripherals.

This interconnection block diagram details the computer hardware and its interconnections with the current controller and cells under test.

9. Multiple Electrochemical Cell Test System: Software Modules Interconnection Block Diagram.

The main routine of the foreground real-time program (upper part of the figure) communicates with various control subroutines and with the message handler. A message from the background watchdog program (lower part of the figure) causes the message-receiver subroutine to execute: the message is transferred to the handler and decoded and control is then transferred to the appropriate action subroutine. Messages are subsequently relayed to the background. Operator control is always directed to the background job.

10. Comparison of Computer-Implemented EPA Urban Driving Profile with Specified Profile.

ORDINATE: Actual power minus specified power (mW).

ABSCISSA: Time (sec).

11. Charge/Discharge Curves for a 2.3 Ah Zn/NiOOH Cell Cycled with 10 Hz Pulsed-Current Charging (9/1 off/on) and EPA Power-Profile Discharging (Fig. 1).

CHARGE:

Solid curves: measurements at current-on time

Dotted-dashed curves: measurements at current-off time

VCEL: NiOOH electrode vs Zn electrode

REF-: Hg/HgO reference electrode vs Zn electrode

+REF: NiOOH electrode vs Hg/HgO reference electrode

Dashed lines: open-circuit values of REF- and +REF

DISCHARGE:

Triangles: at base load (.049 W)

Squares: at peak load (7.28 W)

Dots: at intermediate load (2.90 W)

Other notation as in charge portion of this figure.

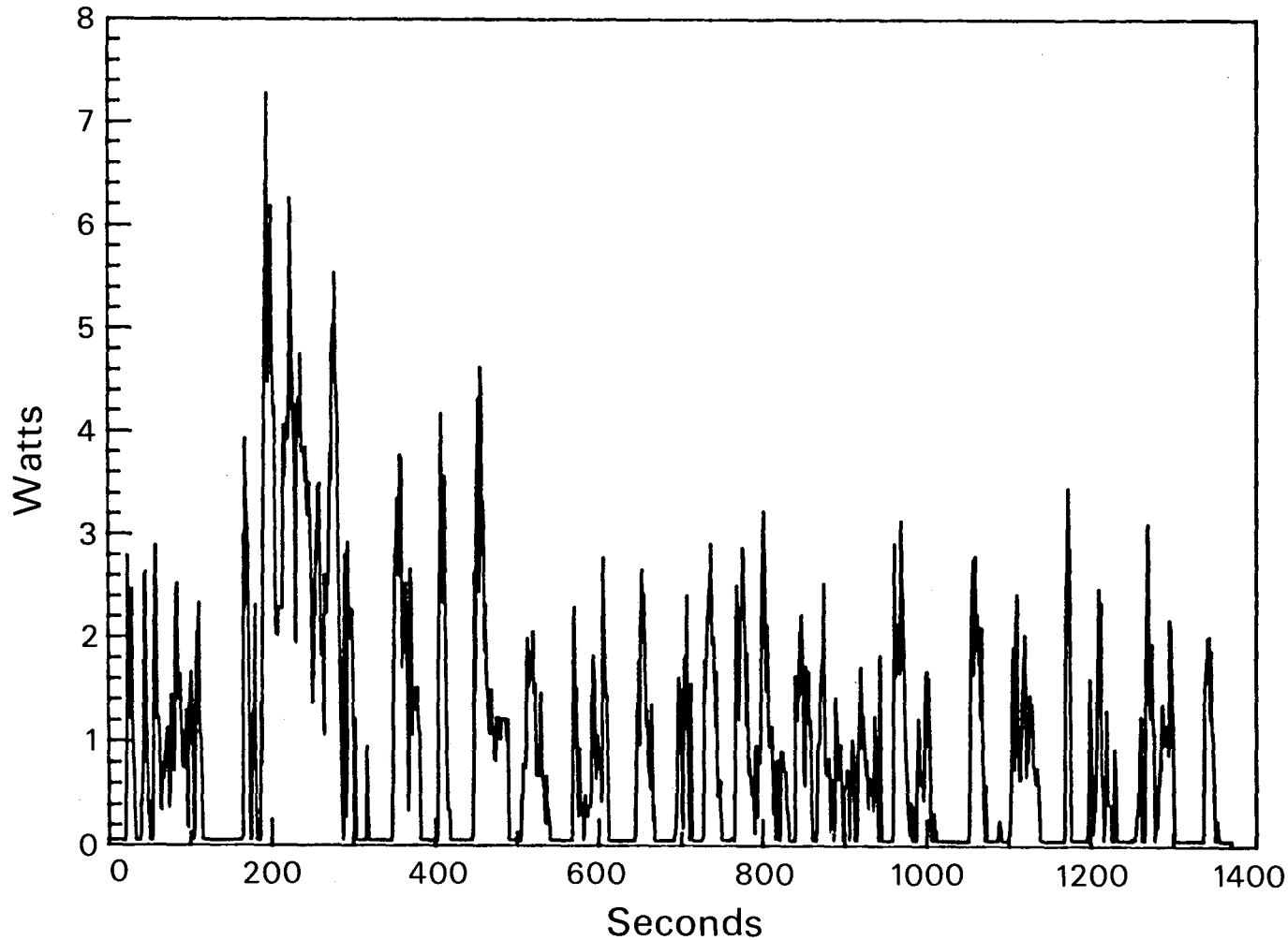

EPA URBAN DRIVING PROFILE: POWER

XBL 821-1769

FIGURE 1

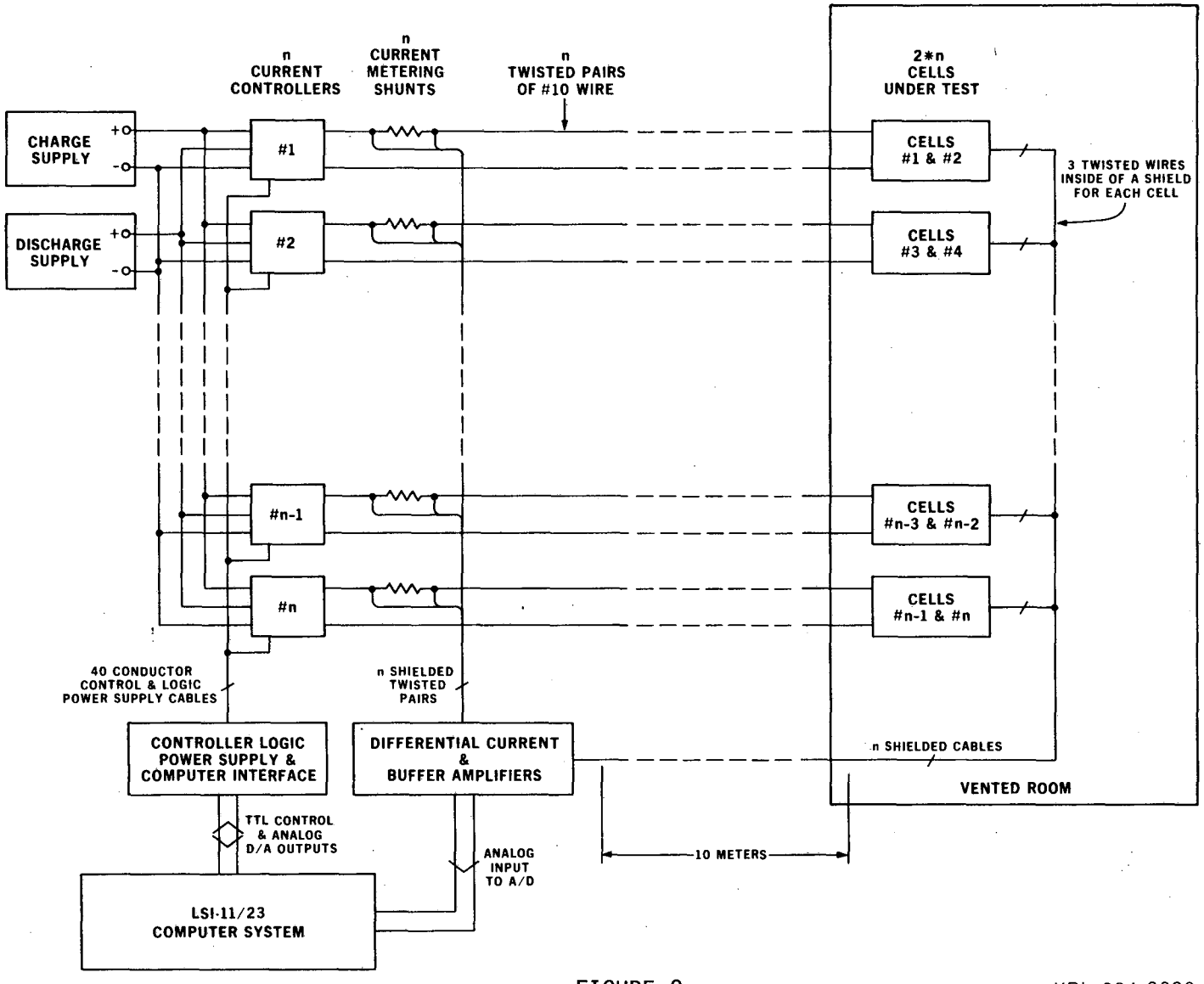

FIGURE 2

XBL 824-9290

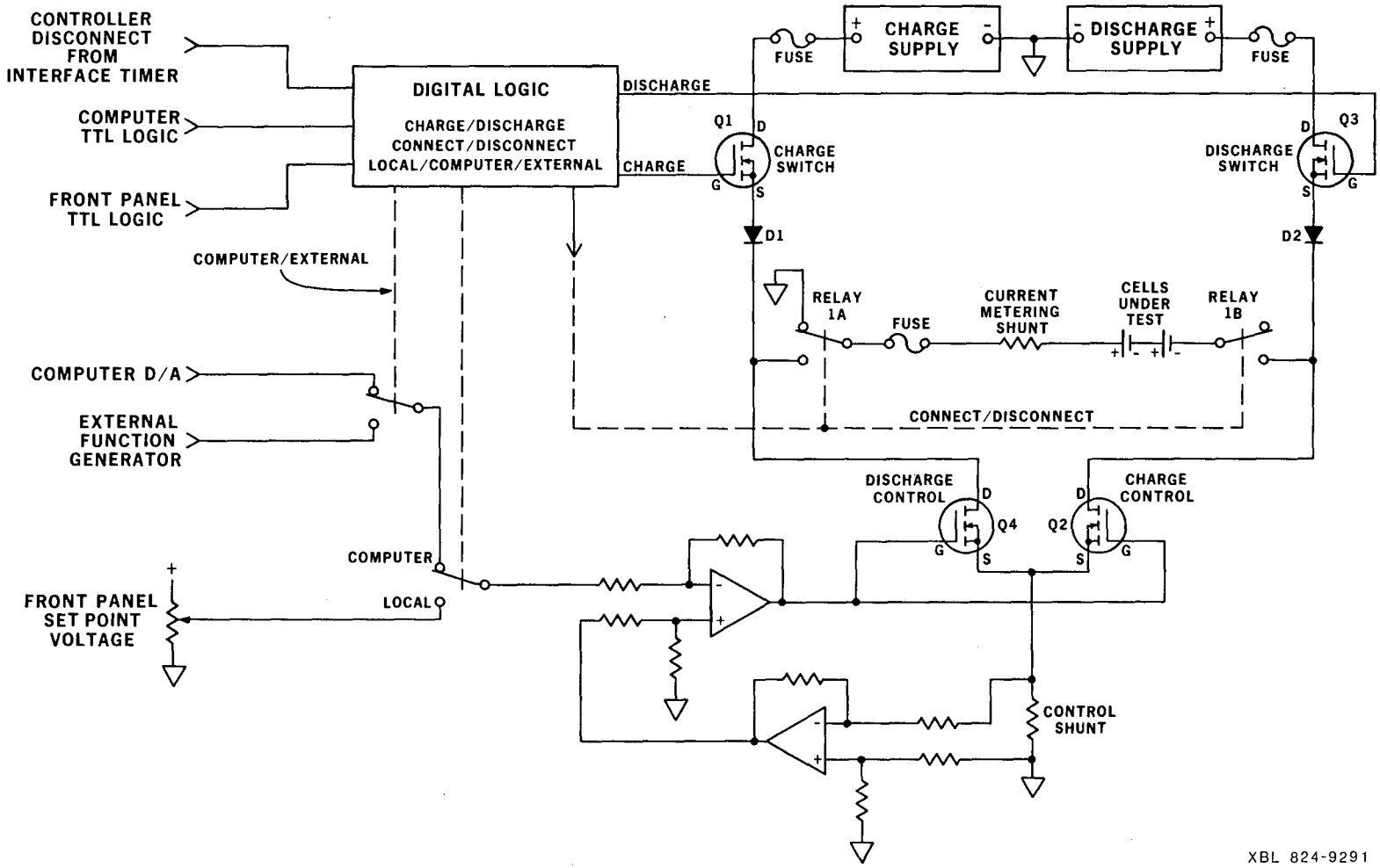
CONTROLLER DISCONNECT FROM INTERFACE TIMER
COMPUTER TTL LOGIC
FRONT PANEL TTL LOGIC
DIGITAL LOGIC
CHARGE/DISCHARGE
CONNECT/DISCONNECT
LOCAL/COMPUTER/EXTERNAL
DISCHARGE
CHARGE
FUSE
CHARGE SUPPLY
DISCHARGE SUPPLY
FUSE
Q1
D
G
S
CHARGE SWITCH
Q3
D
S
G
DISCHARGE SWITCH
D1
D2
COMPUTER/EXTERNAL
RELAY 1A
FUSE
CURRENT METERING SHUNT
CELLS UNDER TEST
RELAY 1B
CONNECT/DISCONNECT
COMPUTER D/A
EXTERNAL FUNCTION GENERATOR
DISCHARGE CONTROL
Q4
CHARGE CONTROL
Q2
COMPUTER
LOCAL
FRONT PANEL SET POINT VOLTAGE
CONTROL SHUNT
XBL 824-9291

FIGURE 3

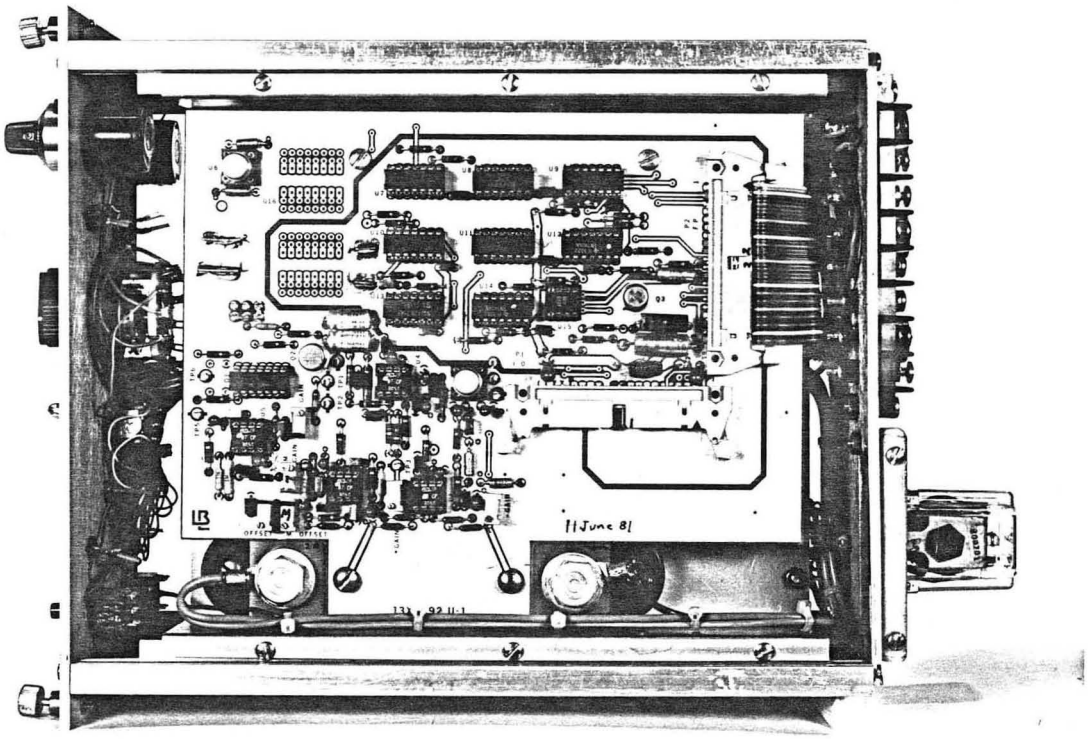

XBB 822-1570

FIGURE 4

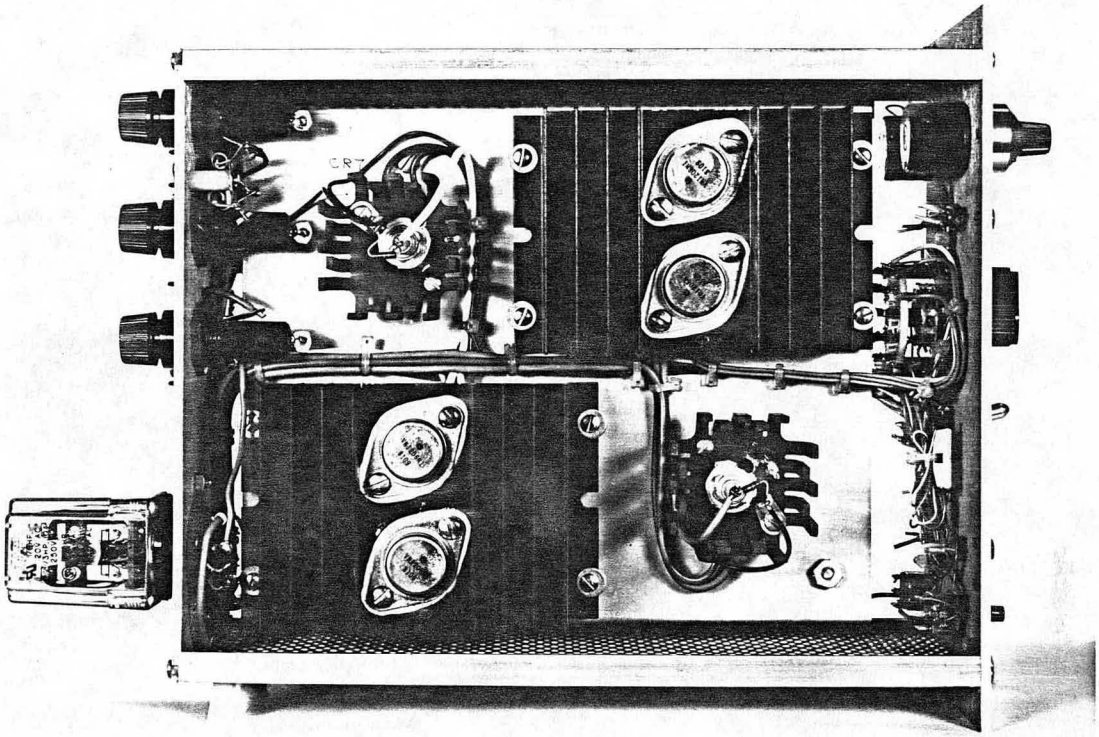

XBB 822-1569

FIGURE 5

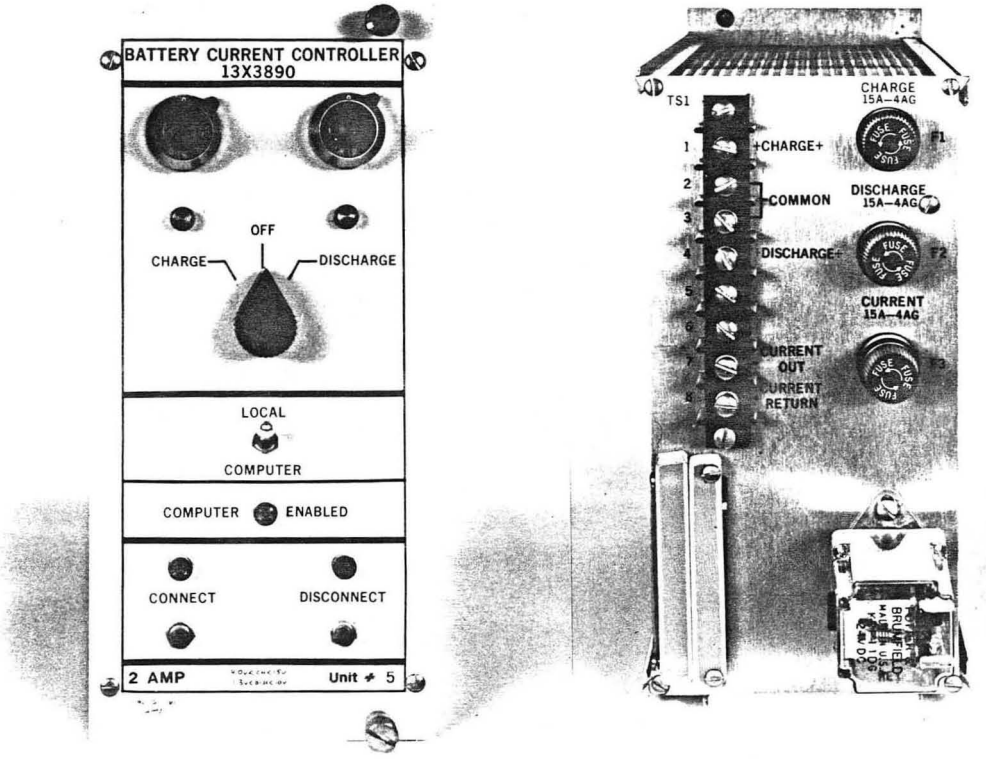

XBB 822-1568A

FIGURE 6

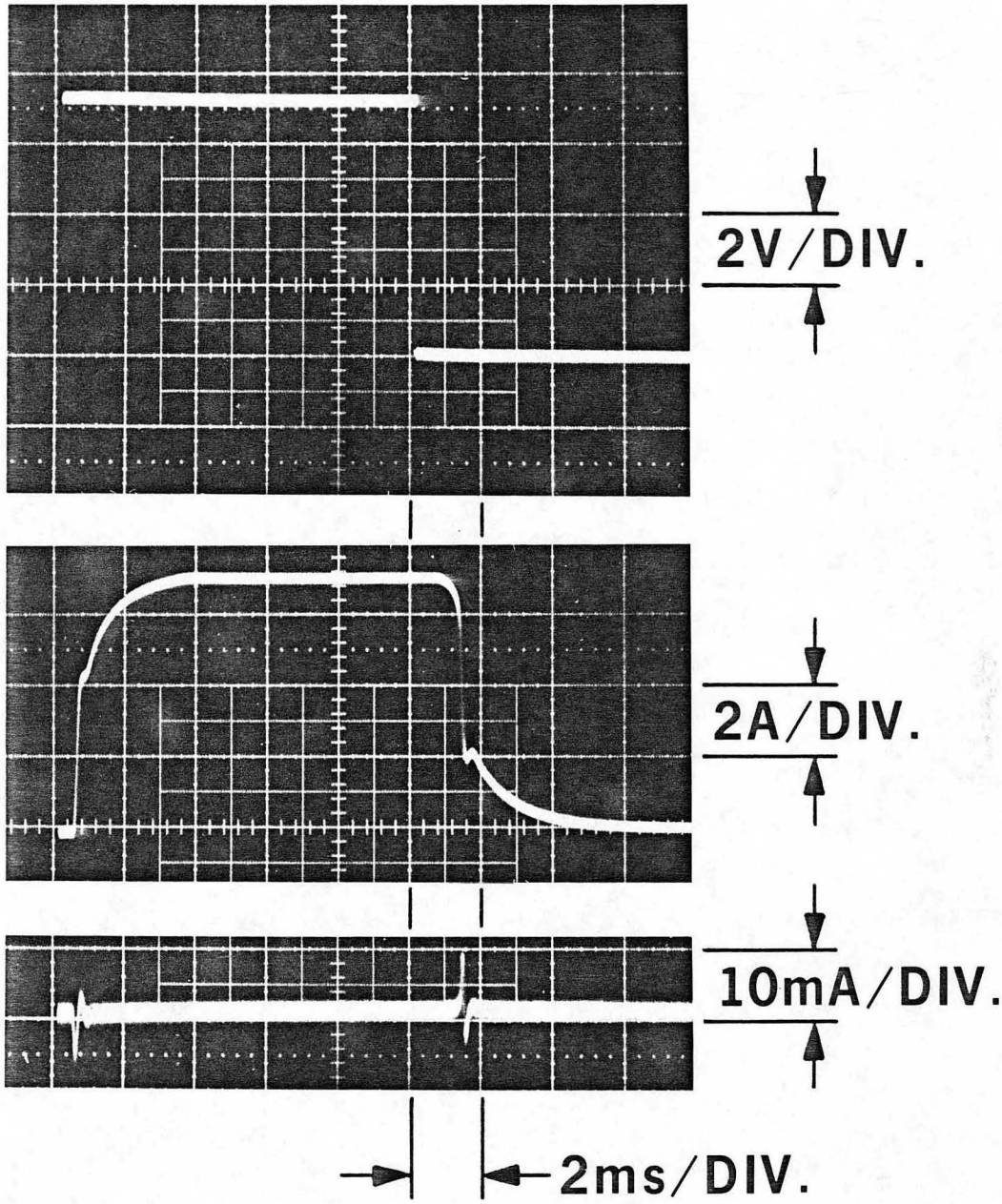

XBB 824-3738

FIGURE 7

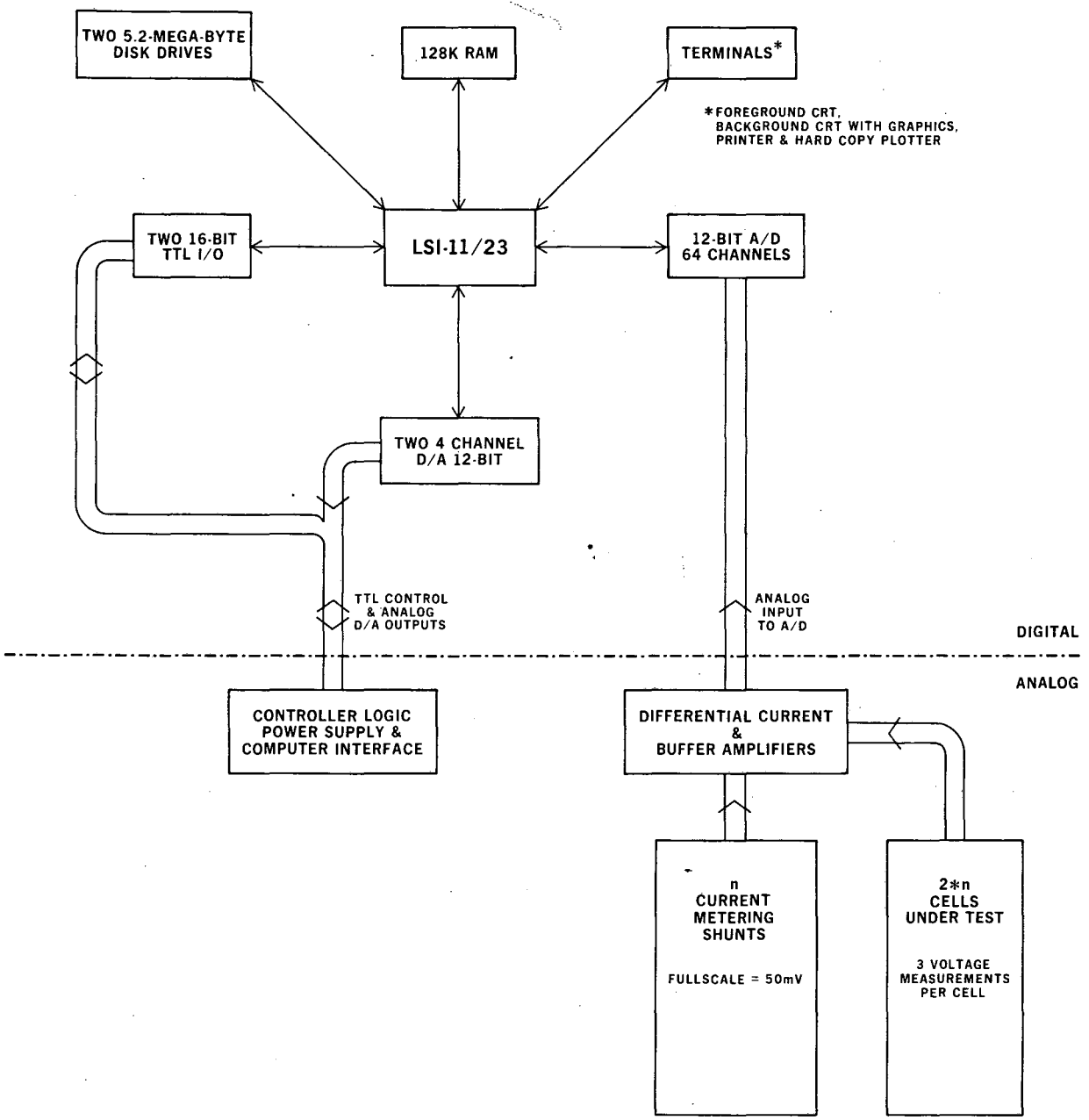

XBL 824-9288

FIGURE 8

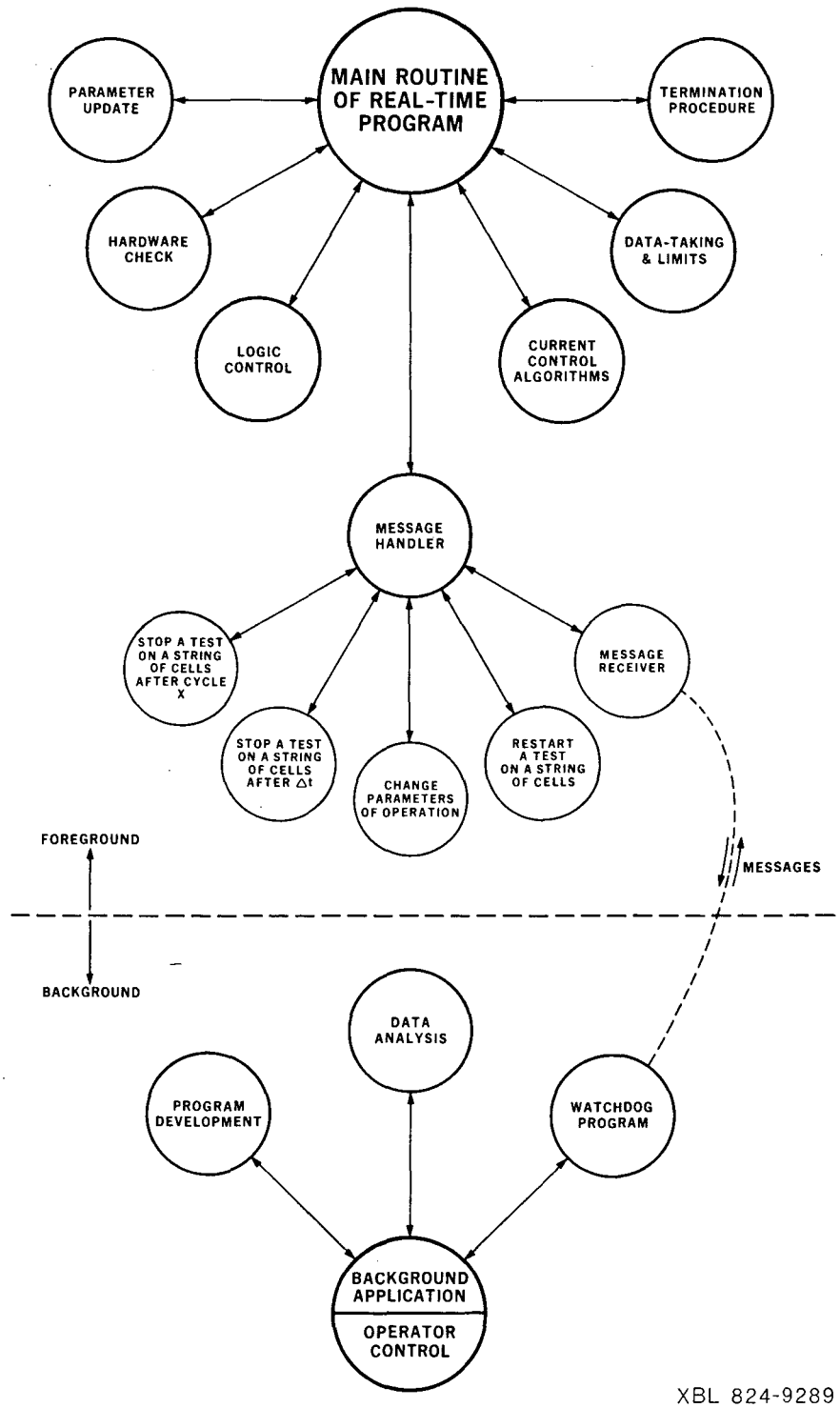
MAIN ROUTINE OF REAL-TIME PROGRAM
PARAMETER UPDATE
TERMINATION PROCEDURE
HARDWARE CHECK
DATA-TAKING & LIMITS
LOGIC CONTROL
CURRENT CONTROL ALGORITHMS
MESSAGE HANDLER
STOP A TEST ON A STRING OF CELLS AFTER CYCLE X
MESSAGE RECEIVER
STOP A TEST ON A STRING OF CELLS AFTER Δt
CHANGE PARAMETERS OF OPERATION
RESTART A TEST ON A STRING OF CELLS
FOREGROUND
MESSAGES
BACKGROUND
DATA ANALYSIS
PROGRAM DEVELOPMENT
WATCHDOG PROGRAM
BACKGROUND APPLICATION
OPERATOR CONTROL
XBL 824-9289

FIGURE 9

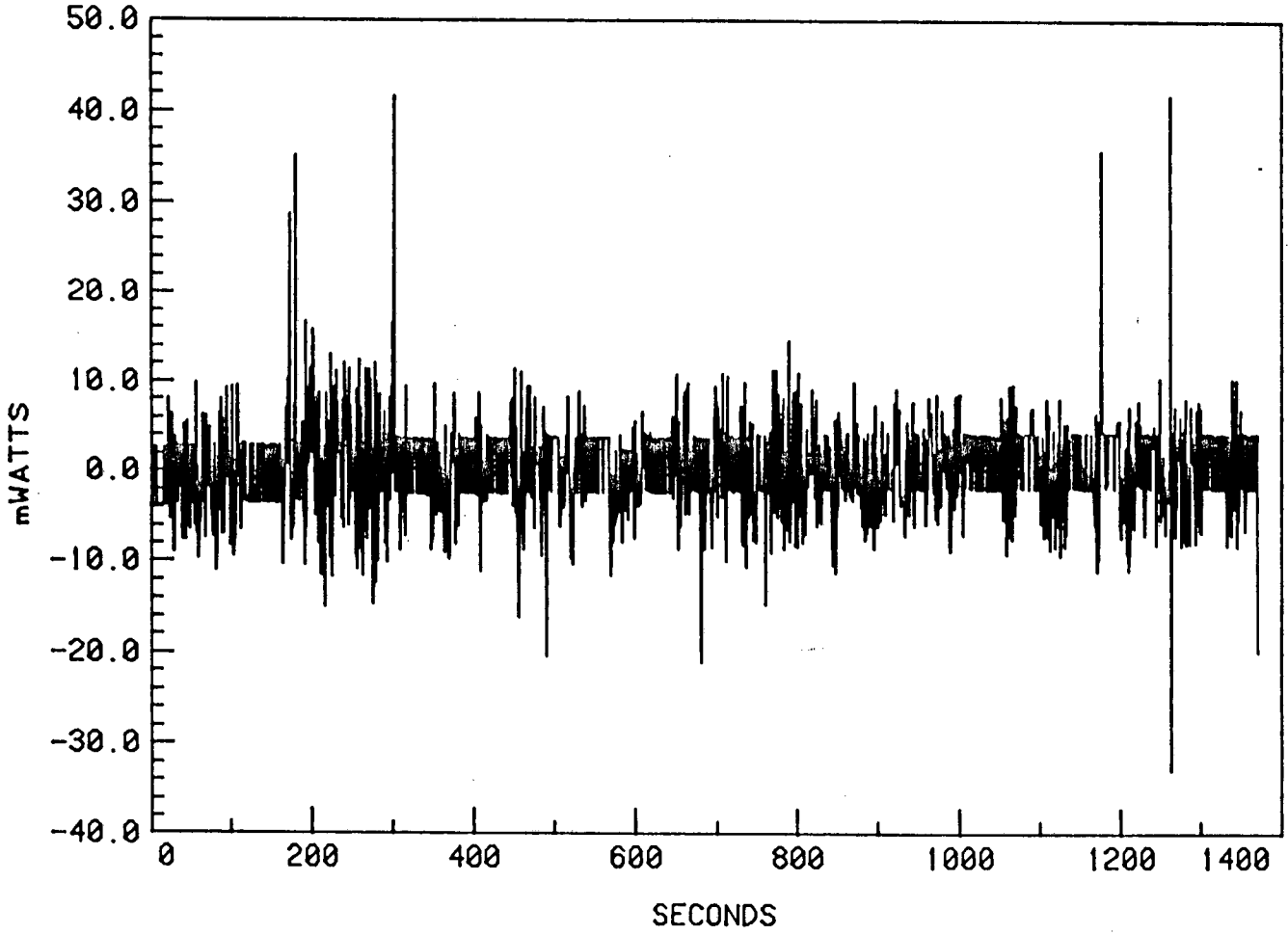

EPA URBAN DRIVING PROFILE : Pprf-P

FIGURE 10

XBL 827-10778

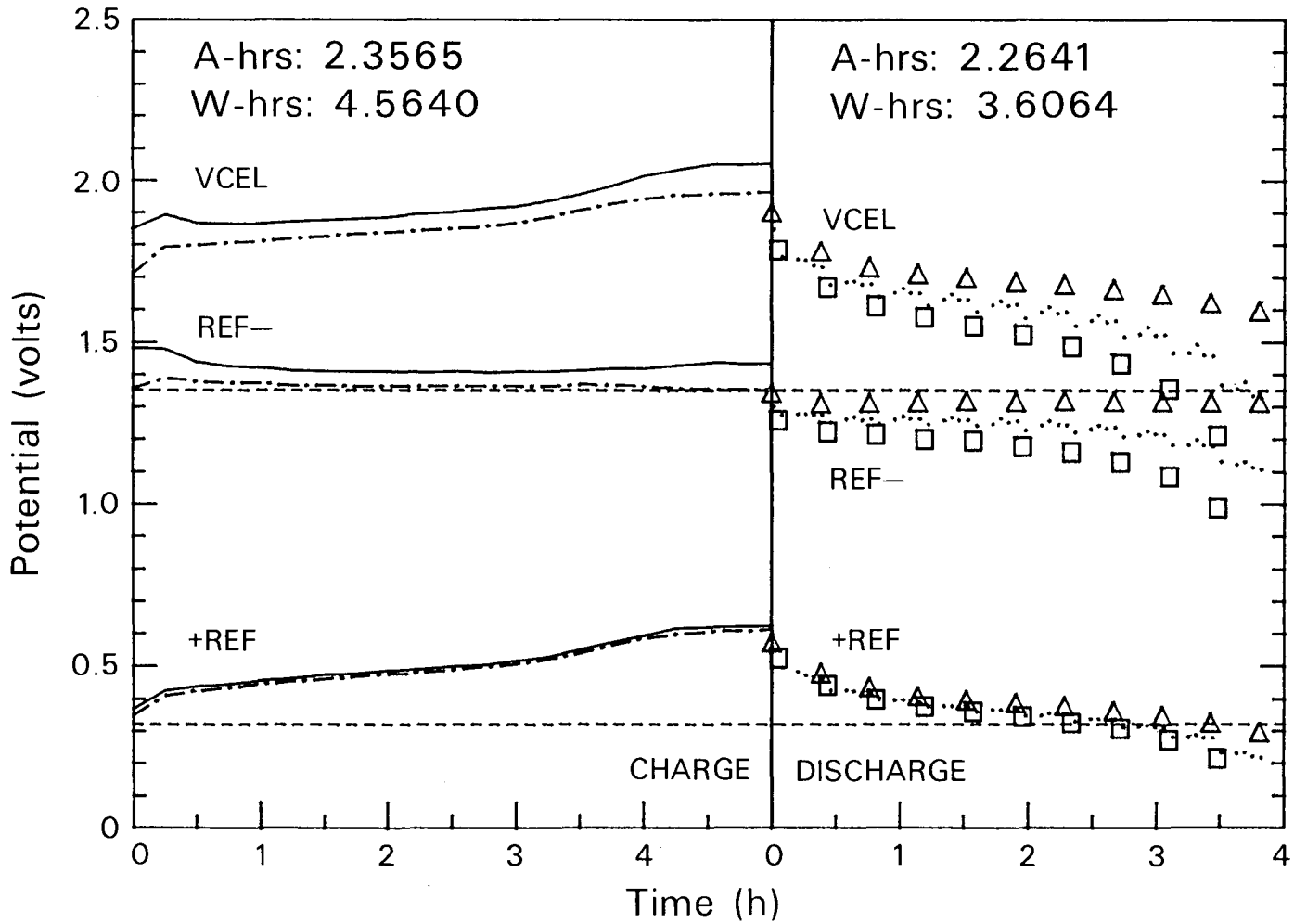

CELL VOLTAGE AND REFERENCE VOLTAGES FOR CYCLE 6 CELL 3A

XBL 821-1768

FIGURE 11

This report was done with support from the Department of Energy. Any conclusions or opinions expressed in this report represent solely those of the author(s) and not necessarily those of The Regents of the University of California, the Lawrence Berkeley Laboratory or the Department of Energy.

Reference to a company or product name does not imply approval or recommendation of the product by the University of California or the U.S. Department of Energy to the exclusion of others that may be suitable.

TECHNICAL INFORMATION DEPARTMENT
LAWRENCE BERKELEY LABORATORY
UNIVERSITY OF CALIFORNIA
BERKELEY, CALIFORNIA 94720