LBL-10084

CONF-791102--133

Lawrence Berkeley Laboratory

UNIVERSITY OF CALIFORNIA

Engineering & Technical Services Division

Presented at the 8th Symposium on Engineering Problems of Fusion Research, San Francisco, CA, November 13-19, 1979; also to be published in the Proceedings on the Conference

THE DIII NEUTRAL BEAM SHIELDING

MASTER

R. DeWitt and W. Low

October 1979

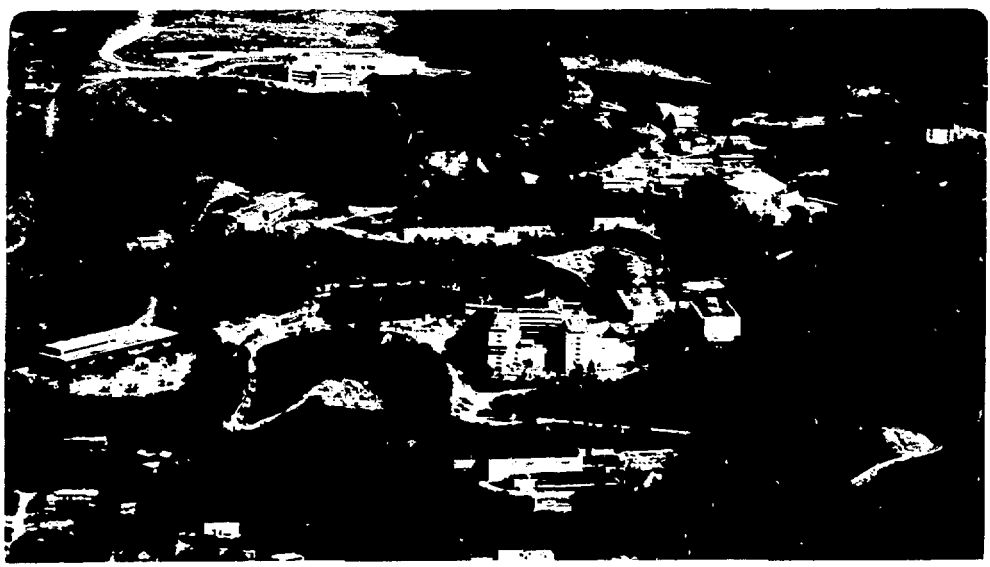

Prepared for the U.S. Department of Energy under Contract W-7405-ENG-48

DISCLAIMER

This book was prepared as an account of work sponsored by an agency of the United States Government. Neither the United States Government nor any agency thereof, nor any of their employees, makes any warranty, express or implied, or assumes any legal liability or responsibility for the accuracy, completeness, or usefulness of any information, apparatus, product, or process disclosed, or represents that its use would not infringe privately owned rights. Reference herein to any specific commercial product, process, or service by trade name, trademark, manufacturer, or otherwise, does not necessarily constitute or imply its endorsement, recommendation, or favoring by the United States Government or any agency thereof. The views and opinions of authors expressed herein do not necessarily state or reflect those of the United States Government or any agency thereof.

THE DIII NEUTRAL BEAM SHIELDING*

R. DeWITT and W. LOW
UNIVERSITY OF CALIFORNIA
Lawrence Berkeley Laboratory
1 Cyclotron Road
Berkeley, CA 94720

Introduction

It appears that neutral beam heating will be the most viable method of raising the temperature of a plasma for some time to come. In fact, neutral beams may continue to be one stage of the heating program indefinitely. However, the external field, called the fringe field, of a Tokamak can impair the effectiveness and operation of the ion source and beam. Remember, a Tokamak is a large, air-core transformer coupled with a solenoid.

The design process is summarized from start to finish. The source shield is used by way of example. Various parameters are examined and related to the design requirements. The different alloys are compared and the reader can follow the logic for the choice of material.

Design Requirements

The source extracts a beam of protons from a plasma.[1] Ions in a plasma are very sensitive to magnetic fields. Typically, fields must be held to 0.3-0.5 Gauss[2] in the plasma region and less than 2.0 Gauss along the beam. The basic field response to large objects in non-uniform, time dependent fields is very complex (see Fig. 1). Dr. Klaus Halbach solved that portion of the problem.

Initially, the shield (see Fig. 8) was designed to be a single-layer box around each source. The system would operate in pressurized sulphur-hexaflouride gas (see Fig. 9). However, the energy storage from the capacitance required a larger space between the high voltage source and the grounded shield. The adjacent source shield walls could not be moved any closer together, so the shield was enlarged to accomodate both sources. The larger section permitted air as the dielectric medium. The high voltage standoff distance caused the walls to move outward slightly for a 30% safety factor in "worst case" conditions due to the use of air.

Materials

Mild steel plate 1/2" thick was arbitrarily chosen for the first try. Unfortunately the steel reached its saturation level, so 3/4" thick plate was used. The heavier plate did not saturate, but the attenuated field was not going to improve much. The reason is shown in Fig. 2.[3]

The B-H curve, plotted on full logarithmic paper, demonstrates the problem. The H value remains nearly constant over a very large range of B values. Reducing the induction will not lower the internal field intensity significantly. The material needs to be changed to something with a lower intensity.

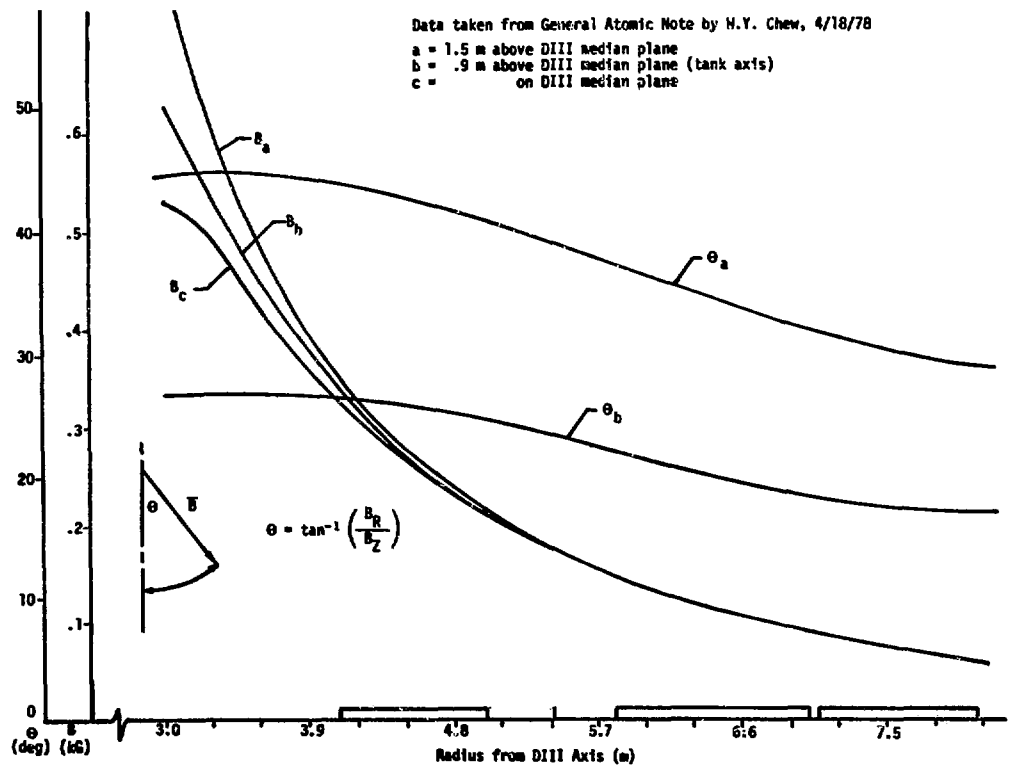

Fig. 1

TOKAMAK FRINGE FIELD

*This work was supported by the Division of Magnetic Fusion Energy, U.S. Department of Energy under Contract #W-7405-ENG-48.

DISTRIBUTION OF THIS DOCUMENT IS UNLIMITED

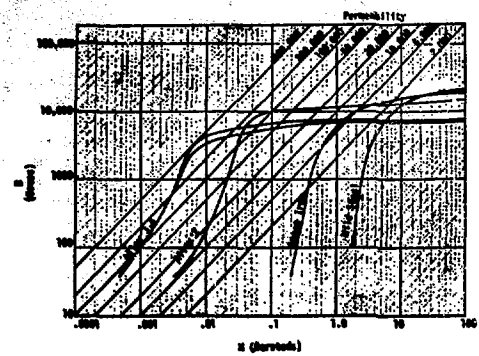

Fig. 2

PERMEABILITY CURVES FOR VARIOUS CLASSES

The next class of materials includes the ultra-low carbon steels, such as ingot iron and special silicon steels. While these materials are better than the others, the field intensity is still too high for large shields. They would be adequate for smaller shields, however, and deserve consideration even though the cost is higher than mild steel. This application requires the next lower class of materials!

The next class of materials are made from more expensive metals and require more expensive production methods. Some of this group of alloys are sensitive to the final direction of rolling, called oriented and grain-oriented materials. These may be useful in some instances, but exercise great care in shield design. This group includes a material called ASTM A753-78 Alloy 2, a non-oriented steel which was chosen.

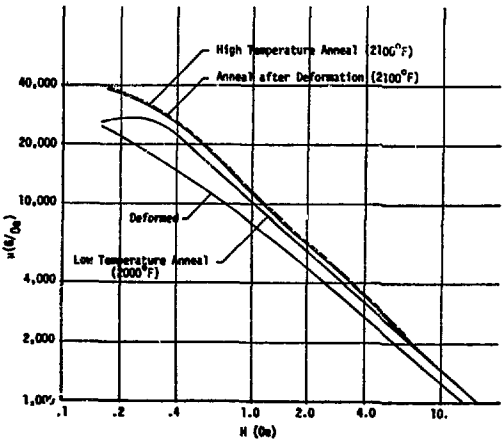

Fig. 3

MEASURED PERMEABILITY, ALLOY 2

Three characteristics deserve immediate notice for this group; the saturation level comes down, the price goes up, and the delivery becomes very long for non-standard sizes and shapes. Vendors can make non-standards, but don't put too much faith in stated delivery times. Things go awry and deliveries can take 6 months longer than estimated. Much of that time is for development. The high nickel alloys behave differently in heavier sizes than they do in lighter gages.

The higher prices relate to larger quantities of higher price metals being used in the alloy. Higher temperatures to melt the materials require longer furnace times, and special handling techniques as well as more energy to liquify and mix the materials. Several alloys need to be vacuum melted in an arc furnace and sometimes the alloy needs to be vacuum arc remelted (VRC). All of these things raise the price and require minimum quantities of several thousand pounds as well. The price in 1977 was $4.50/lb. as rolled, and had gone to about $6.00/lb. by early 1979. The price will probably be over $7.00/lb. for similar material by the time these proceedings arrive from the publisher.

Design Procedure

There are several methods of design that could be used. All of them are derived from the same set of equations. One version is presented hereand in Table II for the reader to follow:

$$\Phi = \Sigma_i \overline{B}_i \bullet \overline{A}_i \qquad \text{Faraday's Law} \qquad (1)$$

$$B_i = \mu_i H_i \qquad \text{B-H Graph} \qquad (2)$$

$$\mu_o I = \Sigma \overline{H} \bullet \overline{dl} \qquad \text{Ampere's Law} \qquad (3)$$

Here are the steps to follow (see Fig. 9):

1. Use Faraday's Law to find the incoming flux at every point.
2. Determine the field intensity at every point for a chosen material thickness (requires an accurate permeability curve).
3. Use Ampere's Law to find the new field value.
4. Repeat steps 1-3 until all anomolies disappear.

The system converges fairly rapidly. Judicious guesses will help, of course, from lots of practice. Assume a uniform field distribution on all faces equal to the external field for a first approximation.

Mechanical Properties

The basic pertinent mechanical properties are shown in Table I. Many pecularities exist between the sales brochures and the actual material, but room does not permit the exposition here.

Table I

Material	Mild Steel	Alloy 2	Alloy 3
Anneal Temp. (°F)	1,400	2,050	2,100
Chemical Comp. (bal.Fe)	0.1C	48Ni	78Ni4Mo
Permeability (annealed)	2,000	65,000	500,000
Tensile (PSI)	40,000	64,000	64,000
Modulus ($x10^6$)	30	22	25

Two things still had to be examined. First, what was the real permeability, and second, was the material strong enought to support itself over a long span at the annealing temperature. The real permeability tested up to μ = 40,000. However, the sample showed some very large crystals (see Fig. 4), which might affect its strength.

Therefore, two sets of samples were made for tensile tests. One set of samples was machined and tested, the other was annealed before testing. The annealed sample also developed large crystals. The samples were then pulled. The annealed sample turned into chunky-style peanut butter (see Fig. 5), while the room temperature sample looked the same as it had been (see Fig. 6). The results of the tensile tests are plotted (see Fig. 7) for comparison. Note that the initial yield strength of the annealed sample is significantly smaller than the unannealed one. The work done up to the ultimate yield level is also greatly reduced.

The reduced level could cause failure in the bolted joints. Even if the threads did not shear under load, they could conceivably creep enough to jam the bolt. A coarse test was rigged to find out how a real bolt would behave. A plate was drilled and tapped, then annealed, and bolts screwed in. The bolts were torqued

to the operating level for the bolt. A typical example would be 15 ft-lbs. for a 3/8" ϕ bolt. The bolt was indexed and watched on a dial indicator. The creep was about .002" over the first hour and then no more for three days. Then the bolt was torqued to the failure point. The same 3/8" bolt went to 70 ft-lbs. before the expected slip began. The torque wrench used was the inexpensive automobile type. Even so, a safety factor of 4 1/2 should be acceptable.

The mechanical strength was now known to be acceptable at room temperature after annealing, but what if that strength were much less at the elevated temperatures of annealing. Again, a quick and dirty test was devised. A bar was clamped on one end and loaded on the other. This classic case[4] was then annealed. The sag in the bar was treated as if it all occurred at the peak temperature. Working backwards, the modulus was found to be 4×10^6. This number was then used in examining the surface deflection of the shield instead of the 22×10^6 PSI found in the literature.

The support seemed marginally acceptable although the original assumption clearly gave some safety. However, the old addage about an ounce of prevention saving a pound of cure, and the drops from the cutting plate were added as support bars. These support bars are tack-welded in place using similar material for the welding rod. There will be no problems from thermal expansion. The bars will be cut out after annealing and the surface finish restored to smooth. The shield is now ready for the annealing process. It should be finished by the time these proceedings are published.

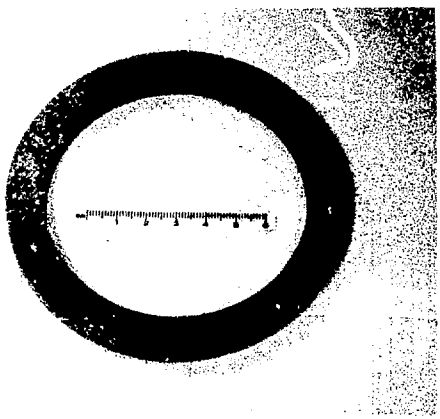

Fig. 4

PERMEABILITY SAMPLE

Summary

This material can be used alone in many instances as the entire shield. It has a high saturation level and a low residual field intensity level. It can be replaced by a mild steel outer shell and a thin sheet of Alloy 3 or Alloy 4 inner shield in other cases. Further information will be published later on how to machine and weld it conveniently.

The permeability data in Fig. 2 and 3 are from the literature. Actual values will vary from sample to sample, of course, but the values noted by these authors are very conservative. Measured values are worse by a factor of 2 - 3 from most tests made.

Acknowledgements

The authors would like to thank Dr. Klaus Halbach, Don Krieger of UCLBL and Joe Cobb of SLAC with their respective associates for help in collecting information and design corroboration.

References

1. K. Berkner, et al, "Performance of a Developmental 120-KeV, 10-A Deuterium (14-A Hydrogen) Neutral Beam System", 7th Symposium on Engineering Problems of Fusion Research, Knoxville, TN, 1977
2. Private Communication, K. Ehlers, 1978
3. Data extracted from Allegheney-Ludlum "Magnetic Shielding", 1974 and from U.S. Steel "Non-Oriented Electrical Steels"
4. Roark and Young, "Formulas for Stress and Strain", McGraw-Hill, 5th Edition, pg. 96, case 1a, San Francisco, 1975

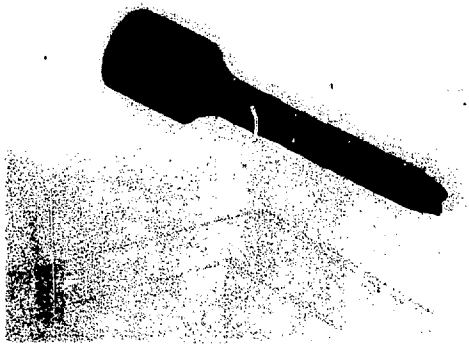

Fig. 5

ANNEALED TENSILE SAMPLE

Fig. 6

UNANNEALED TENSILE SAMPLE

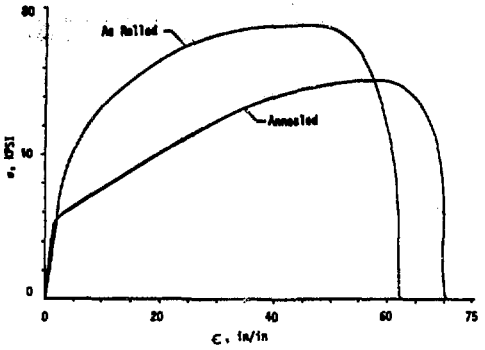

Fig. 7

STRESS-STRAIN CURVES

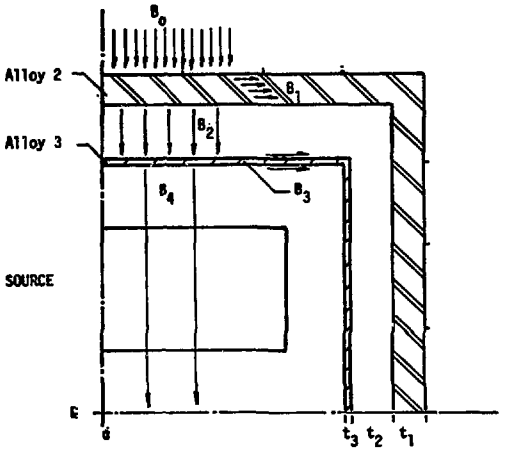

Fig. 9

SOURCE DESIGN SKETCH
(Inner 2 layers only)

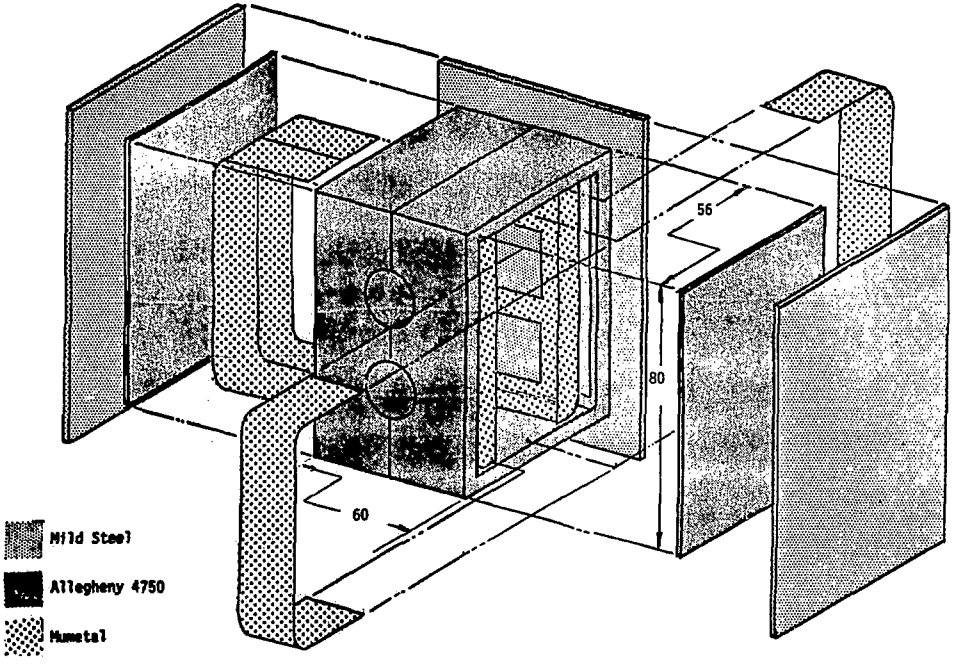

Fig. 8

THREE LEVEL SOURCE SHIELD

TABLE II. Sample Calculation

N	Bo	Ø	B(s)	H*L	Bi
0	-	-	-	73.68	-
1	80	1728	1589	63.94	3.34
2	80	3560	3179	59.52	2.99
3	80	5340	4768	55.09	2.78
4	80	7120	6357	48.45	2.51
5	80	8900	7946	44.25	2.25
6	80	10680	9536	32.08	1.85
7	80	12460	11125	19.91	1.26
8	80	14240	12714	-	.48

N Test point number
Bo External Field, Gauss
Ø Flux inside material, Gauss-inches
B(s) Induction in material, Gauss
H*L Field Intensity, Oersted-inches
Bi Field inside shield, Gauss

Bi becomes the Bo for the next shielding layer.