182
10/16/80 T.J

Dr. 1845

LBL-10552
UC-38

Lawrence Berkeley Laboratory
UNIVERSITY OF CALIFORNIA

Engineering & Technical Services Division

THE TPC MAGNET CRYOGENIC SYSTEM

M.A. Green, W.A. Burns, J.D. Taylor, and H.W. Van Slyke

March 1980

MASTER

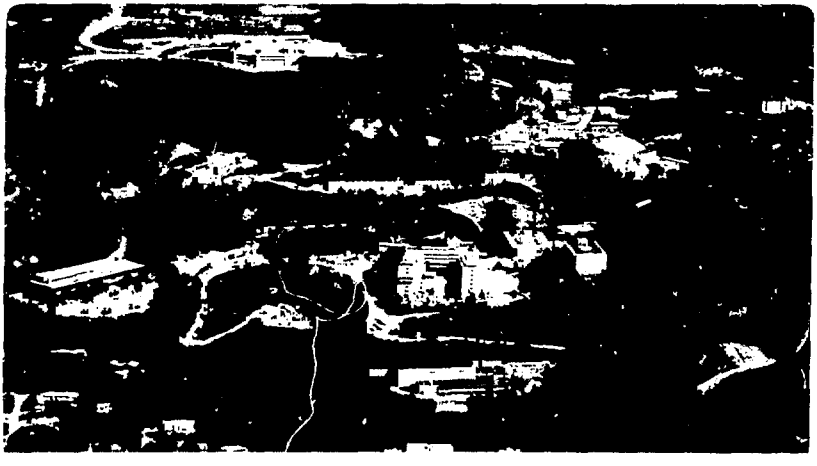

Prepared for the U.S. Department of Energy under Contract W-7405-ENG-48

LBL-10552

THE TPC MAGNET CRYOGENIC SYSTEM

M. A. Green, W. A. Burns, J. D. Taylor, and H. W. Van Slyke

Engineering and Technical Services
Lawrence Berkeley Laboratory
University of California
Berkeley, CA 94720

DISCLAIMER

Table of Contents

page

INTRODUCTION 1

1. HEAT LEAKS INTO THE COIL PACKAGE AND COMPENSATION SOLENOIDS . 3

a. Heat Leaks through the Superinsulation 3

b. Heat Leaks Through the Support Rods 10

c. Conductive Heat Leaks Down Electrical Leads 14

d. Heat Leaks to the Compensation Solenoids 15

2. HEAT LEAKS TO OTHER COMPONENTS OF THE CRYOGENICS SYSTEM . . . 17

a. Liquid Nitrogen Shields 17

b. Cryostat Vacuum Pumping System 19

c. Liquid Helium and Liquid Nitrogen Transfer Lines 21

3. THE CONTROL DEWAR AND ITS RELATIONSHIP TO THE REST OF THE SYSTEM. 26

a. The Control Dewar 29

b. The Liquid Helium Pump 33

c. Thermodynamics of the Control Dewar and Magnet Cooling System 39

d. Pressure Drops in the Helium Cooling System 49

4. THE CONDITIONER SYSTEM AND ITS ROLE IN COOLING THE TPC MAGNET. 58

a. The Conditioner Dewar 58

b. The Conditioner Heat Exchangers 60

c. Heat and Mass Balance of Conditioner Circuit Delivering 80 K Helium 62

d. The Gas Heaters 63

e. Cool-Down and Warm-Up of the TPC Magnet System 66

5. GAS-COOLED ELECTRICAL LEADS AND CHARGING LOSSES 73

a. Gas-Cooled Electrical Leads 73

b. Heating While Charging the TPC Magnet 80

6. SUMMARY OF LIQUID HELIUM AND LIQUID NITROGEN REQUIREMENTS OF THE TPC SUPERCONDUCTING MAGNET SYSTEM 84

a. Summary of Liquid Helium Refrigeration Requirements . . . 85

b. Summary of Liquid Nitrogen Refrigeration Requirements . . 92

7. CRYOGENIC SYSTEM TESTS 95

a. Tests of the Cryogenic Subsystems 95

b. The May 1980 Test of the TPC Magnet Cryogenics 100

ACKNOWLEDGMENTS 108

REFERENCES 109

THE TPC MAGNET CRYOGENIC SYSTEM

M. A. Green, W. A. Burns,
J. D. Taylor, and H. W. Van Slyke

Engineering and Technical Services
Lawrence Berkeley Laboratory
University of California
Berkeley, CA 94720

INTRODUCTION

The concept of two-phase forced cooling is relatively new, although small experiments with it were run during the early 1970s at LBL, Rutherford, and Grenoble. These efforts have not to our knowledge been reported in the literature. Two-phase cooling was first described when LBL proposed it for the MINIMAG experiment.[1] The key element in making this process viable is the control dewar with its heat exchanger. From the very beginning, the LBL thin superconducting coil program has used forced two-phase tubular cooling as the cooling system of choice. The first experimental data were reported in May 1976.[2] When the Time Projection Chamber (TPC) experiment was proposed in 1976, the concept of a forced two-phase cooled, two-meter-diameter thin solenoid was brought forth.[3] This report discusses the cryogenic system developed for the TPC magnet.

The TPC magnet and its compensation solenoids are adiabatically stable superconducting solenoid magnets. Direct contact of the liquid helium with the superconductor is not required. As a result, tubular cooling appeared to be attractive. Forced two-phase cooling offers advantages over both single-phase forced tubular cooling and the

boiling helium bath. The TPC magnet system has forced flow cooling of the two cryogens in the system. The liquid helium and liquid nitrogen are delivered through the cooled load by forced tubular flow. The only reservoirs of liquid cryogen exist in the control dewar (for liquid helium) and the conditioner dewar (for liquid nitrogen).

This report describes the operation of these systems during virtually all phases of system operation. Photographs and diagrams of various system components are shown, and cryogenic system data are presented in the following sections: 1) heat leaks into the TPC coil package and the compensation solenoids; 2) heat leaks to various components of the TPC magnet cryogenics system besides the magnets and control dewar; 3) the control dewar and its relationship to the rest of the system: 4) the conditioner system and its role in cooling down the TPC magnet; 5) gas-cooled electrical leads and charging losses; and 6) a summation of the liquid helium and liquid nitrogen requirements for the TPC superconducting magnet system.

1. HEAT LEAKS INTO THE TPC MAGNET COIL PACKAGE AND COMPENSATION SOLENOIDS

The TPC coil package, which is 3.4 m long and has an inside diameter of 2.142 m, will be the heat sink for all heat leaking from the vacuum vessel to the 4 K region. In general, three types of heat leaks must be dealt with. They are: 1) radiation and conductive heat transfer through the multilayer insulation, 2) heat conduction down the support rods from room temperature to the 4 K region, and 3) heat conduction down various instrumentation and electrical leads. The refrigeration content of the helium, which is fed into the gas cooled electrical leads, is discussed in Section 3.

a. Heat Leaks through the Superinsulation

The TPC magnet, like virtually all liquid helium temperature devices, is insulated by an evacuated multilayer insulation system, which is often called superinsulation. The predominant mode of heat transfer through such an insulation system is by radiation heat transfer. Secondary heat transfer methods are gas conduction by free molecular flow and contact-conductive heat transfer through the layers themselves and the nylon netting between some of the layers. Table 1 shows the heat flow through various practical insulation systems.

The TPC magnet coil package has the following insulation system: 1) approximately 30 layers of superinsulation between room temperature (300 K) and 80 K, 2) a liquid nitrogen temperature shield (about 80 K), and 3) approximately 20 layers of superinsulation between the 80 K surface and the liquid helium temperature surface (4 K). The superinsulation consists of loosely packed, crinkled aluminized Mylar

Table 1. Heat flow through various insulation systems (Refs. 1, 4, 5).

Insulation system	Heat flow (Wm^{-2}) 300 to 4 K No intermediate shield	80 to 4 K 80 K intermediate shield
Vacuum ε = 1.0	465.0	2.3
Vacuum ε = 0.5	152.0	0.76
Vacuum ε = 0.2	50.6	0.26
Vacuum ε = 0.1	23.8	0.12
Superinsulation[a]		
ε = 0.02 for each layer		
1 layer	8.0	0.07
5 layers	3.0	0.025
10 layers	1.5	0.015
20 layers	0.8	less than 0.01 unless compacted
50 layers	0.4	
Powder insulation evacuated expanded perlite with a density of 0.08 to 0.1 g/cm^3, layer 15 cm thick	~1.3	~0.2 (no better than vacuum)

[a]Typical values of heat leak can be calculated using Table 1. To calculate the minimum theoretical value of heat leak through the insulation, use Eq. (1).

with a fine, bridal-veil mesh every 3 layers or so. Table 1 shows the approximate average heat leak through such insulation, and Fig. 1 shows a cross section of the cryostat and coil package. This figure shows the nitrogen temperature (80 K) shield location.

Typical values of heat leak can be calculated using Table 1. If one wants to calculate the minimum theoretical value of heat leak through the insulation one can use the following expression:

$$Q/A = \Lambda\sigma\left[T_1^4 - T_2^4\right] \tag{1}$$

where

$$\Lambda = \frac{F_{1\to 2}}{N}\,\frac{\varepsilon^2}{\varepsilon + (1-\varepsilon)\varepsilon} \tag{1a}$$

and when ε is small

$$\Lambda = \frac{F_{1\to 2}\,\varepsilon}{2N} \tag{1b}$$

where Q/A is the heat transferred per unit area; σ the Stefan Boltzmann constant ($\sigma = 5.67 \times 10^{-8}$ Wm^{-2} K^{-4}); T_1 is the absolute temperature of the warm surface; T_2 is the absolute temperature of the cold surface; ε is the average emissivity of the superinsulating layers; $F_{1\to 2}$ is the form factor for a radiative heat transfer; and N is the number of layers of superinsulation.

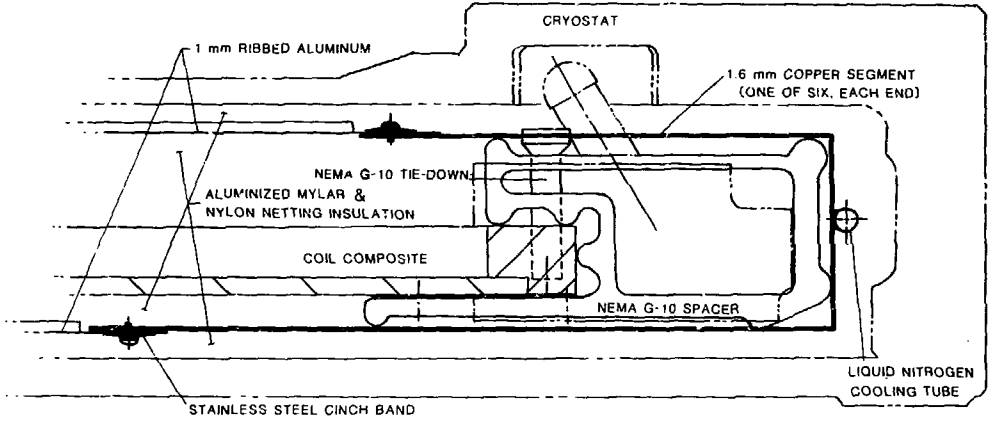

XBL 802-8403

Fig. 1. TPC coil package cross section showing the liquid nitrogen shield at the end of the magnet.

The derivation of Eq. (1) can be found in Ref. 5. For our problem, $F_{1\to 2}$ is about 1.0 (Ref. 6) and $\epsilon \approx 0.02$ to 0.05. The values of the heat leak per unit area given in Table 1 are about a factor of 3 to 5 higher than the ones given by Eq. 1. This factor of 3 accounts for errors of insulation, spurious conductive heat transfer and changes in emissivity of the layers.

The total heat leak into the TPC magnet can be found using the following expression:

$$Q_R = \frac{Q}{A} 2\pi DL \tag{2}$$

where Q_R is the total radiation heat transfer to the TPC magnet coil package, Q/A is defined by Eq. (1) or the values given in Table 1; D is the average diameter of the coil package (in our case, $D \approx 2.2$ m); and L is the average coil length (in our case, $L \approx 3.6$ m). The value of $2\pi DL$ is the total average surface area of the coil package assembly. This area in the TPC magnet is about 49.8 m^2.

Using Eq. (2), we find that the most probable value of the heat leak through the insulation is about 0.5 W when the liquid nitrogen shields operate. However, we add 2.5 W to the 0.5 W to account for installation error; thus the most probable heat leak is 3.0 W. When there is no liquid nitrogen in the shield, the most probable heat leak rises to about 20 W. Table 2 shows the relationship of the cryostat heat leak to other heat leaks in the system. Figure 2 shows the TPC coil after superinsulation has been applied.

Table 2. Heat leaks into the TPC coil package and into the liquid nitrogen system.

	Liquid helium temperature heat leaks at 4.5 K (W)			LN_2
	Minimum	Most probable	Maximum (no LN_2)	Heat Leak at 80 K (W)
Heat leaks through the superinsulation	1.0	3.0	20.0	~30
Heat leaks through the support struts	2.4	4.8	17.8	~75
Heat leaks through[a] electrical leads	0.7	3.0	~13.5	~15
Total heat leak to the coil package	4.1	10.8	~51.3	~120

[a] The minimum case includes no heat leak down the gas cooled leads, the most probable case includes 2 W, and the maximum case, 6 W.

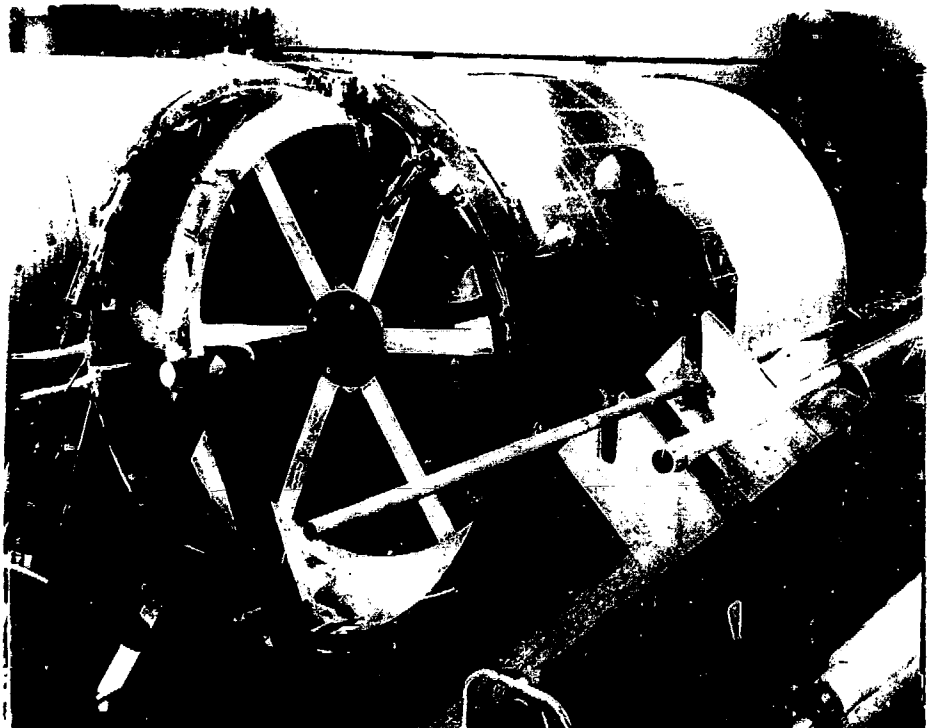

CBB 801-339

Fig. 2. The TPC magnet coil package after the superinsulation has been applied. The outer 80 K shield is being installed.

b. Heat Leaks through the Support Rods

The TPC coil package is supported to the outer cryostat by a bicycle spoke type support system which has six support points at each end of the cryostat.[7] Two types of support rods are to be used. Four support points at each end have radial support rods (see Fig. 1). Two support points at each end have antirotation support rods. Each radial support point has one compression strut which is 79.4 mm long; and each antirotation support point has two compression struts which are 104.8 mm long.[8] (These are the lengths between the end balls and are the lengths important for heat leak calculations. There are eight struts of each type. Figure 3 shows another end view of the TPC magnet. The support struts and electrical leads are shown.

Each compression strut has a liquid nitrogen temperature thermal intercept. This intercept is located about 50 mm from the cold end of the short struts and about 75 mm from the cold end of the long struts. After much study, it has been decided to make the compression struts out of 25.4 mm (1 inch) diameter rods of NEMA G-10CR epoxy fiber glass.

The heat conduction down the struts can be determined using the following equation:

$$Q_c = \frac{\Gamma A_c}{L} \tag{3}$$

where Q_c is the heat leak down the support strut; A_c is the cross sectional area of the strut; and L is the length of the strut. The Γ

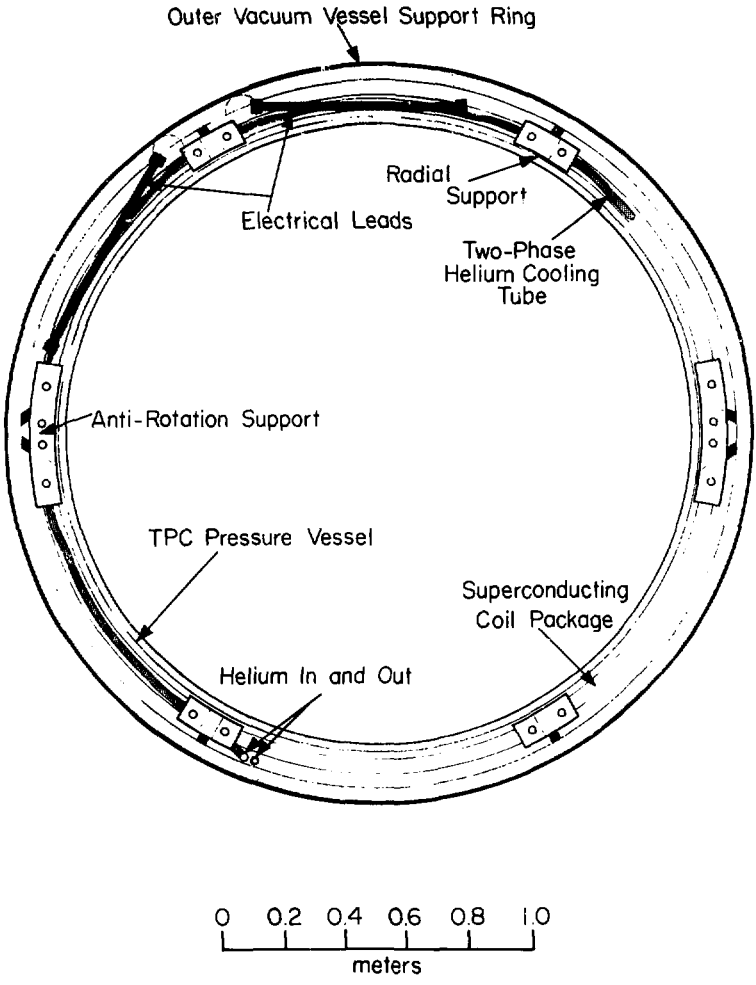

XBL 786-9265

Fig. 3. End view of the TPC magnet from the north, showing the location of major services.

term is the thermal conductivity integral between the temperatures T_1 and T_2 and the rod ends. A mathematical expression for Γ can be given as follows:

$$\Gamma = \int_{T_2}^{T_2} k(T)dT \tag{3a}$$

where T_1 is the cold-end temperature; T_2 is the warm-end temperature; and $k(T)$ is the thermal conductivity (as a function of temperature) of the material used to make the struts. Table 3 shows the thermal conductivity integrals for various materials used for cryostat support systems.[4,9]

Using Table 2, one can calculate the projected heat leaks through the struts. The liquid nitrogen intercept is assumed to be a piece of copper clamped to the rod and a liquid nitrogen tube. Using Eq. 3 and the values of Γ given in Table 2 for fiber-glass expoxy, the following heat leaks are calculated for each of the struts:

Short strut heat leak to 4 K with no nitrogen	= 1.27 W
Long strut heat leak to 4 K with no nitrogen	= 0.96 W
Short strut heat leak to 4 K with nitrogen	= 0.182 W
Long strut heat leak to 4 K with nitrogen	= 0.122 W
Short strut heat leak to liquid nitrogen	= 4.76 W
Long strut heat leak to liquid nitrogen	= 4.63 W

Table 3. Heat-transport properties of support-system materials (Ref. 9).

Material	Thermal conductivity integrals (Wm^{-1}) 80 K to 4 K	300 K to 4 K	Maximum design stress[a] (Nm^{-2})
Tension-Rod Materials			
Titanium	200	1650	2.0×10^8
304 Stainless Steel	320	3060	1.5×10^8
Fiber-glass epoxy[b]	18	199	1.0×10^8
Compression-Member Materials[c]			
Fiber-glass epoxy	18	199	1.5×10^8
Nylon	13	89	0.5×10^8
Undusted washers, 302 stainless steel 0.0008 in. thick	5	56	0.1×10^8
Dusted washers, 302 stainless steel, 0.002 in. thick (dust MnO_2)	1	9.5	0.1×10^8

[a] 10^8 Nm^{-2} = 14550 psi.

[b] Beware of creep with long-term use.

[c] Check the rods for Euler buckling.

The maximum possible support strut heat leak will occur when the liquid nitrogen system is shut off. The support heat leak with no nitrogen will be about 17.8 W. When the liquid nitrogen system is operating, the most probable support strut heat leak will be about 4.8 W. The most probable support strut heat leak is assumed to be about 2 times the minimum heat leak calculated using the figures above. (This allows for a non-even distribution of heat at the liquid nitrogen intercept point.) The estimated heat leak to the liquid nitrogen intercepts is about 75 W.

c. Conductive Heat Leaks Down Electrical Leads

The heat leak calculations for the major non-gas cooled leads is discussed in Ref. 10. These leads include the center tap lead and the ultra-pure aluminum circuit leads. There is one center tap lead and two loads are assumed for the ultra-pure aluminum coil. The major non-gas cooled leads are assumed to have a liquid nitrogen temperature intercept. The calculated heat leak based on a 0.2 m length of lead between 80 K and 4 K is 0.1 W for the center tap wire and 0.5 W for the ultra-pure aluminum circuit wire.

In addition to heat leak down the major non-gas cooled leads, there are 50 signal wires which connect to cable connectors on coil. If these wires in the cable are Number 26 wire with a distance of 0.4 m to a liquid nitrogen intercept, the heat leak down the cables is about 1 W. One can substitute Constantan or stainless steel for copper and reduce the heat leak to less than 0.2 W. We use a most probable value of 0.4 W.

The gas-cooled leads may leak as much as 6 W into the system. Most of the 6 watts never reaches the magnet because it boils the liquid helium that is fed into the gas-cooled leads from the bus bar. Probably less than 2 W is actually transmitted to the magnet directly.

d. Heat Leaks to the Compensation Solenoids

The two compensation solenoids are located at the ends of PEP-9. These superconducting magnets are to compensate for the effect of the solenoidal field on the beam. Compensation solenoids are used instead of a skew quadrupole, permitting compensation without introducing beam depolarization. The compensation solenoids are 1.45 m long (in overall length) with an average diameter of 0.35 m.[10]

Using Eq. (2), one can see that the compensation solenoids (both magnets) will have 6.4 m^2 of insulation area. Therefore, the heat leak through the insulation is of the order of 2.1 W when a nitrogen temperature shield is used. (Note: there is not much space at the inner bore of the magnet, so we assume there is no nitrogen shield on the inner bore.) The expected heat leak to the liquid nitrogen system is about 8 W for both magnets. The worst case heat leak to the compensation solenoids through the superinsulation (when the liquid nitrogen system fails) is around 4 W.

The support system for the compensation magnet coils is designed for a load of only 2 metric tons instead of the 20 metric tons that the main TPC magnet is designed for. As a result, the estimated support heat leak for both magnets is around 6.0 W (the minimum value is around 4.5 W). It is assumed that there is no liquid nitrogen point on the support struts.

The compensation solenoid will be powered through the 500 A gas-cooled electrical leads. The heat leak down the leads (for both magnets) is around 1.5 W. There are several instrumentation leads on the compensation solenoids for silicon diode thermometers and voltage taps. It is estimated that the instrumentation leads contribute about 0.5 W to the total heat leak into the compensation magnets.

The most probable heat load to the compensation magnets is expected to be about 10.1 W when the liquid nitrogen system is working. The heat load could be as small as 7.0 W. If the nitrogen system should fail the estimated heat load to the compensating solenoids is 13.5 W. The liquid nitrogen circuit is expected to have around 30 W of heat input at 77 K. It should be noted that this estimate does not include the gas usage for the electrical leads (see Section 4) or the extra 45 m of transfer line for the magnets. The extra transfer line will contribute about 11 W (if the liquid nitrogen is running). The compensating solenoids increase the amount of transfer line needed from about 40 m to 85 m. (Section 2c describes the liquid helium transfer lines to be used in the TPC magnet system).

2. HEAT LEAKS TO OTHER COMPONENTS OF THE CRYOGENICS SYSTEM

The main components of the TPC magnet cryogenics system are the CTi Model 2800 refrigerator, the control dewar, and the coil packages themselves. This section describes other components besides the primary components. These include the liquid nitrogen shields for the TPC magnet coil package, the vacuum pumping system for the TPC cryostat and the liquid helium-liquid nitrogen transfer lines.

a. Liquid Nitrogen Shields

The TPC magnet is a thin solenoid in its center section. As discussed in the previous section, the use of liquid-nitrogen-cooled shields and support points is entirely justified because they reduce the heat leak by a factor of 6. The shields also permit one to make mistakes in insulating the coil package without paying dearly in refrigeration.

Since the TPC magnet is designed to be thin in terms of radiation thickness, one cannot make the shield thick or from dense metals such as copper. The approach chosen for the TPC magnet is a shield made from sheets of 1 mm thick 1100 aluminum. The ends of the shield are made from copper 1.59 mm (1/16 in.) thick welded together and soldered to round copper tubes. Figure 1 shows how the nitrogen temperature shield is built at the end of the coil package.

Our calculations of heat leak through the superinsulation assume that the temperature of the shield is constant. This assumption is not entirely necessary. If the shield is at any temperature from 77 K to 120 K, it will function perfectly well. The temperature drop from

the center of the shield to the cooling tube can be as much as 40 K, but the nitrogen temperature intercepts on the support should be at a temperature closer to 80 K. The support struts should be connected directly to the liquid nitrogen pipe with a copper strap.

The temperature drop from the center of the nitrogen temperature shield to the cooling tube can be calculated using the following expression[11,12]

$$\Delta T = (Q/A)\left[\frac{L_1^2}{2k_1t_1} + \frac{L_2^2}{2k_2t_2} + \frac{L_1L_2}{k_2t_2}\right]$$

where ΔT is the temperature drop from the center of the shield to the liquid nitrogen pipe. Q/A is the heat flux on the shield as calculated by Eq. (1) or using Table 1. L_1 is the length of the center section of the shield to the edge of the 1100 aluminum plate attached to the copper plates, and L_2 is the length of the copper plate from the edge of the 1100 aluminum plate to the liquid nitrogen temperature cooling tube. The t_1 is the thickness of the 1100 aluminum plate, and t_2 is the thickness of the copper plate. The k_1 is the thermal conductivity of the 1100 aluminum plate and k_2 is the thermal conductivity of the copper plate.

Using the following value for the various constants in Eq. (4)[13]

$L_1 = 1.65$ m

$L_2 = 0.4$ m

$t_1 = 1 \times 10^{-3}$ m

$t_2 = 1.59 \times 10^{-3}$ m

$k_1 = 300\ W\ m^{-1}$

$k_2 = 500\ W\ m^{-1}$

$Q/A = 0.6\ W\ m^{-2}$ (with 30 layers of superinsulation)

One thus calculates the following temperature drop ΔT:

$\Delta T = 3.26\ K$

In the shield the actual temperature drop is more than this value because there is contact resistance between the 1100 aluminum and the copper plates.

b. Cryostat Vacuum Pumping System

The TPC magnet cryostat vacuum vessel is a welded structure except where the main electrical leads pass through the vacuum vessel to the outside world. There will be room temperature rubber O-rings between the outside air and the vacuum at these points. The helium is carried in tubes inside the coil package. All joints in the tubular cooling system are either welded or silver brazed. The most vulnerable parts of the tubular cooling system are the ceramic insulators that hold off the voltages across the magnet electrical leads. The forced two-phase tubular cooling system is good for a pressure of at least 70 atm.

The primary vacuum pumping system is a cryoadsorption pumping system with a mechanical roughing pump as a backup. We use a Varian Megasorb pump as the primary pump. We have found that it will pump all gases, but its ability to pump neon, hydrogen and helium is very limited. The procedure recommended for pumping the main cyrostat vessel is as follows: 1) pump the vessel down to 100 microns with a

mechanical pump; 2) backfill with dry nitrogen gas (gas made from boiling liquid nitrogen) to 1 atm; 3) pump the vessel to the lowest possible level using the cryoadorption pump; 4) repeat steps 2 and 3 as necessary, but cleaning the pump between pumping and purging is recommended; 5) if the cryoadsorption pump cannot pump the dry-nitrogen-filled vacuum space to 10^{-4} Torr or lower, pump the vessel with a mechanical pump to 1000 microns, then pump the vessel down with a fresh regenerated pump. Our experience with the cryoadsorption pumps indicates that one should have no trouble getting pressures of 10^{-4} Torr or lower, once the condensibles (i.e., water) have been pumped out or frozen on the nitrogen shield.

The high-vacuum pumping system for helium, which is required because of small leaks in the tubular cooling system, consists of copper cans of Lindi molecular sieve 5A. Some 20-30 kg of getter material was installed around the ends of the TPC magnet. The getter will be cooled to 4.5 K by conduction to the magnet coil package. Space is provided for a 4-inch diffusion pump to be used as a backup system. The diffusion pump is not very effective because of the severe conductance limitation imposed by vacuum piping out through the TPC magnet iron.

The molecular sieve getter is capable of pumping large amounts of helium gas when it is cooled to 4.5 K. Nitrogen and other gases will cryopump directly to the surface of the magnet coil package. The 20-30 kg of 5A molecular sieve will pump 500-700 g of helium before the pressure in the cryostat is raised above 2×10^{-6} Torr.[14]

Small helium leaks won't even be seen as long as the magnet is cold. Problems will arise when there is a magnet quench because the helium captured by the getter will be released into the vacuum space. The back-up mechanical pump and diffusion pump will be used to bring the pressure back down so that the magnet can be recooled.

c. Liquid Helium and Liquid Nitrogen Transfer Lines

The TPC magnet with its two compensation solenoids will have about 85 m of liquid helium refrigeration transfer line. Since long lengths of transfer lines are involved, the transfer line has a liquid nitrogen trace. After some study, it was decided that the liquid nitrogen for the magnet shields would be the trace for the transfer lines. As a result, a design evolved in which the liquid nitrogen and liquid helium are carried in the same transfer lines.

The transfer lines are designed to be semiflexible. They can be bent over about a 1 meter bend radius when at room temperature. The flexibility built into the lines permits one to route the line effectively from the control dewar to the magnets. Figure 4 shows an approximate routing diagram for the transfer lines Having a flexible line permits the valves on the TPC magnet control dewar to be activated. This is needed because the ends of the transfer lines are part of the valves for controlling flow into and out of the control dewar.

The long transfer lines are unique in their design. The vacuum space for the transfer line is contained within corrugated pipe about 76 mm in diameter. Within the vacuum space are three liquid carrying

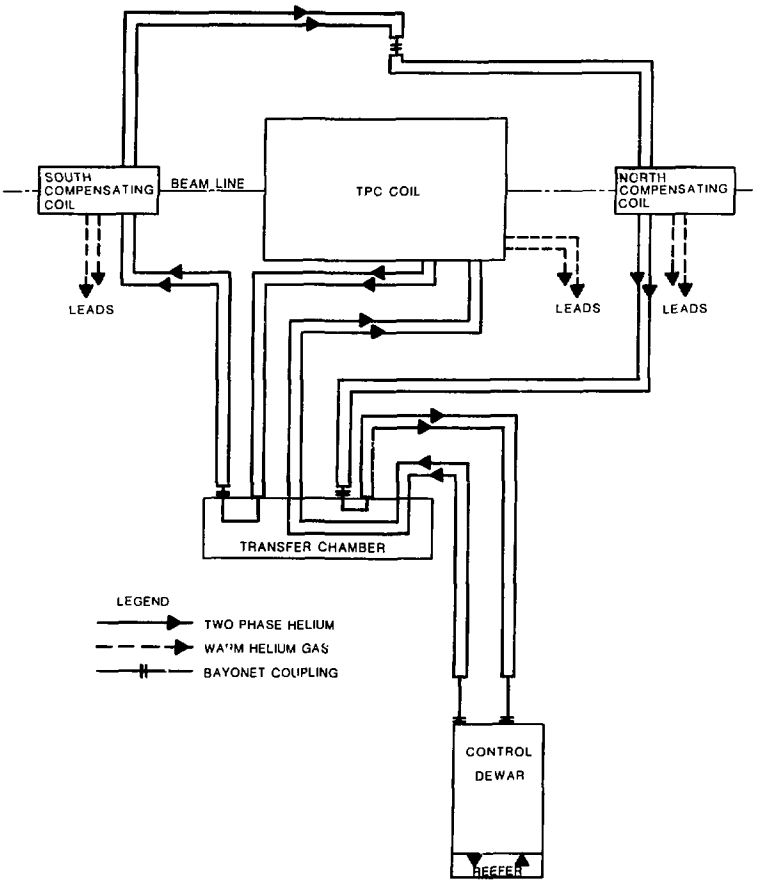

XBL 802-8404

Fig. 4. Helium flow diagram for the TPC magnet cryogenic system (includes compensation solenoids).

lines. Two lines that are 12.7 mm in outside diameter carry two-phase helium. The third line, also 12.7 mm OD, carries liquid nitrogen. The liquid helium lines are bound together with a woven fiber-glass tube full of molecular sieve. The two helium carriers are insulated with about 20 alternating layers of aluminized Mylar and bridal veil netting. The bundle is wrapped with heavy duty aluminum foil; the third tube, the nitrogen carrier, is put beside the bundle of two. The three tubes are twisted to form a cable. The bundle of three is wrapped with aluminum foil. The wrapped bundle is insulated with 30 more layers of alternating bridal veil netting and aluminized Mylar. A cross-section of the TPC magnet transfer lines is shown in Fig. 5.

Single tube transfer lines similar in design to the TPC transfer lines have been built at LBL.[15] The heat leak in these lines, which have no nitrogen temperature trace, is about 0.3 W m^{-1} plus the bayonet joints at the ends. The TPC lines without the liquid nitrogen trace should have a heat leak of 0.5 to 0.6 W m^{-1} plus about 1 watt for each bayonet joint. (There are five bayonet joints). When liquid nitrogen is carried in the third tube, the transfer line heat leak is expected to be reduced to a minimum heat leak of 0.10 W m^{-1}, with the most probable heat leak around 0.20 Wm^{-1}. The heat leak at the bayonet joints is expected to be between 0.3 and 0.5 W per joint. The expected heat leaks for the for the shielded transfer lines are:

Minimum heat leak	≈10.3 W
Most probable heat leak	≈20.0 W
Maximum heat leak without nitrogen	≈57.0 W
Heat leak to the liquid nitrogen circuit	≈120.0 W

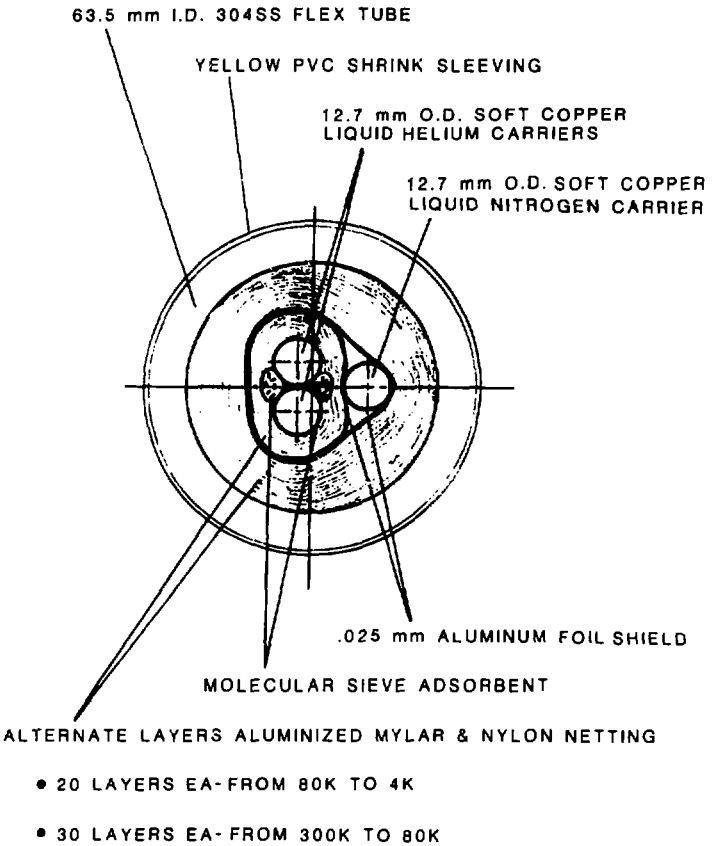

XBL 802-8400

Fig. 5. A cross section of the TPC magnet nitrogen traced transfer lines.

The total heat leak in the transfer lines is expected to be greater than the heat leaks through the magnet cryostat vessel.

The final set of transfer lines to become part of the TPC magnet system is a pair of nonshielded transfer lines between the CTi Model 2800 refrigerator and the control dewar. Each of these two lines is about 4.5 m long with a bayonet joint at each end. These lines are flexible, just as the main transfer lines are. The expected heat leak for the lines is about 0.3 to 0.6 W m^{-1} plus 0.5 to 1.0 W for bayonet joints. The expected heat leak for the transfer lines which connect the refrigerator to the control dewar is:

Minimum heat leak	≈3.8 W
Most probable heat leak	≈5.7 W
Maximum heat leak	≈7.8 W

3. THE CONTROL DEWAR AND ITS RELATIONSHIP TO THE REST OF THE SYSTEM[16,17]

The control dewar is the key element in the TPC magnet cryogenic system. It performs the following functions: 1) it holds most of the liquid helium in the cryogenic system and all of the reserve liquid helium (176 liters versus about 90 liters in the TPC magnet, compensation solenoids, and transfer lines); 2) it insures that there will always be liquid in the two-phase cooling coils in the magnets even when the short-term heat load at the magnet coils is as much as 50 percent greater than the rate of refrigeration; and 3) it insures that the pressure drop through the magnet cooling tubes is minimized. (The control dewar minimizes the quality of the helium flowing in the cooling circuit, which reduces the pressure drop by a factor of 3 or more).

Two kinds of systems can be used to circulate low-quality helium through the magnet cooling tube. They are: 1) a liquid-helium pump used as a circulator, or 2) the refrigerator compressors used as a circulator. Both systems use a heat exchanger to insure that the helium will enter the system at or near the saturated liquid line. Figure 6 shows schematic diagrams of the two approaches.

The helium pump loop system shown in Fig. 6a has these advantages: 1) The refrigerator is completely decoupled from the load. In theory, one could substitute liquid helium from a storage dewar for the refrigerator. 2) The mass flow through the system is limited by the capacity of the pump, not the capacity of the refrigerator. But the system also has two disadvantages: 1) The pump work is put into the

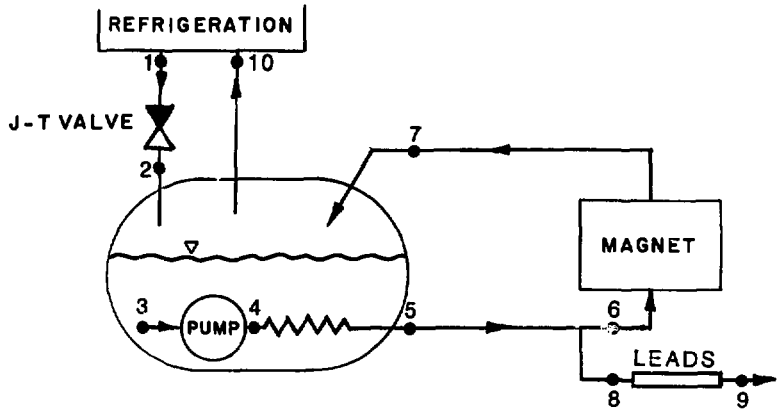

a) LIQUID HELIUM CIRCULATION WITH PUMP

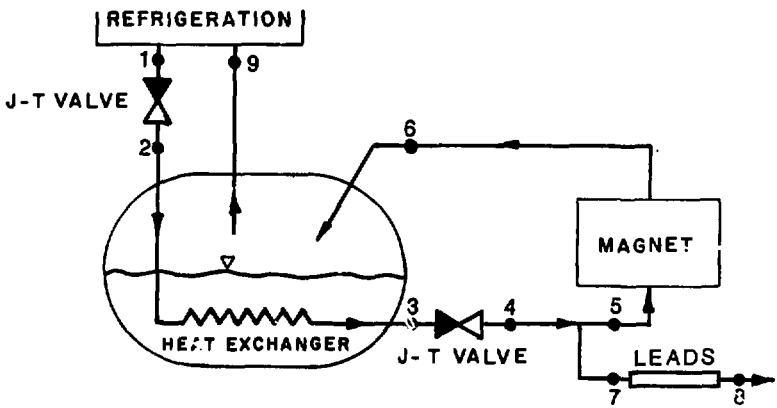

b) LIQUID HELIUM CIRCULATION WITH REFRIG. COMPRESSOR

XBL 773-7856A

Fig. 6. The two basic two-phase flow systems with the control dewar (see Tables 4-6).

helium, and therefore extra refrigeration must be supplied to overcome the work that goes into pumping. 2) The simple pump loop system shown in Fig. 6a cannot be used to cool the magnet down from room temperature; one must connect the magnet cooling system directly to a refrigerator and/or to the conditioner system (see Section 4).

The refrigerator compressor can be used as a circulator, provided a heat exchanger is used in an accumulator (the control dewar). The function of this heat exchanger is to reduce the inlet quality to the magnet cooling tube. The quality change across the magnet remains the same for a given mass flow in the circuit. The circuit shown in Fig. 6b has two Joule Thompson valves (J-T valves) which expand the gas in two stages. The first J-T valve expands the gas to a pressure of about 3 bar. The gas is heated while it is being expanded from 15-18 bar to 3 bar. The heat is transferred to the boiling liquid helium in the accumulator tank as the gas flows through the heat exchanger. Expansion of the gas from 3 bar to the final inlet pressure of the load will result in an inlet quality at the load which approaches zero. If there were no heat exchanger, the inlet quality at the load would be around 0.4; the pressure drop in the tubular cooling system would be a factor of 2 to 3 higher.

The system shown in Fig. 6b is analyzed from a thermodynamic standpoint later in this section. This system is capable of being operated at 30 to 40 percent over the capacity of the refrigerator for short periods of time. (The amount of time is dependent on the amount of excess liquid helium in the accumulator). It can be cooled down by

the refrigerator directly, provided one bypasses the gas back to the compressors after it has passed through the load being cooled. The cool-down and warm-up modes are discussed later in this section.

The control dewar contains both a helium pump and a heat exchanger system. During cool-down and normal operation, the refrigerator compressor system will circulate helium through the TPC magnet. The helium pump is a back-up circulator which can be used to keep the magnet cold in the event of refrigeration failure. The design of the control dewar and the helium pump are discussed in the next two subsections. The thermodynamics of normal operation is discussed in subsection c. The pressure drop in the magnet cooling system during cool-down and normal two-phase operation is estimated in subsection d.

a. The Control Dewar

The heart of the cooling system, the control dewar is a wide-mouth cryostat with evacuated multilayer insulation and forced-cooled liquid nitrogen shields. It contains the helium pump described in subsection b, the heat exchangers described in subsection c, and the control valves.

The inner vessel of the control dewar has a 508 mm OD (20 inches) with 1.75 mm thick 304 stainless steel walls that are 1076 mm high (42.375 inches). The dewar has a rounded bottom. The top of the dewar is connected to a thick stainless steel plate that connects to a 305 mm OD (12 inches) 304 stainless steel neck 0.75 mm thick and 305 mm (12 inches) high. The inner vessel was pressure-tested to a pressure of 175 psi, and is connected to the liquid nitrogen shield about 5 inches from the top of the neck.

The liquid nitrogen shield is a copper sheet that is cooled by the forced flow of liquid nitrogen in tubes. The outer vacuum vessel is made of 304 stainless steel. The vacuum system is designed as a sealed-off system without continuous pumping on the vessel. Packets of molecular sieve are attached to the cryogenic vessel to pump small helium leaks. There are 20 layers of aluminized Mylar insulation inside the nitrogen shield and 30 layers outside the shield. Figure 7 shows a diagram of the control dewar, its inner vessel, nitrogen shields, and outer vessel.

The control dewar's two heat exchangers remove heat from the helium that has been pumped in or expanded through a J-T valve. The heat exchangers insure that the helium will enter the magnet at the lowest possible quality. Figure 7 shows the control dewar and the helium pump assembly in a cross-section schematic.

The plug assembly which fills the neck of the control dewar has a number of parts in it. Four of these parts contain the female part of a bayonet valve assembly. These parts include: 1) a two-way valve for helium entering the control dewar from the refrigerator; 2) a full-flow valve for helium returning to the refrigerator; 3) a throttling valve for helium being delivered to the TPC magnet system; 4) a throttling valve for helium returning from the TPC magnet system; 5) a vent and fill line which is attached to a relief valve, a rupture disc and a helium fill port with ball valve; 6) various instrumentation ports; and 7) the helium pump drive shaft port. The schematic view of the top plate showing the location of various parts is shown in Fig. 8.

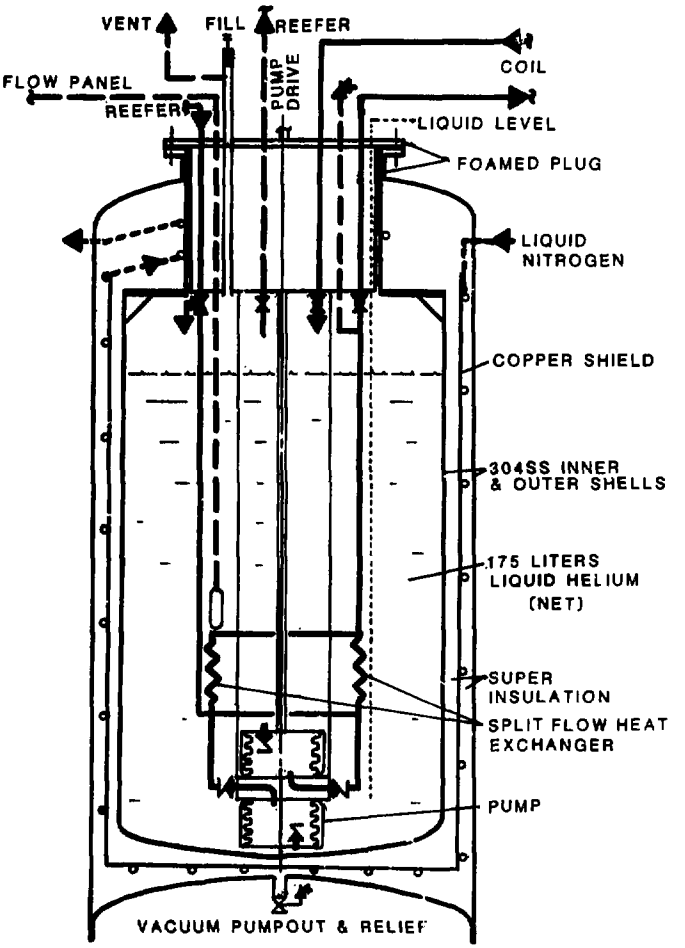

XBL 802-8402

Fig. 7. A cross-section schematic of the control dewar showing the location of major components.

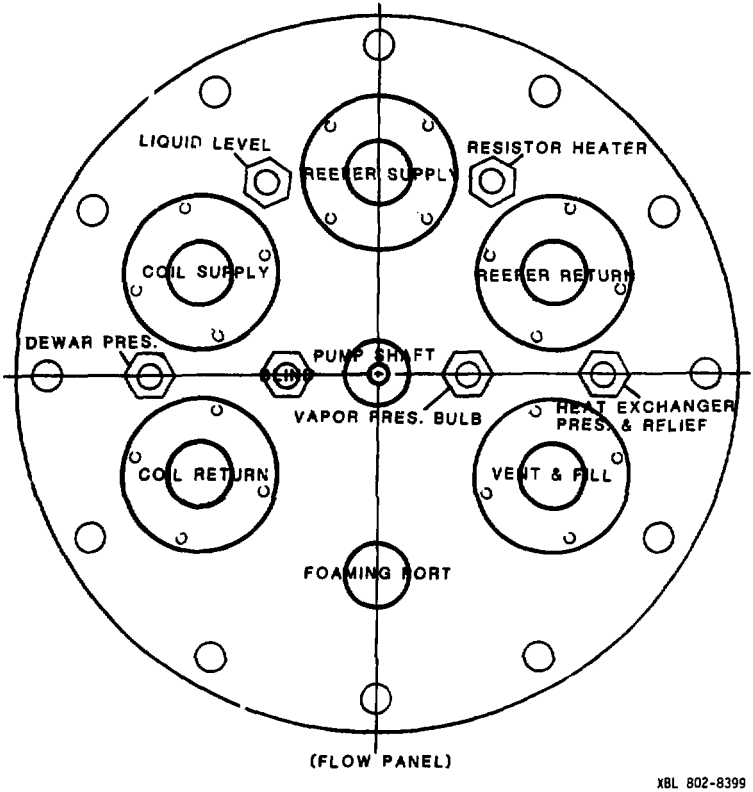

Fig. 8. The control dewar top plate schematic.

The transfer lines from the refrigerator and the TPC magnet system are flexible. These lines feed into the control dewar through a 90° bend bayonet connector. This connector serves as the male part of the various valves. Figures 9 and 10 show cross-sectional views of the mating of these valve parts. The control dewar, with its plug and four bayonet valves, is expected to have a most probable heat leak of 5 W (the minimum is 3 W; the maximum is 7 W without LN_2 in the shields). Recent measurements of the control dewar heat leak (which includes any thermal acoustic oscillations present in the pressure tap capillary tubes) show that the heat leak varies from 1.5 to 6 W, depending on the liquid level.

The control dewar was pumped down with a cryoadsorption pump for the first time to a vacuum of 2×10^{-6} Torr with the nitrogen-cooled molecular sieve pump alone. This showed us that the helium, neon, and hydrogen present in the dewar initially was swept out with the air. The dewar was backfilled with dry nitrogen when the vacuum was let up to air. Preliminary tests with liquid helium showed very low boil-offs when a blank plug was installed. Most of the heat leak measured during our tests of the dewar with everything connected was due to the bayonets and ports in the plug.

b. The Liquid Helium Pump[18]

The liquid helium pump for the cooling system utilizes two bellows, each consisting of 30 hydroformed 347 S.S. convolutions, which are caused to compress and expand by a reciprocating mechanism driven by a variable-speed, torque-controlled dc gearmotor, as illustrated in Fig. 11.

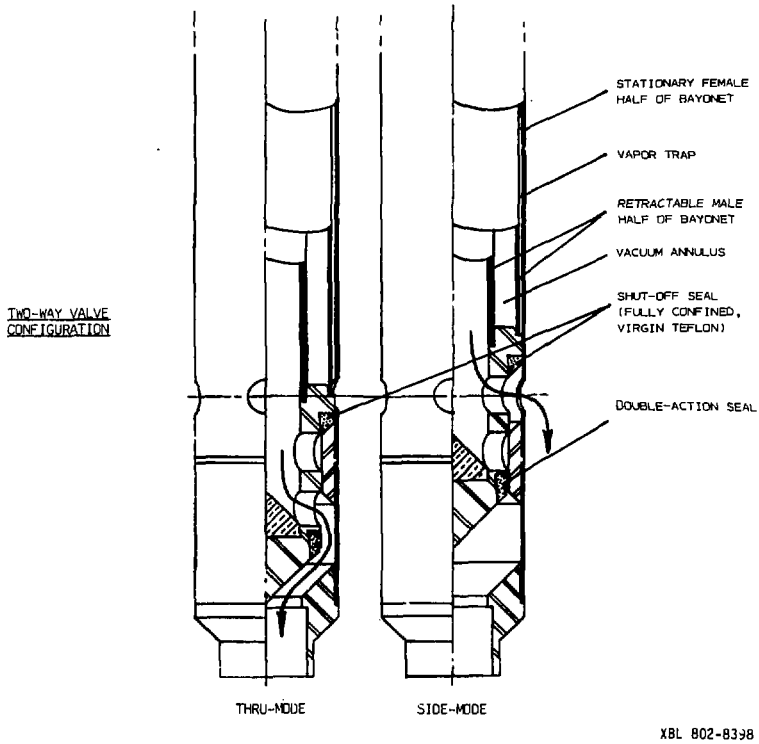

Fig. 9. Cross-section views of the two-way valve at the mating surfaces.

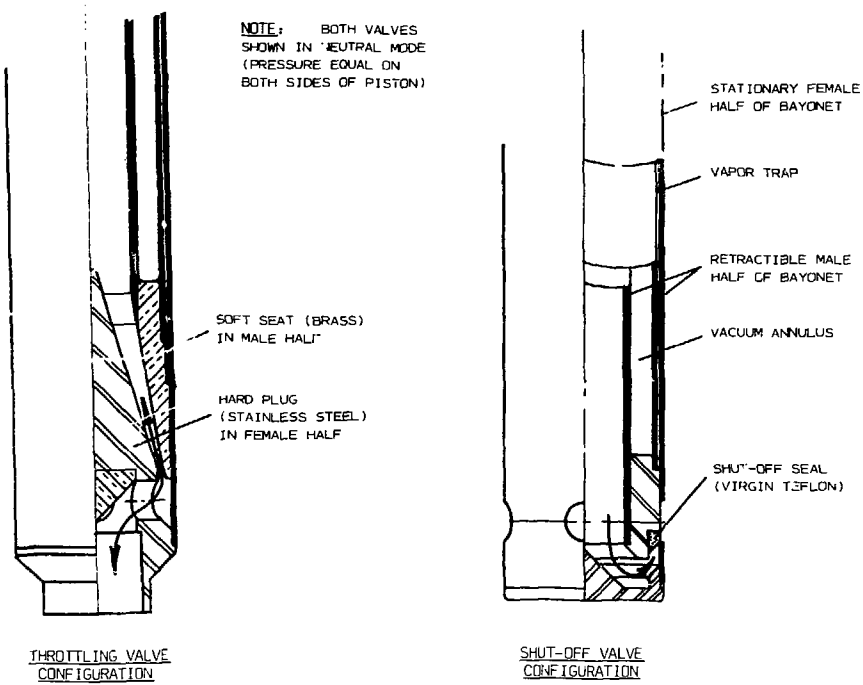

XBL 802-8397

Fig. 10. A cross-section view of the shut-off and throttling valves at the mating surfaces.

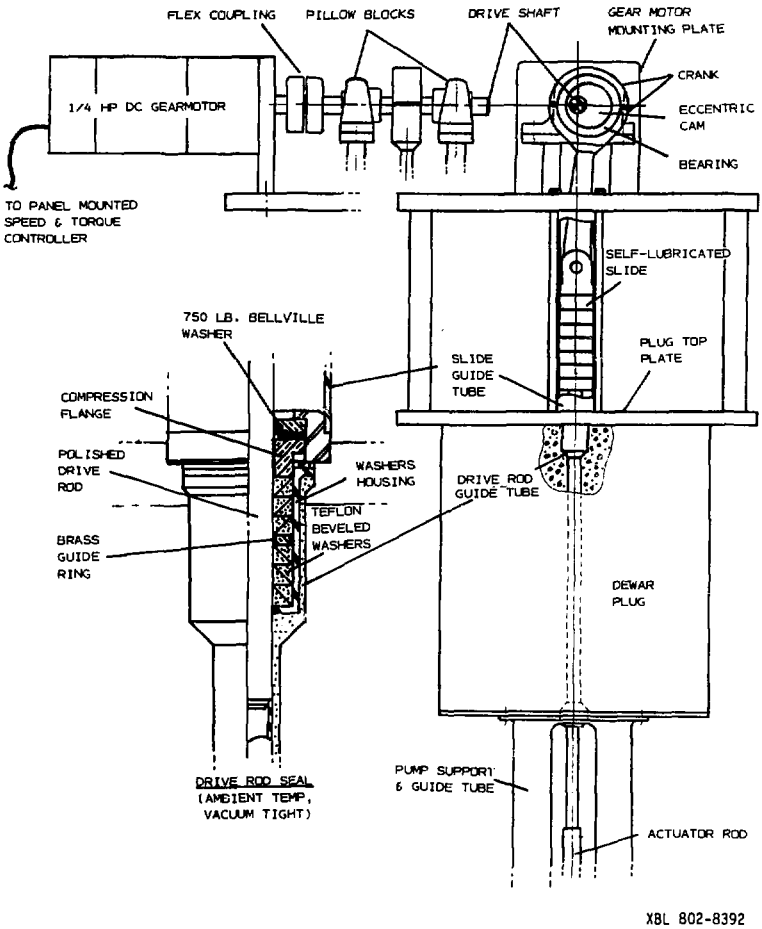

Fig. 11. The helium pump system from the drive motor to the pump bellows.

Figure 12 is a cross section of the pump chambers with its components identified. The ported block is rigidly attached to the support and guide tube, which is stationary (shown in black). All other parts move with the actuator rod and shroud as they reciprocate.

The suction poppet valves are positioned by inertial and dynamic fluid forces; the configuration as shown is for a down-stroke mode. The arrows indicate the direction of fluid flow as it enters the lower cavity and is expelled from the upper. This double-acting bellows action results in a more constant flow than the intermittent flow that a single bellows would produce. In an up-stroke mode, the lower poppet is seated and the upper poppet is unseated, reversing the fluid flow as shown. Flow into the pump cavities is distributed equally by sixty 1/16-inch diameter holes oriented in a circle in the suction valve retainers.

Both discharge ports are fitted with lift plug check valves which prevent back flow into the pump cavities from the split flow heat exchanger, which shares a common liquid helium bath with the pump. This bath provides the suction liquid head for the pump. The pump stroke can be fixed at 1/2, 3/4, or 1 inch depending on which eccentric cam is selected.

The anticipated liquid helium flow required for the TPC magnet system is 12-15 grams per second. Using the 1-inch cam, this flow is attainable over a differential pressure range of 0 to 1 atm; the speed range for this flow rate and differential is 20-25 strokes/min (RPM of the gearmotor) at measured volumetric efficiencies of 70-90 percent.

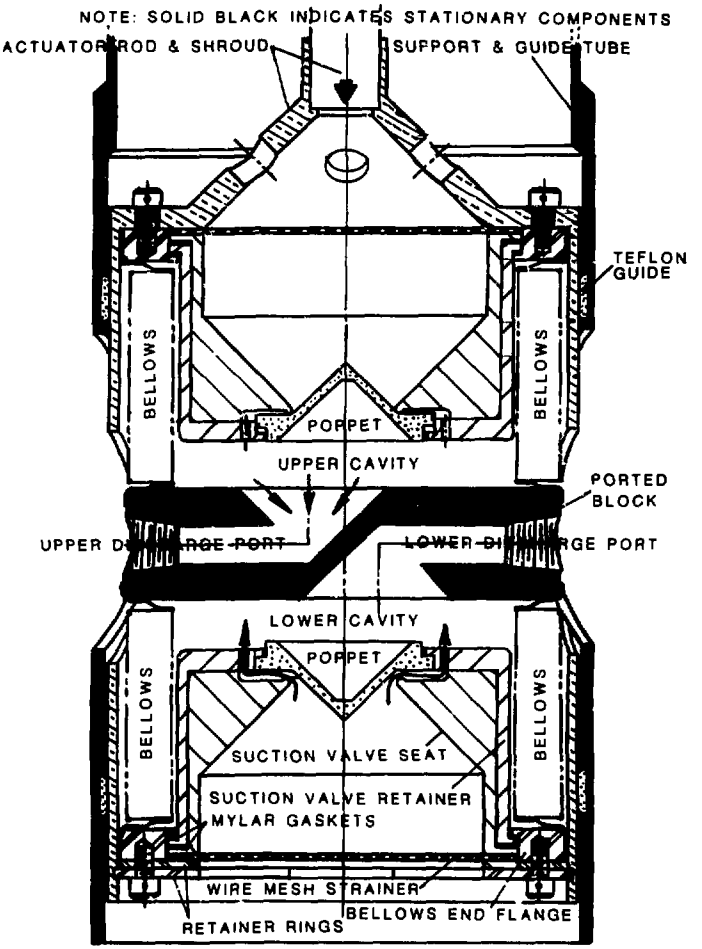

Fig. 12. A cross section of the helium pump showing the double-acting bellows system and valves.

The adiabatic efficiency expected is about 40 percent. Using an adiabatic efficiency η ($\eta = 0.4$) one can calculate the estimated pump work Q_p

$$Q_p = \dot{m}\Delta H \approx \frac{\dot{m}V\Delta P}{\eta} \tag{5}$$

where $\dot{m}$ is the mass flow through the pump; ΔH is the enthalpy charge across the pump; V is the specific volume of the fluid entering the pump; and ΔP is the pressure change across the pump; η and Q_p have been defined. In rough terms, the pump work Q_p can be estimated using the following equation

$$Q_p \approx 2.1\ \dot{m}\Delta P \tag{5a}$$

where the mass flow m is given in grams per second and the pressure rise ΔP across the pump is given in atmospheres. Figure 13 shows the operating volumetric efficiency and mass flow as a function of pump speed for various pressure rises across the pump. Figure 14 is a photograph of the helium pump and its heat exchanger system, which is inserted in the control dewar. Figure 15 shows the control dewar with the pump and transfer lines installed.

c. Thermodynamics of the Control Dewar and Magnet Cooling System

This section analyzes the thermodynamics of the TPC magnet refrigeration cycle. A comparison is made between operation on the helium pump (Fig. 6a), operation with the refrigerator and the control dewar (Fig. 6b), and operation using the refrigerator with no control

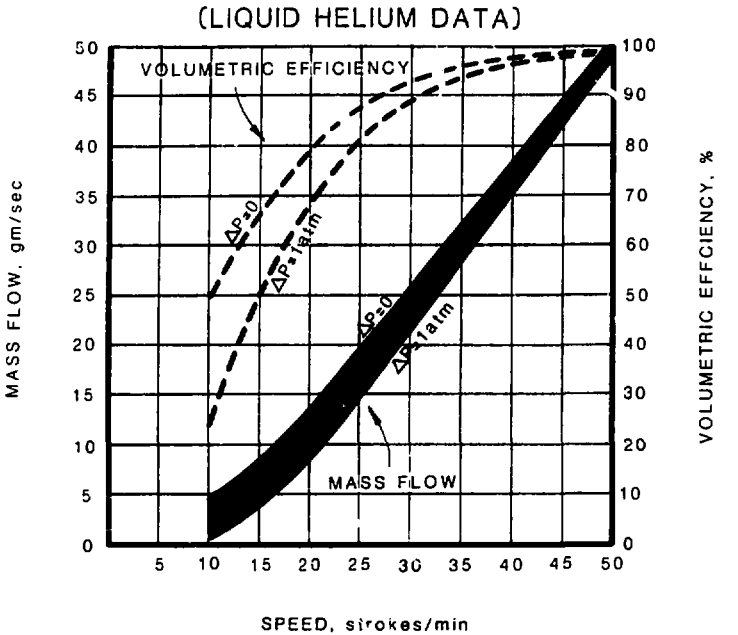

ONE INCH FIXED STROKE,
DUAL CHAMBER RECIPROCATING BELLOWS,
POSITIVE DISPLACEMENT,
CRYOGEN CIRCULATING PUMP

XBL 803-8751

Fig. 13. Helium pump volumetric efficiency and pump mass flow as a function of pump motor RPMS for the one-inch cam.

CBB 789-12540

Fig. 14. The helium pump and its heat exchanger.

CBB 797-7708

Fig. 15. The TPC magnet control dewar with transfer lines installed.

dewar. The following conditions are assumed: 1) helium in the dewar is in two phases at a pressure of 1.2 atm (the temperature is 4.42 K); 2) the pressure drop across the magnet coil, including garden hose pressure drop (explained in subsection d) and normal two-phase flow pressure drop, is 0.4 atm (this assumed pressure drop is almost twice the value calculated in subsection d); 3) the helium mass flow from the helium pump is 12.4 gs^{-1} and the mass flow from the refrigerator J-T circuit is 15.4 gs^{-1} (the net mass flow through the magnet coil circuit is 12 gs^{-1}); 4) the refrigerator pressure and temperature at the J-T valve and of the J-T heat exchanger is 16.0 atm and 5.2 K, respectively; 5) the intermediate pressure between the two J-T valves is 3 atm[19] (see Fig. 6b).

The refrigeration thermodynamic calculations are done using NBS 631 helium properties[20] to calculate the fluid properties. We calculate or assume temperature T, pressure P, enthalpy H, entropy S, specific volume V and helium quality X. A quality of 0 is the saturated liquid line; a quality of 1 is on the saturated vapor line. The two-phase region is characterized by a value of X between 0 and 1.

Expansion through J-T valves is assumed to be isenthalpic. Heat exchangers are assumed to be isobaric. The magnet coil or load (see Fig. 6) is assumed to carry all of the 0.4 atm pressure drop. The leads shown in Fig. 6 have an assumed pressure drop of 0.4 bar while they add 573 W of heat to 0.4 gs^{-1} mass flow of helium so that the assumed helium exit temperature is 275 K. The calculatons are simpler if the lead gas is assumed to be taken off before the load. (This makes little difference to the thermodynamic statepoints).

The heat exchangers shown in Fig. 6a and 6b have an outside tube area of 1.97 m^2. The heat transfer (at a mass flow from 12 to 15 gs^{-1}) inside the tube is controlled by heat transfer at the outside surface. The heat transfer across the heat exchanger is characterized by:

$$Q_E = UA\overline{\Delta T} = \dot{m}\Delta H_E \tag{6}$$

where Q_E is the rate of heat transfer; $\dot{m}$ is the mass flow of the fluid; ΔH_E is the enthalpy change across the heat exchanger; U is the heat transfer coefficient; and A is the heat exchanger area. The log mean temperature difference $\overline{\Delta T}$ is

$$\overline{\Delta T} = \frac{\overline{\Delta T}_a - \Delta T_b}{\ln\left|\frac{\Delta T_a}{\Delta T_b}\right|} \tag{6a}$$

where ΔT_a is the temperature difference between the hot-end fluid and the bath, and ΔT_b is the temperature difference between the cold-end fluid and the bath (in our case, the bath temperature is assumed to be 4.42 K). U is difficult to calculate exactly since it is a function of ΔT_a and ΔT_b. For the heat exchanger in Fig. 6a, $U \approx 50\ Wm^{-2}K^{-1}$. For the heat exchanger in Fig. 6b we use $U = 210\ Wm^{-2}K^{-1}$. These values are ballpark figures; we don't expect large error will result from using them. A photo of the helium pump and heat exchanger assembly is shown in Fig. 14.

The enthalpy change across the magnet depends on the value of heat leak into the system due to transfer lines, compensation solenoids, and the main TPC solenoid. Heat leaks into the control dewar and transfer lines from the refrigerator don't count in the thermodynamics outlined here. The enthalpy change in the fluid stream flowing through the magnet box shown in Fig. 6 is given by

$$\Delta H_T = \frac{Q_T}{\dot{m}} \tag{7}$$

where ΔH_T is the enthalpy change due to heat transferred to the magnet components; Q_T is the heat transferred to the magnet component; and $\dot{m}$ is the helium mass flow through the cooling system (in our case, the mass-flow is from 12 to 15 gs^{-1}). A lead flow of 0.4 gs^{-1} has been taken away before helium flows through the magnet. Two values of Q_T are used in the calculations:

Q_T = 40.9 W when liquid nitrogen is flowing in the shields

Q_T = 121.8 W when no nitrogen is flowing in the shields

Tables 4, 5, and 6 present the statepoint calculations for these different helium-flow systems. Table 4 applies when the helium pump is used (see Fig. 6a); Table 5, when the refrigerator compressor circulates the helium and there is a control dewar (see Fig. 6b); and Table 6, when helium is fed directly from the refrigerator to the load. Statepoints 2 and 3--the second J-T valve and the control dewar--are left out of Fig. 6b. The statepoints used in this case correspond to those in Fig. 6b. Both values of Q_T are considered.

Table 4. Thermodynamic statepoints for operation of the TPC magnet system with the helium pump and the control dewar (see Fig. 6a).[a]

State-point	m (gs^{-1})	T (K)	P (atm)	H (Jg^{-1})	S ($Jg^{-1}K^{-1}$)	V ($m^3\ kg^{-1}$)	X
1	15.4	5.20	16.0	19.74	3.277	6.57×10^{-3}	---
2	15.4	4.42	1.2	19.74	5.484	19.57×10^{-3}	0.418
3[b]	12.4	4.42	1.2	10.80	3.667	8.28×10^{-3}	0.000
4[c]	12.4	4.56	1.6	11.63	3.775	8.38×10^{-3}	---
5	12.4	4.46	1.6	11.02	3.640	8.16×10^{-3}	---
6	12.0	4.46	1.6	11.02	3.640	8.16×10^{-3}	---
7[d]	12.0	4.42	1.2	14.43	4.487	15.94×10^{-3}	0.190
7*[e]	12.0	4.42	1.2	21.17	6.011	30.71×10^{-3}	0.542
8[f]	0.4	4.46	1.6	11.02	3.640	8.16×10^{-3}	---
9	0.4	275	1.1	1443.	30.58	4.701	---
10[d]	15.0	4.42	1.2	22.43	6.295	32.84×10^{-3}	0.608
10*[e]	15.0	4.42	1.2	27.82	7.513	44.22×10^{-3}	0.889

[a]The helium enters the refrigerator as a two-phase mixture. The liquid level in the control dewar is at the refrigerator return pipe.

[b]The helium pump work between statepoints 3 and 4 is estimated to be 10.3 W.

[c]The heat exchanger between statepoints 4 and 5 has these properties: $U = 50\ Wm^{-2}K^{-1}$, $A = 1.97m^2$, $\Delta T = 0.08$ K and $Q_E = 7.56$ W.

[d]Statepoints 7 and 10 assume a load of 40.9 W between statepoints 6 and 7.

[e]Statepoints 7* and 10* assume a load of 121.8 W between statepoints 6 and 7*.

[f]The gas going from statepoints 8 to 9 intercepts about 570 W.

Table 5. Thermodynamic statepoints for operation of the TPC magnet system with helium circulated by compressors. A control dewar and heat exchanger are used (see Fig. 6b).[a]

State-point	m (gs^{-1})	T (K)	P (atm)	H (Jg^{-1})	S ($Jg^{-1}K^{-1}$)	V ($m^3\ kg^{-1}$)	X
1	15.4	5.20	16.0	19.74	3.277	6.57×10^{-3}	---
2[b]	15.4	5.49	3.0	19.74	5.110	11.23×10^{-3}	---
3	15.4	4.46	3.0	11.25	3.441	7.65×10^{-3}	---
4	15.0	4.51	1.6	11.25	3.694	8.23×10^{-3}	---
5	15.0	4.51	1.6	11.25	3.694	8.23×10^{-3}	---
6[c]	15.0	4.42	1.2	13.98	4.385	14.99×10^{-3}	0.166
6*[d]	15.0	4.42	1.2	19.37	5.604	26.38×10^{-3}	0.448
7[e]	0.4	4.51	1.6	11.25	3.694	8.23×10^{-3}	---
8	0.4	275	1.2	1443.	30.58	4.701	---
9[c]	15.0	4.42	1.2	22.69	6.355	33.34×10^{-3}	0.621
9*[d]	15.0	4.42	1.2	28.09	7.574	44.79×10^{-3}	0.903

[a]Helium enters the refrigerator as a two-phase mixture. The liquid level in the control dewar is at the refrigerator return pipe.

[b]The heat exchanger between statepoints 2 and 3 has the following properties: $U = 210\ Wm^{-2}K^{-1}$, $A = 1.97\ m^2$ $\Delta T = 0.31$ K and $Q_E = 130.8$ W.

[c]Statepoints 6 and 9 assume a load of 40.9 W between statepoints 5 and 6.

[d]Statepoints 6* and 9* assume a load of 121.8 W between statepoints 5 and 6*.

[e]The gas going up the leads intercepts about 570 W between statepoints 7 and 8.

Table 6. Thermodynamic statepoints of operation of the TPC magnet system with helium circulated by the compressors. Control dewar has no heat exchanger (points 2 and 3 are left out of Fig. 6b)[a].

State-point	m (gs^{-1})	T (K)	P (atm)	H (Jg^{-1})	S ($JG^{-1}K^{-1}$)	V ($m^3\ kg^{-1}$)	X
1	15.4	5.20	16.0	19.74	3.277	6.57×10^{-3}	---
4	15.4	4.76	1.6	19.74	5.484	19.57×10^{-3}	0.418
5	15.0	4.76	1.6	19.74	5.484	19.57×10^{-3}	0.418
6[b]	15.0	4.42	1.2	22.47	6.304	32.92×10^{-3}	0.610
6*[c]	15.0	4.42	1.2	27.86	7.523	44.31×10^{-3}	0.891
7[d]	0.4	4.76	1.6	19.74	5.484	19.57×10^{-3}	0.418
8	0.4	275.	1.2	1443.	30.58	4.701	---
9[b]	15.0	4.42	1.2	22.47	6.304	32.92×10^{-3}	0.610
9*[c]	15.0	4.42	1.2	27.86	7.523	44.31×10^{-3}	0.891

[a]Helium enters the refrigerator as a two-phase mixture. The liquid level in the control dewar is at the refrigerator return pipe.

[b]Statepoints 6 and 9 assume a load of 40.9 W between statepoints 5 and 6.

[c]Statepoints 6* and 9* assume a load of 121.8 W between statepoints 5 and 6*.

[d]The gas going up the leads intercepts about 570 W between statepoints 7 and 8.

The value of Q_T only affects the last statepoint in liquid helium circuits (statepoints 4 and 10 in Fig. 6a and statepoints 5, 6, and 9 in Fig. 6b). When Q_T = 40.9 W statepoints without a star are used. When QT = 121.8 W the starred statepoints apply.

Table 4 shows the thermodynamics of helium pump operation at 12.4 gs^{-1} while the J-T circuit of the refrigerator operates at 15.4 gs^{-1}. Since pure liquid enters the pump, lower system mass flows can be tolerated, and the lowest net refrigeration is achieved. From Table 5, one can see that it takes slightly more refrigeration when the compressor is used as the circulator. The probable reason for this is the inefficiency of the heat exchanger and the fact that 15.4gs^{-1} is delivered to the load instead of 12.4 gs^{-1}.

A comparison of Tables 6 and 5 shows the importance of the control dewar. This comparison illustrates how the heat exchanger in the dewar shifts the operating point from the right-hand side of the two-phase dome (the vapor side) to the left-hand (liquid) side. The addition of the heat exchanger results in 1) lower pressure drops in the flow circuit (by a factor of two), 2) lower maximum temperature (about 0.1 K lower) and 3) more safety margin. One can operate the circuit shown in Fig. 6b when there is a load which is larger than the refrigeration available. As long as the heat exchanger in the control dewar is covered, one could refrigerate loads of up to 280 W when the flow circuit carries 15 gs^{-1}.

d. Pressure Drops in the Helium Cooling System

The original intent of the TPC magnet refrigeration system was to have a two-phase flow system that behaved like a single-phase flow

system. As a result, the mass flow per unit area was kept above 20 kgm^{-2} in order that the two-phase flow be kept in the bubble-and-froth region of the Baker Diagram.[21,22] Helium flow through the coil cooling tube and the transfer lines leading to the coil passes through tubes which have a cross-sectional area of $1.77 \times 10^{-4} m^2$. When the mass flow supplied by the refrigeration or pump is 12 gs^{-1}, the mass flow per unit area is 68 kgm^{-2}.

The pressure drops that are likely to be found in the TPC magnet cooling circuit are the frictional pressure drop and the so-called "garden hose" pressure drop. The frictional pressure drop is steady and is a function (to first order) of the mass flow squared over the density. For a two-phase flow system the relationship is more complicated than that, but it is a good first-order approximation for helium. The second type of drop is strictly a two-phase phenomenon that occurs in vertical loops with a horizontal axis--like the coils of a garden hose hung on a wall. This kind of pressure drop occurs when the liquid and gas phases separate in the cooling loop. The pressure drop represents the aggregate head of the liquid phase in the various loops.

The frictional pressure drop can be calculated using the following functional relationship:

$$\Delta P \approx \frac{0.8}{\pi^2}\lambda \frac{\dot{m}^2}{\pi}\left[1 + \frac{fL}{D}\right]\frac{1}{D^4} \tag{8}$$

where

$$f = 0.184\ Re^{-0.2} \tag{8a}$$

and

$$Re = \frac{4\dot{m}}{\pi D \mu} \tag{8b}$$

where $\dot{m}$ is the mass flow; ρ is the average density of the helium; L is the cooling circuit length; D is the effective tube diameter (in this case $D = (4Ac/\pi)^{1/2}$ where Ac is the flow cross-sectional area); μ is the viscosity of the helium, and λ is a two-phase flow factor ($\lambda = 1$ if the flow is single phase and $\lambda \approx 1$ when the exit density is used in the two-phase flow case). The pressure drop in the cooling circuit is ΔP, and f is the Fanning friction factor. (Note: Eq. (8) includes the momentum term as well as the friction term.)

Table 7 shows the frictional pressure drop in the TPC magnet cooling circuit as a function of average magnet temperature. It also shows the Reynolds number, viscosity, and friction factor. For the calculations in Table 7, $D = 1.505 \times 10^{-2}$ m, L = 497 m, and $\dot{m} = 1.2 \times 10^{-2}$ kgs^{-1}. The values of μ, λ, f and Re are temperature dependent. The lowest pressure in the system is 1.2 atm. The value of ρ is an average value which applies at a value which occurs at T and $P + \Delta P/2$. The value of pressure drop calculated for Table 7 was calculated iteratively.

Figure 16 shows the pressure drop in the TPC magnet circuit as a function of temperature for mass flows of 12 gs^{-1}, and 30 gs^{-1}. Garden hose pressure drop is not included. The range for two-phase

Table 7. Pressure drop in the TPC magnet cooling system as a function of temperature. The exit pressure is 1.2 atm, $m = 12\ gs^{-1}$, $L = 497$ m and $D = 1.505 \times 10^{-2}$ m (see Fig. 16).

T (K)	μ (Poise)	Reynolds number	Friction factor	Pressure drop[a] (atm)
300	1.99×10^{-4}	5.10×10^{4}	0.0211	14.1
200	1.51×10^{-4}	6.72×10^{4}	0.0199	11.0
100	9.78×10^{-5}	1.04×10^{5}	0.0183	7.13
70	7.83×10^{-5}	1.30×10^{5}	0.0175	5.66
50	6.36×10^{-5}	1.59×10^{5}	0.0168	4.54
20	3.59×10^{-5}	2.28×10^{5}	0.0149	2.34
10	2.28×10^{-5}	4.45×10^{5}	0.0136	1.35
5	1.43×10^{-5}	7.10×10^{5}	0.0124	0.74
Q[b]	Two-phase flow at T = 4.42 K			
40.9 W	3.06×10^{-5}	3.323×10^{5}	0.0144	0.17[c]
121.8 W	3.06×10^{-5}	3.32×10^{5}	0.0144	0.33[c]

[a] Two-phase pressure drop does not include the so-called "garden hose" pressure drop. One should add up to 0.2 atm of oscillatory pressure drop to the values given. This will include all of the garden hose pressure drop effects.

[b] The two heat leak ranges apply to nitrogen shields and no nitrogen shields. Viscosity is assumed to be the liquid phase. Density is assumed to be that of the exit quality of the fluid.

[c] When the mass flow through the magnets is increased from 12 gs^{-1} to 15 gs^{-1} the pressure drops for the two heat loads rises to 0.24 atm and 0.43 atm, respectively.

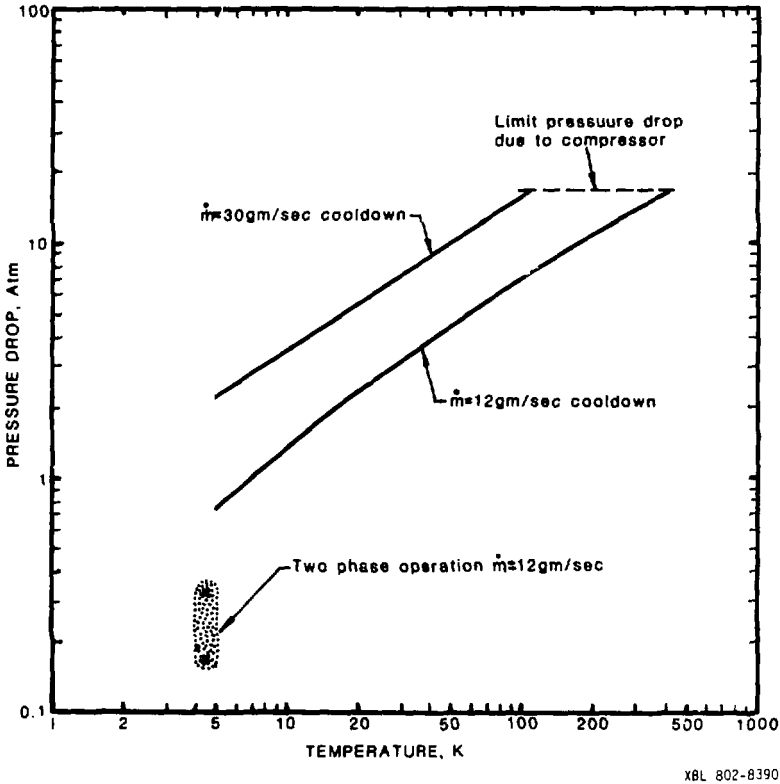

Fig. 16. TPC magnet flow circuit pressure drop as a function of magnet average temperature and helium mass flow.

flow is shown in the figure. From Fig. 16, it appears that the TPC magnet can be cooled at mass flows of at least 15 gs^{-1} in the temperature range from 300 to 100 K (provided temperature gradients in the magnet are not excessive). From 100 K on down the maximum mass flow is between 20 and 40 gs^{-1}. We should be able to use a substantial portion of the refrigeration available from the LBL 1500 W refrigerator during the first test at LBL. The TPC refrigerator at SLAC should be capable of delivering 15-20 gs^{-1} during cool-down. We should be able to use the additional capacity to shorten the cool-down.

Garden hose pressure drop is the big unknown. We have run an experiment from which broad guidelines can be drawn.[23] The equation for garden hose pressure drop given here is an approximation. Garden hose pressure drop ΔP_{GH} is:

$$\Delta P_{GH} \cong \frac{}{2} (\Delta\rho_{in} + \Delta\rho_{out}) [d_1 N_1 \cos\phi_1 + d_2 N_2 \cos\phi_2] g \qquad (9)$$

where is the garden hose pressure drop coefficient; $\Delta\rho_{in}$ is the density difference of the liquid and gas phase of the fluid entering the system; $\Delta\rho_{out}$ is the density difference of the liquid and gas phase of the fluid exiting the system; g is the acceleration of gravity ($g = 9.8\ ms^{-2}$); d_1 is the diameter of loop 1; N_1 is the number of turns in loop 1; ϕ_1 is the angle of the axis of garden hose loop 1 ($\phi_1 = 0$ when the axis is horizontal); d_2 is the diameter of loop 2; N_2 is the number of turns in loop 2; and ϕ_2 is the angle of the axis of garden hose loop 2.

For the TPC magnet the following values apply for $\Delta\rho_{in}$, $\Delta\rho_{out}$, d_1, d_2, N_1, N_2, ϕ_1, ϕ_2 and g:

$\Delta\rho_{in} = 82$ kg m^{-3}

$\Delta\rho_{out} = 100$ kg m^{-3}

$d_1 = 2.21$ m (main coil)

$d_2 = 0.35$ m (compensation coils)

$N_1 = 52$

$N_2 = 45$

$\left.\begin{array}{l}\phi_1 = 0\\ \phi_2 = 0\end{array}\right\}$ all coils horizontal axis

$g = 9.8$ ms^{-2}

The value of Ξ is difficult to determine. In most of our experimental data, $\Xi \approx 0.2$. When the exiting quality of the helium is low, Ξ should go down. The arrangement of the TPC magnet and the compensation solenoid in the circuit will influence Ξ. For example, the TPC main coil has 90 percent of the up and down motion in the loop. The compensation coils and their transfer line will have over half the heat load that boils helium in the tube. The quality of the helium exiting the TPC magnet is about 0.06. The fluid is leaving the TPC coil 27 percent gas by volume and 73 percent liquid by volume. During normal operation one can justify using

$$\Xi \approx 0.8X_{exit} \tag{9a}$$

when $X_{exit} \leq 0.25$ and

$$\Xi \approx 0.2 \tag{9b}$$

when $X_{exit} > 0.25$ where X_{exit} is the exit quality of the fluid leaving the TPC magnet cooling circuit (including the compensator). The exit quality is found at statepoint 5 in Table 4 and statepoint 6 in Tables 5 and 6.

Therefore, to first order, the estimated garden hose pressure drop will be

$$\Delta P_{GH} \approx 1.73 \times 10^4 \ Nm^{-2} = 0.17 \text{ atm} \tag{9c}$$

when the nitrogen shields operate (Q = 40.9 W) and m = 12 gs^{-1}.

$$\Delta P_{GH} \approx 2.27 \times 10^4 NM^{-2} = 0.22 \text{ atm} \tag{9d}$$

when there is no nitrogen in the shield (Q = 124.8 W) and m = 12 gs^{-1}. Increasing the mass flow to 18 gs^{-1} will reduce the garden hose pressure drop to 0.11 atm when nitrogen is in the shields. There is no change when no nitrogen is in the shields.

Experimental measurements of garden hose pressure drop in the C coil and the LBL TPC magnet tests will determine the operating mass flow. One wants to minimize the garden hose pressure drop and the pressure oscillation. (During our tests we observed a pressure

oscillation with a peak to valley amplitude equal to the total garden hose pressure drop. The period was around 30 seconds.) Garden hose pressure drop and oscillation will probably be present in the cooling system. The only sure way to eliminate the effect is to pressurize the circuit to a pressure above the critical point (2.22 atm). Unfortunately, the design operating temperature for the TPC magnet would increase from 4.7 K to around 5.2 K.

When the C coil was put between the two garden hose coils, the oscillations were damped out. The inlet coil did show a garden hose pressure drop; the exit coil did not. The refrigerator was unable to hold the load during the C coil test. The exit coil probably did not contain enough liquid for garden hose pressure drop to be seen. The C coil test didn't give us the answers required, except that the length, and hence the frictional pressure drop, does have an effect on garden hose oscillations.

4. THE CONDITIONER SYSTEM AND ITS ROLE IN COOLING THE TPC MAGNET

The conditioner system serves two functions. 1) The conditioner is a storage reservoir for liquid nitrogen. A nitrogen pump within the conditioner dewar circulates liquid nitrogen through the magnet cryostats and transfer lines. 2) The conditioner system plays an important role in the cooling down and warming up of the TPC magnet system. The conditioner dewar contains a heat exchanger that permits warm helium gas to be cooled down to 80 K in order to cool the TPC magnet system to 100 K quickly. The conditioner system also contains gas heaters that warm gas entering the TPC magnet (during a warm-up) and gas leaving the magnet (before its return to the compressor). Use of the system will reduce the TPC magnet system cool-down time about a factor of 2. Warm-up of the TPC magnet is also speeded up. Figure 17 is a schematic diagram of the conditioner system (excluding the pumped liquid nitrogen circuit, which is shown in Fig. 27).

a. The Conditioner Dewar

The heart of the conditioner system is a type R Minnesota Valley Engineering wide-mouthed liquid nitrogen dewar. The dewar is 44 inches high and 24.5 inches outside diameter. Its capacity is about 160 liters of liquid nitrogen, enough for 20 hours of normal TPC magnet system operation. The dewar is flanged so that an aluminum top plate can be put on it with an O-ring seal.

The top plate assembly consists of two parts, an outer ring and a central port. The central port has the liquid nitrogen pump attached to it. This pump assembly can be unbolted and removed from the dewar

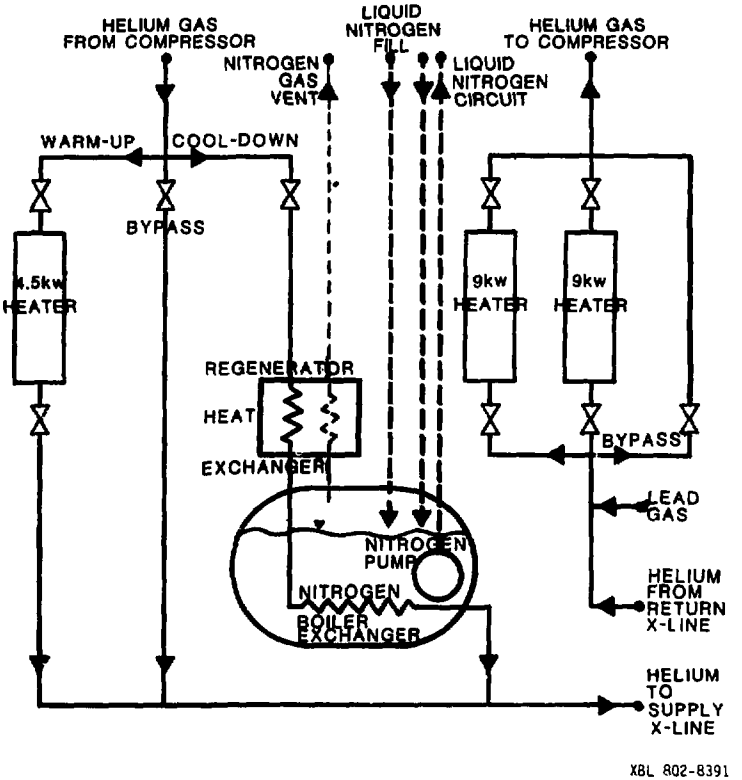

Fig. 17. The helium cooling cricuit using the conditioner. For use during magnet cool-down.

for easy repair. The outer ring plate has the gaseous helium to liquid nitrogen heat exchanger attached to it. This heat exchanger is an important part of the cool-down circuitry for the TPC magnet system. Figure 18 is a photograph of the conditioner dewar and the liquid nitrogen pump system.

b. The Conditioner Heat Exchangers

The conditioner system has three heat exchangers. The most important of these transfers heat from the helium to the liquid nitrogen boiler. The second heat exchanger acts as a regenerator which recovers the sensible refrigeration from the boiling nitrogen. This reduces liquid nitrogen consumption by a factor of two. A third heat exchanger has been installed between the warm helium gas entering the conditioner and the cold helium leaving the magnets that are being cooled down. This exchanger saves even more liquid nitrogen and raises the temperature of the gas entering the two 9.0 kW heaters.

The nitrogen boiler heat exchanger consists of two 25-foot-long, 1/2 inch OD tubes hooked in parallel and wound in a coil at the bottom of the conditioner dewar. The liquid nitrogen pump with its small heat exchanger sits down inside the coiled tubes. The boiler heat exchanger surface area is 0.53 m^2 on the inside surface of the tube and 0.61 m^2 on the outside surface of the tube. With helium gas flowing in the tube at the rate of 12 gs^{-1}, the U factor should be 1200-1400 $WK^{-1}m^{-2}$ when the outside of the tube is 1 K or more above the nitrogen bath temperature. The nitrogen bath pressure is about 1.5 atm (the bath temperature is about 78.5 K).[24] The

CBB 801-55

Fig. 18. The conditioner dewar and the liquid nitrogen pump.

estimated UA product for the heat exchanger is from 650 to 800 WK^{-1}. As a result, the pinch point temperature difference between the bath and the helium gas is expected to be less than 1.0 K. For the sake of this study, the exit temperature of the helium to be injected into the magnet during a cool-down is assumed to be 80 K.

The regenerator heat exchanger will be located on a frame behind the conditioner dewar. The heat exchanger is 20 feet long and consists of a 1/2-inch ID corrugated tube which has an unextended surface area of about 0.4 m^2. The corrugations in the tube serve to extend the surface. This is good because heat transfer in the regenerator is dominated by heat transfer on the nitrogen side. The estimated U factor for this heat exchanger is between 350 and 400 $Wm^{-2}K^{-1}$. The UA product used in the design of the heat exchanger is 150 WK^{-1}. As a result, the estimated pinch point temperature difference, which occurs at the high temperature end of the heat exchanger, is expected to be 9 K.

c. Heat and Mass Balance of Conditioner Circuit Delivering 80 K Helium

The conditioner circuit shown in Fig. 17 permits one to deliver helium gas to the magnets during the first phase of a system cool-down. This gas can be delivered at any temperature between 80 K and room temperature. One can simply throttle the two valves (one of the streams is cooled by liquid nitrogen and the other is at room temperature) in order to achieve the desired temperature. The TPC magnet system is designed to be cooled down by direct injection of

80 K helium gas into the system's transfer line after the gas leaves the control dewar. The cold helium is warmed up by the load being cooled down. This helium leaves the transfer line just before the control dewar. The helium leaving the load is warmed up to room temperature by the helium heat exchanger and the two 9.0 kW heaters so that the helium is returned to the compressor intake warm. The features of the conditioner system are described in the next subsection.

Table 8 and Fig. 19 compare the operation of the conditioner circuit with and without the regenerator heat exchanger. One can see from the statepoint in Table 8 that with the regenerator: 1) Liquid nitrogen consumption is reduced by over a factor of 2. 2) Nitrogen gas leaves the conditioner system near room temperature instead of at liquid nitrogen temperature. This eliminates ice-ball formation. Table 8 has these assumptions built into it: 1) The UA product of the regenerator heat exchanger is 150 WK^{-1}. 2) The UA product of the boiling nitrogen heat exchanger is 600 WK^{-1}. 3) The regenerator heat exchanger will reduce total liquid nitrogen consumption during the cool-down (including 40 $\ell\ hr^{-1}$ for the refrigerator and 7.7 $\ell\ hr^{-1}$ for the shields) from 3614 liters to 2079 liters (for a fast cool-down).

d. <u>The Gas Heaters</u>

The conditioner system includes three Chromalox heaters. One of the heaters (model number GCH-3405) is rated at 4.5 kW and two of the heaters (model number GCH-60905) are rated at 9.0 kW each. The 4.5 kW

Table 8. Thermodynamic statepoints for the operation of the conditioner circuit with and without a regenerator heat exchanger (see Fig. 19).

State-point	Fluid	m gs^{-1}	T (K)	P (atm)	H (Jg^{-1})	S ($Jg^{-1}K^{-1}$)	V (m^3kg^{-1})	X
Nitrogen boiler without regenerator (see Fig. 19a)								
1	He	12	300	12	1570	26.2	516×10^{-3}	---
2	He	12	80	12	436	19.4	139×10^{-3}	---
3	N_2 liq	68.1[a]	78.7	1.15	158.5	2.03	1.25×10^{-3}	0.00
4	N_2 gas	68.1[a]	78.7	1.15	358.3	4.99	194×10^{-3}	1.00
Nitrogen boiler with a regenerator (see Fig. 19b)								
1	He	12	300	12	1570	26.2	5.16×10^{-3}	---
2	He	12	184.6	12	975	23.7	318×10^{-3}	---
3	He	12	80	12	436	19.4	139×10^{-3}	---
4	N_2 liq	32.4[b]	78.7	1.15	159	2.03	1.25×10^{-3}	0.00
5	N_2 gas	32.4[b]	78.7	1.15	358	4.99	194×10^{-3}	1.00
6	N_2 gas	32.4[b]	291	1.05	571	6.30	716×10^{-3}	---

[a] 68.1 gs^{-1} = 306.5 $\ell\ hr^{-1}$

[b] 32.4 gs^{-1} = 145.8 $\ell\ hr^{-1}$

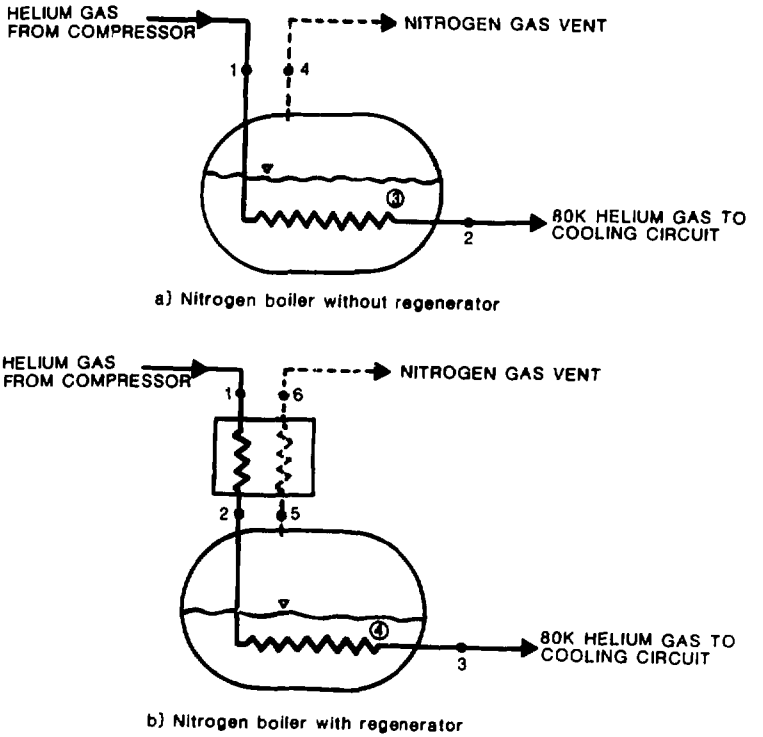

Fig. 19. Simplified conditioner flow circuits with and without the regenerator heat exchanger (see Table 8).

is used to warm helium gas entering the magnet during a warm-up. At a flow rate of 12 gs^{-1}, the gas can be warmed up to 70 K. The two 9.0 kW heaters, which are hooked in parallel, are used to warm up cold helium gas returning to the compressors from the magnet being cooled. These heaters can handle 12 gs^{-1} of gas which enters at temperatures as low as 4 K. Heating the helium gas returning from the magnets to the compressor eliminates ice-ball formation and insures that the 600 m of steel pipe between IR2 and the helium compressor is not cold-shocked.

e. Cool-Down and Warm-Up of the TPC Magnet System[16,17]

The cool-down procedure to be used on the TPC magnet has been described in a number of other publications but is worth repeating here.[16,18,20,23] The procedure has four major steps: 1) cool down the magnet from 300 K to about 80-100 K; 2) cool down the magnet from 80-100 K to around 10 K; 3) reach full and normal 4 K operation, and 4) warm up from 4 K to 300 K. These four processes are represented in simplified schematic form in part a, b, c, and d respectively in Fig. 20.

Cool-down from 300 K to 80 K requires the conditioner. The conditioner omits the full flow of helium from the compressors through the coil during the early phase of the cool-down. As a result, the cool-down from 300 to 80 K should take only 10 hours. Figure 20a shows a simplified flow circuit which omits the return flow heaters and the regenerator heat exchanger.

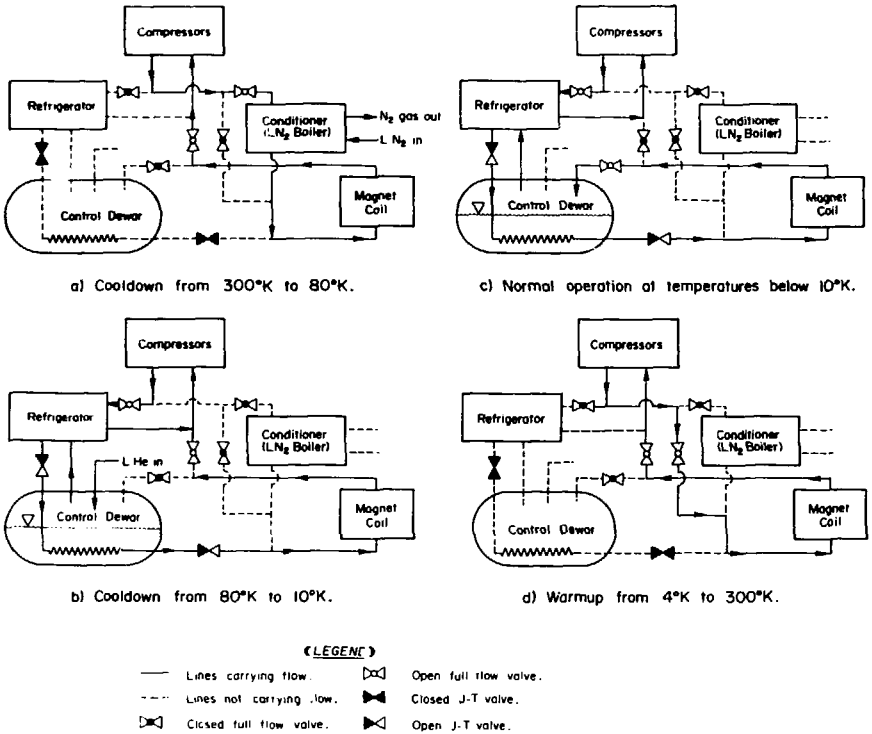

XBL 783-7635

Fig. 20. A simplified schematic diagram showing various stages of the cool-down and warm-up of the TPC magnet system.

The refrigerator can be started before the magnet cool-down starts. The refrigerator can be cooled down, and the control dewar and the 500-liter storage dewar filled with liquid helium. The TPC refrigerator should be capable of operating on compressor gas flows of 40-50 gs^{-1}. The expected liquefaction rate under those conditions might be 50 to 60 hr^{-1} in the 500-liter dewar and/or the control dewar. (This is with liquid nitrogen pre-cooling.) The point is, there is no reason to believe that the refrigerator and the conditioner circuit can't be run simultaneously. It should be possible to mix helium from the control dewar (either using the J-T valve or the pump) with 80 K helium from the conditioner. This might be a desirable mode of operation when the magnet temperature drops below 150 K.)

The refrigerator must be brought into play in order to cool the magnet from 80 K to 10 K. The refrigerator supplies cold gas which has been cooled by its expansion engines. The gas flows out of the refrigerator through the J-T valve into the control dewar. The gas then flows through the magnet string where it is heated to the temperature of the warmest part of the last magnet. The gas then by-passes the control dewar and refrigerator as in the previous case and returns to the compressor suction through a heater. When the average temperature in the magnet string reaches about 30 K, liquid helium can be added to the control dewar, shortening the cool-down time. It takes about 100 liters of liquid helium (note the sensible heat of the helium is used in the refrigerator) to cool the magnet string from 30 to 5 K (see Fig. 20b).

Once the magnet temperature reaches 10 K, the control dewar can be used as a carrier of cold return gas from the magnet. The refrigerator will fill the dewar with liquid, if it is put into the mode shown in Fig. 20c (note this is the same as Fig. 6b). One can continue to fill the dewar with liquid helium from an external tank until it is full. This will take about 250 to 300 liters (175 liters to fill the control dewar and 80 liters of flash-off to fill the magnet cooling tube with liquid; the rest is lost in the transfer process). Adding liquid to the control dewar to fill it cuts 9 or 10 hours off the cool-down time. Normal operation of the TPC magnets can proceed with either the helium pump (see Fig. 6a) or the refrigerator J-T circuit supplying mass flow (see Fig. 6b or Fig. 20c). Normal TPC magnet operation has been covered in a previous section.

The warm-up of the TPC magnet is very simple. Warm gas from the compressor outlet is injected into the cold coil (note the warm gas from the compressor can be mixed with cold gas from the conditioner in order to avoid thermal stresses). The gas from the coil goes back to the compressor through the heater (see Fig. 20d).

The cool-down time for the TPC magnet was estimated in Ref. 25. The estimate given there has changed very little. The estimated cold mass of the magnet system has increased from about 1700 kg to about 1900 kg. On the other hand, the design cool-down mass flow has been increased from 10 gs^{-1} to 12 gs^{-1}. The total heat transfer area (in the pipes) has been reduced from 60 m^2 to 20 m^2. The net change in cool-down time is small.

Table 9 shows the estimated cool-down time from 300 K until the control dewar is filled with liquid. Also shown in Table 9 is an estimate of the time needed to recover the TPC magnet from a quench. Two methods of cool-down are shown: one with a liquid helium assist from 30 K on down, the other without.

The third column of Table 9 estimates roughly the time needed to cool the TPC magnet using the LBL 1500 W refrigerator. (The first two columns assume a 200 W CTi model 2800 refrigerator.) The gas mass flows are as follows: 1) From 300 K to 40 K the gas mass flow through the magnet is the maximum which can be delivered to the load (14 gs^{-1} at 300 K to 50 gs^{-1} at 40 K). 2) From 40 K on down the gas mass flow is 50 gs^{-1}. No change in cold mass was assumed. Cool-down time is greatly reduced when the LBL 1500 W refrigerator is used to cool the TPC magnet (see Fig. 21).

Table 9. Estimated cool-down time and quench recovery time for the TPC magnet (see Fig. 20)

Internal temperature	Cool-down time (hr) SLAC CTi 2800 Machine with liquid added	SLAC CTi 2800 Machine no liquid added	LBL 1500 W Machine no liquid added[a]
A. Cool-down from 300 K			
300→200 K	3.2	3.2	2.8
200→100 K	5.2	5.2	3.1
100→80 K	1.2	1.2	0.8
80→50 K	1.7	1.7	0.8
50→30 K	0.8	0.8	0.4
30→4.5 K	0.6[b]	3.0	0.8
Filled with liquid	1.4[c]	9.2	1.0
TOTAL	14.1	24.3	9.7
B. Quench recovery at full current 100 K to fill with liquid	5.7	15.9	3.3
C. Recovery from 10 hr shut down 50 K to fill with liquid.	2.8	13.0	2.2

[a]The LBL 1500 W refrigerator is already cold.

[b]Requires about 80 liters of additional liquid helium.

[c]Requires 250 to 300 liters of additional liquid helium.

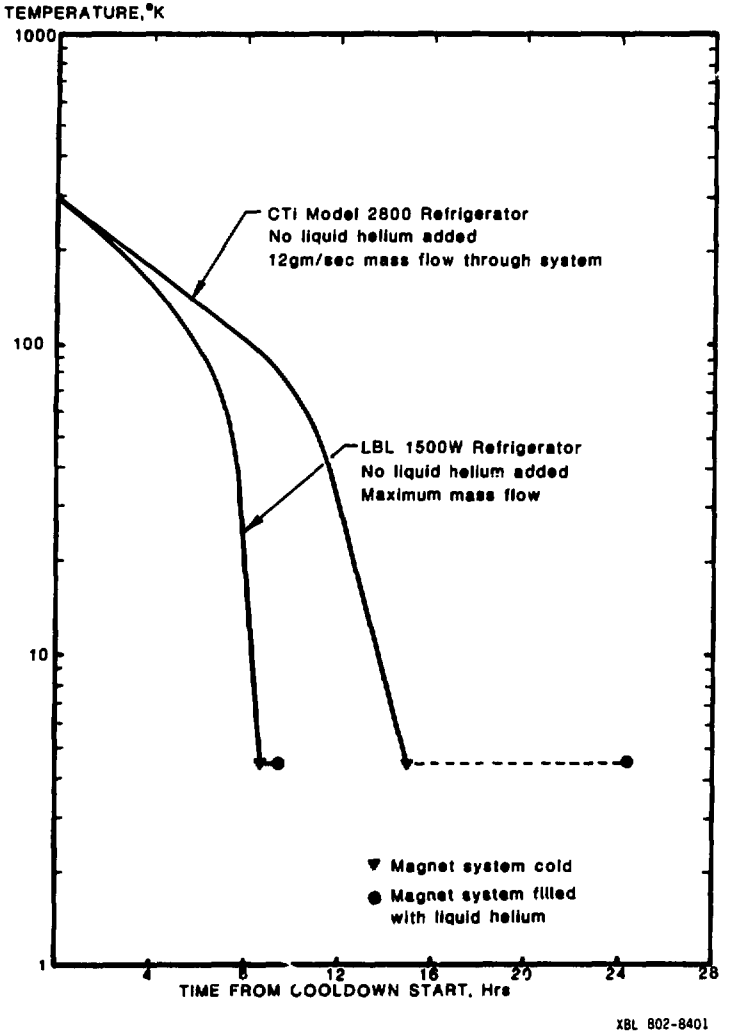

Fig. 21. Temperature vs. time from start of cool-down using the LBL 1500-W refrigerator and the SLAC CTi Model 2800 refrigerator.

5. GAS-COOLED ELECTRICAL LEADS AND CHARGING LOSSES

The electrical leads and charging losses will be the dominant loads on the refrigerator while the TPC magnet operates. The magnet has electrical leads of 3000 A (they will normally operate at 2225 A with a 1.5 T central field). Each compensation solenoid will have 600 A leads (which will normally operate at 546 A). The charging of the TPC magnet will produce a current in the bore tube and the ultra-pure aluminum circuit. This current heats the shorted secondary circuit and can drive the magnet normal if the capacity of the refrigeration system is exceeded.

a. Gas-Cooled Electrical Leads

The gas-cooled electrical leads for the TPC magnet and the compensation solenoids are a version of the standard LBL "tampax" leads which have been used for over 10 years. The prime requirements of the gas-cooled leads are: 1) reasonable efficiency, 2) capability of withstanding pressures of 70 to 100 atm without damage, 3) capability of operation for 20 minutes without gas flow, and 4) capability of operation in the horizontal position. The LBL "tampax type" leads meet all these criteria. The efficiency of the electrical leads is not optimum, but our recent experiments show that the leads can operate for at least 20 minutes without gas flow and satisfactorily in the horizontal position. The design of TPC "tampax" leads is shown in Fig. 22, and a photograph of the TPC magnet leads is shown in Fig. 23.

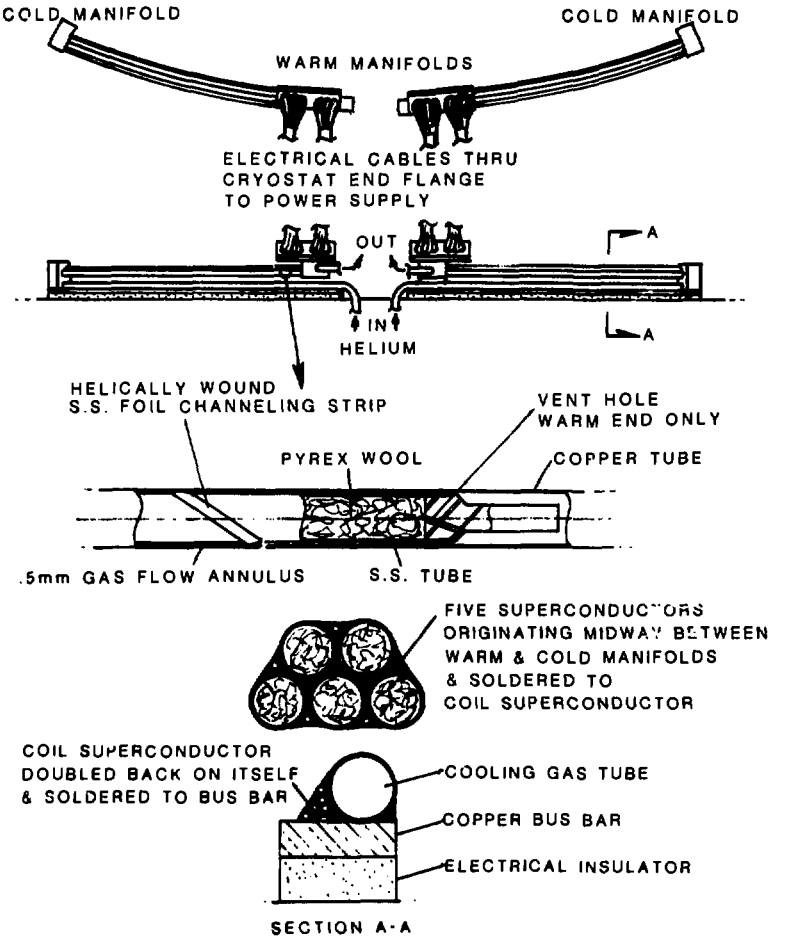

Fig. 22. Schematic diagram of the TPC magnet leads.

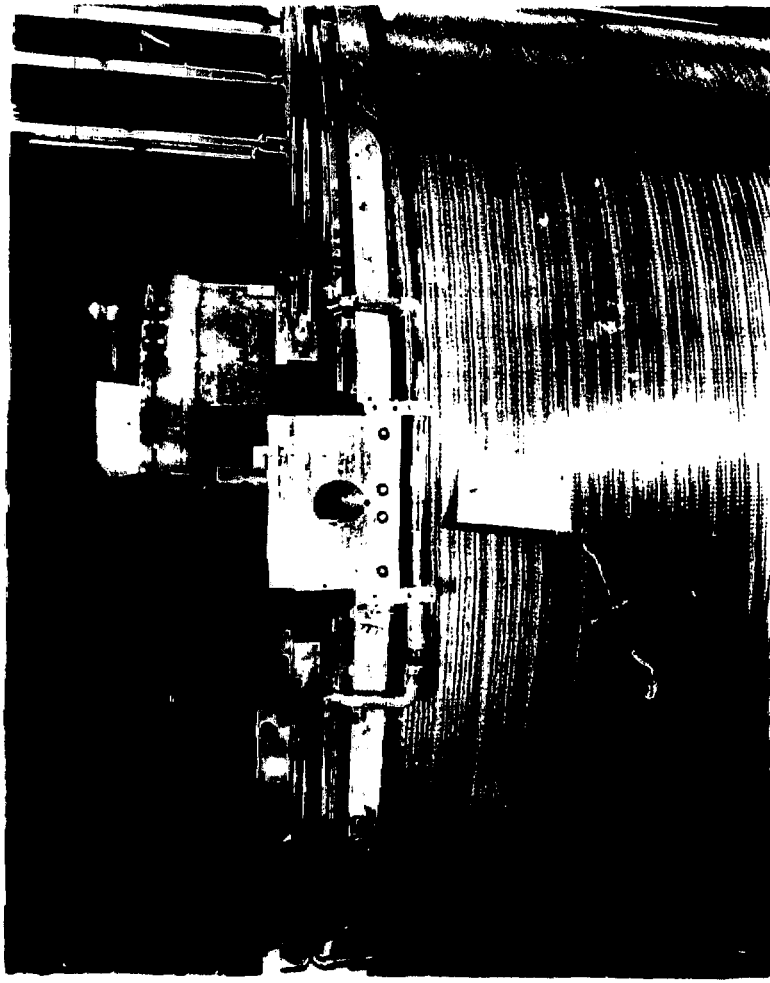

CBB 790-14610

Fig. 23. The main TPC magnet leads mounted on the TPC coil.

From measurements made by John Taylor and others, the mass flow needed to cool the magnet leads is estimated to be about 0.4 gs^{-1} per lead pair at 3000 A. At zero current, the gas flow needed is expected to drop to 0.2 to 0.25 gs^{-1}. At the design current for the TPC magnet, the gas flow is expected to be around 0.29 gs^{-1} for both leads.

The electrical leads for the TPC magnet compensation coils will be of the same design as the main coil leads. At full current in the compensation coil (around 600 A), the gas flow per lead pair will be about 0.08 gs^{-1}. At zero current, the lead gas flow per lead pair is reduced to about 0.05 gs^{-1}.

The normal operating current of 2225 A in the TPC main coil will require around 0.29 gs^{-1} of gas flow. The gas flow requirements to both compensators while they operate at their normal operating currents of 509 A will be a total of about 0.12 gs^{-1}. Thus, the total gas required for the TPC magnet system at 1.5 T central induction is around 0.41 gs^{-1} (all three sets of leads are running). The maximum gas flow could be as high as 0.63 gs^{-1}. The lead gas flow will not be a constant (the value given here is an average value) because the flow is to be controlled by a simple on-off controller (see Fig. 24) that varies the flow from a minimum value corresponding to the zero current condition to a maximum value corresponding to the flow needed to cool the leads at maximum current. (For the main TPC magnet leads this current is 3000 A, and for the compensators it is 600 A.)

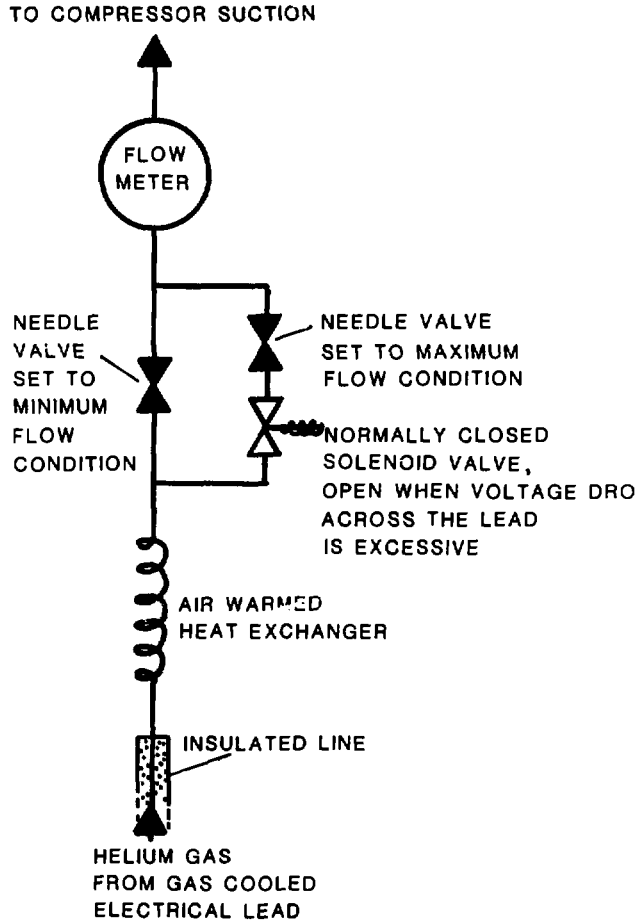

XBL 802-8393

Fig. 24. The on-off controller for gas-cooling electrical lead gas.

Lead gas flow is equivalent to liquefaction where the liquid helium is removed from the system as it is produced (this is not the same as accumulation into a dewar). Lead gas flow (liquefaction) can be translated into equivalent refrigeration using the following expression

$$\text{Refrigeration} = C_Q \times \text{liquefaction} \tag{10}$$

where refrigeration is in watts; liquefaction is in gs^{-1} and C_Q is the refrigeration to liquefaction coefficient in Jg^{-1}.

The refrigeration coefficient is dependent on the characteristics of the refrigerator and its operating setting. LBL has measured[16,26] values of C_Q which have been as low as 65 Jg^{-1} (in an old Arthur D. Little liquefier)[26] to as high as 125 Jg^{-1} (in a Cti 1400 set to maximum refrigeration rate).[16] A typical value of C_Q is between 80 and 110 Jg^{-1} (see Fig. 25). We don't know what C_Q is for a CTi Model 2800 under optimum operating conditions. (Measurements at Cti indicate it could be as low as 85 Jg^{-1}.)[27] If one uses an average C_Q of 90 Jg^{-1}, a minimum C_Q of 80 Jg^{-1} and a maximum C_Q of 110 Jg^{-1}, then one finds the following values of refrigeration from gas-cooled leads:

Minimum refrigeration = 32 W

Most probable refrigeration = 37 W

Maximum refrigeration = 69 W

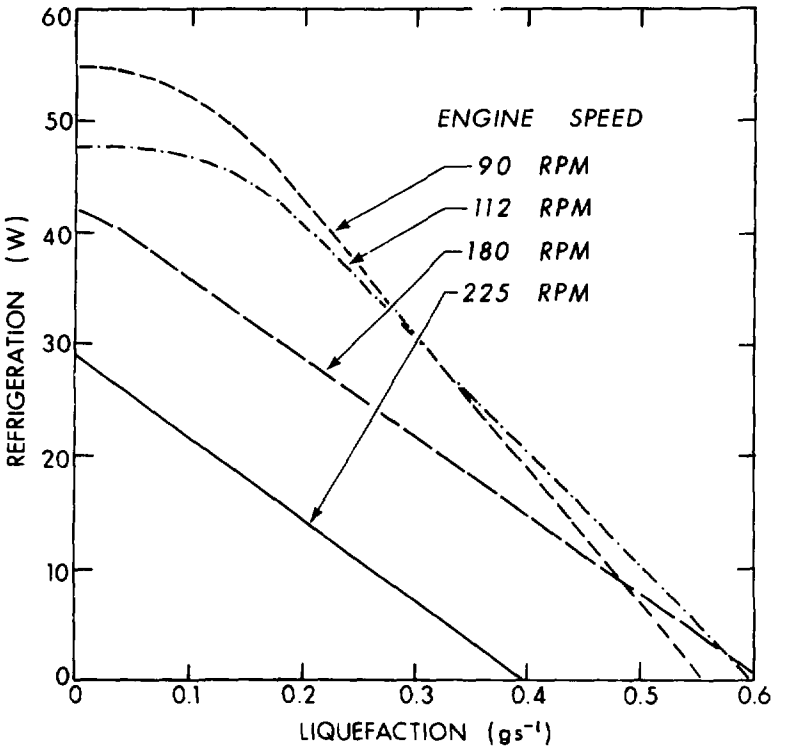

Fig. 25. Liquefaction vs. refrigeration for an LBL (Ti model 1400 refrigerator (measured values).

When one sizes the equipment for normal usage the most probable value applies. The point is that lead gas flow refrigeration is as large as all of the static heat loads (when there is liquid nitrogen in the shields). When one operates off the helium pump, the lead gas must be supplied by the pump. This is unlike the conventional bath cryostat, where lead gas is supplied by boiling helium from the cryostat, which does not represent an additional loss.

b) Heating While Charging the TPC Magnet

The TPC magnet and its compensators have shorted secondary circuits. These circuits will carry current any time these circuits see a $d\phi/dt$ voltage. The voltage seen on the shorted secondary circuits is:

$$V_2 = \frac{N_2}{N_1} V_1 \approx \frac{N_2}{N_1} L_1 \frac{di_1}{dt} \tag{11}$$

where V_2 is the secondary circuit voltage; V_1 is the primary circuit voltage; N_1 is the number of turns in the primary; and N_2 is the number of turns in the secondary circuit; i_1 is the primary circuit current; and L_1 is the primary circuit inductance.

In the TPC magne the bore tube has one turn, the ultrapure aluminum circuit has 600 turns, and the superconducting coil has 1772 turns. Thus, the voltage across the ultrapure aluminum circuit is 0.339 times the primary circuit voltage, and the voltage around the bore tube is 5.65×10^{-4} times the primary circuit voltage. The secondary i_2 current and the power generated in the secondary P_2 are:

$$i_2 = \frac{V_2}{R_2} \tag{12}$$

and

$$P_2 = I_2^2 R_2 = \frac{V_2^2}{R_2} \tag{13}$$

where R_2 is the resistance of the secondary circuit (no diodes or varistors are allowed). The ultrapure aluminum circuit has a maximum resistivity ratio RRR = 2500 ($\rho = 10^{-11}$ m) and the bore tube has a resistivity ratio RRR = 25 ($\rho = 10^{-9}$ m). The ultrapure aluminum circuit resistance is 5.84×10^{-3} ohm (at 4.5 K) and the bore tube resistance is 2.13×10^{-7} ohm (also at 4.5 K).

The ultrapure aluminum circuit can be operated with or without a diode string across it. (See Fig. 26 for a circuit diagram.) We have put three diodes in series across the circuit in each direction. The diodes carry 1 amp in the forward direction when the voltage across them is 1.8 V. (The diodes will carry thousands of amps when the voltage is increased to 2.5 volts.) Losses in the ultrapure aluminum will be small when diodes are used across the circuit and the charging voltage is below 5 V. This is not the case when there is no diode. Voltage ripple in the power supply does not appear to cause heating in the bore tube or ultrapure aluminum.[28]

Table 10 shows the charging losses in the TPC magnet when 5 volts (a fast charge) is put across the coil and when 1.5 volts (a slow charge) is put across the coil. The charging loss is shown with and

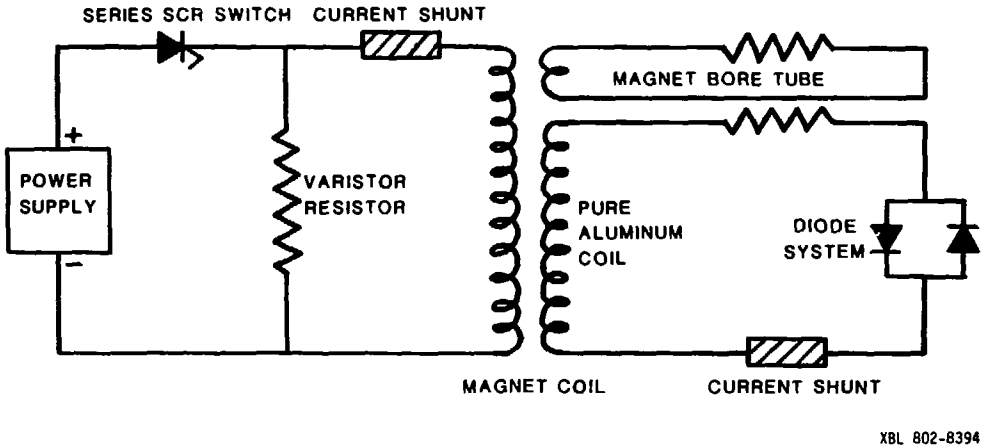

Fig. 26. Basic electrical circuit diagram for the TPC magnet and its shorted secondaries.

without diodes across the ultrapure aluminum circuit. From Table 10 it is clear that when the magnet is charged in 30 minutes, the charging losses are equal to or larger than the static heat leaks into the system. These losses will occur during both charge and discharge of the coil.

Table 10. Charging losses, charge times currents in the secondary circuits when the TPC magnet is charged from 0 to 1.5 (with iron).

	Fast charge (5 V)		Slow charge (1.5 V)	
	Diodes	No Diodes	Diodes	No Diodes
L_1 inductance (H)	4.48	4.48	4.48	4.48
di_1/dt (As^{-1})	1.114	1.114	0.334	0.334
Charge time (sec)[a]	2000	2000	6690	6690
Bore tube current (A)	132000	132000	3980	3980
Ultrapure aluminum current (A)	<1	291	<1	87
Charging losses (W)	37.3	529[b]	.4	47.3

[a]The charge time without iron would be 1800 sec for the fast charge and 6050 sec for the slow charge.

[b]The magnet would be driven normal if the heat load were generated.

6. SUMMATION OF LIQUID HELIUM AND LIQUID NITROGEN REQUIREMENTS FOR THE TPC SUPERCONDUCTING MAGNET SYSTEM

The first four sections of this report describe the components of the TPC cryogenic system. Minimum, maximum and most probable heat leaks are given for each component. An estimate of the amount of liquid helium refrigeration needed to operate the main and compensating superconducting coils is given. Heat leaks to liquid nitrogen are given. From the data in the various sections, one can estimate the total refrigeration required by the TPC magnet.

Liquid helium refrigeration at a temperature of 4.4 to 4.8 K will be supplied by a CTi Model 2800 refrigerator. The refrigerator is supplied with gas from a central helium compressor house, which contains an oil-lubricated screw compressor delivering 55 gs^{-1} through 600 m of pipe. The cold box has two Sulzer gas-bearing turbine expanders and liquid nitrogen precooling. The helium refrigerator is designed to deliver 200 W at 4.5 K and about 40 liters per hour of helium when liquid nitrogen is used in the precooler. Without liquid nitrogen precooling, the refrigerator will deliver 110 to 120 W at 4.5 K. When the refrigerator was tested at CTi, it delivered 100 ℓ hr^{-1} as a liquifier and 240 W plus 15 ℓ hr^{-1} in the mixed mode with liquid nitrogen precooling.

Liquid nitrogen is delivered to the refrigerator and the conditioner tank by a transfer line from a large liquid nitrogen storage tank located outside the interaction region-2 experimental building. During normal operation, the liquid nitrogen usage is

expected to be about 50 liters per hour. During a cool-down of the TPC magnet, this usage rate will rise to 200 liters per hour.

a. Summary of Liquid Helium Refrigeration Requirements

Table 11 presents a summary of all of the static heat leaks in the TPC magnet system including the transfer lines, compensation coils and the control dewar. With the liquid nitrogen shield in operation, the static heat leak approaches 52 W; without liquid nitrogen, the heat leak rises to about 153 W.

Table 12 presents an estimate of the helium refrigeration requirements of the entire TPC magnet system, including the compensation solenoids. Table 13 presents an estimate of refrigeration required for the magnet system without the compensation solenoids or the compensation solenoid transfer lines.

We plan to operate the TPC magnet at LBL using the ESCAR refrigerator. This machine, which can deliver 1500 W of refrigeration, can cool the TPC magnet down in 10 hours. Recovery from a full current quench, where 11 MJ of stored energy is dumped into the coil, will occur in four hours. Low current quenches can be recovered in a much shorter time.

Table 14 shows the total refrigeration required during a 2000 second magnet charge. (Table 14 assumes that there are diodes across the ultrapure aluminum circuit.) Table 14 includes the charging losses of the main solenoid and both of the compensation solenoids. In theory, one can charge the TPC magnet system while it operates on the refrigerator without precooling. The liquid level in the control

Table II. An estimate of static heat leaks into the TPC magnet cryogenic system (including the compensators).

	Minimum (with LN_2)	Most probable (with LN_2)	Maximum (no LN_2)
Main TPC solenoid			
heat leaks through superinsulation	1.0	3.0	20.0
heat leaks through support struts	2.4	4.8	17.8
heat leaks through electrical leads	0.6	3.0	13.5
TPC compensation solenoids	7.0	10.1	30.0
Helium transfer lines to TPC experiment[a]	10.3	20.0	57.0
Helium transfer lines to the refrigerator[b]	3.8	5.7	7.8
Control Dewar static heat leak[c]	3.0	5.0	7.0
Total static heat leak to helium	28.1	51.6	153.1

[a]Half the transfer line heat leak is associated with the compensation solenoids.

[b]Heat from this source does not affect the enthalpy change across the helium flow circuit nor does this source of heat boil away liquid helium when the refrigerator is inoperable.

[c]Heat from this source does not affect the enthalpy change across the helium flow circuit.

Table 12. An estimate of refrigeration and liquefaction loads for the TPC magnet system with the compensators (charging losses are not included).

	Minimum (with LN_2)	Most probable (with LN_2)	Maximum (with LN_2)
Static heat leak (W)	28.1	51.6	153.1
Electrical lead gas flow (gs^{-1})	0.35	0.41	0.63
Refrigeration needed for leads C_Q = 90 Jg^{-1}	31.5	36.9	56.7
Total refrigeration[a] needed (without helium pump) (W)	59.6	88.5	209.8
Helium pump work (W)	1.7[b]	5.0[c]	12.6[d]
Total refrigeration[a] needed with helium pump (W)	61.3	93.5	222.4
Equivalent liquefaction capacity needed if 1ℓ hr^{-1} = 3.02 W (C_Q = 90 Jg^{-1})			
w/o helium pump (ℓhr^{-1})	19.7	29.3	69.4
with helium pump (ℓhr^{-1})	20.3	30.9	73.5

[a]Control dewar pressure 1.2 atm, dewar temperature 4.42 K.

[b]Based on m = 5 gs^{-1} ΔP = 0.1 atm.

[c]Based on m = 12 gs^{-1} ΔP = 0.2 atm.

[d]Based on m = 15 gs^{-1} ΔP = 0.4 atm.

Table 13. An estimate of refrigeration and liquefaction loads for the TPC magnet alone, without compensators (charging losses are not included) as in LBL and SLAC tests.

	Minimum with LN_2	Most probable with LN_2	Maximum with LN_2
Static heat leak (W)	15.9	30.5	96.1
Electrical lead gas flow (gs^{-1})	0.26	0.29	0.45
Refrigeration needed for leads (Γ_0 = 90 Jg^{-1})	23.4	26.1	40.5
Total refrigeration[a] needed (without helium pump) (W)	39.3	56.6	136.6
Helium pump work (W)	1.7[b]	5.0[c]	12.6[d]
Total refrigeration[a] needed with helium pump (W)	41.0	61.6	148.2
Equivalent liquefaction capacity needed if 1 ℓhr^{-1} = 3.02 W (Γ_0 = 90 Jg^{-1})			
w/o helium pump (ℓhr^{-1})	13.0	18.7	45.2
with helium pump (ℓhr^{-1})	13.7	20.3	49.3

[a] Control dewar pressure 1.2 atm, temperature 4.42 K.

[b] Based on m = 8 gs^{-1} ΔP = 0.1 atm.

[c] Based on m = 12 gs^{-1} ΔP = 0.2 atm.

[d] Based on m = 15 gs^{-1} ΔP = 0.4 atm.

Table 14. Refrigeration required during charging (most probable value).

Static heat leaks (W)	51.6
Helium pump work (W)[a]	5.0
Lead gas flow (gs^{-1})	0.41
Refrigeration needed for lead gas flow (W)	36.9
Charging losses in TPC solenoid (W) (5 V charge with diodes, 2000 sec charge time)[b]	37.3
Charging losses in compensating solenoids (W) (0.6 V charge, 2000 sec charge time)[c]	0.4
Refrigeration required during a charge (W)[d]	131.2

[a]The helium pump pumps at the rate of 12 gs^{-1} over a pressure rise of 0.2 atm.

[b]Fast charge at 5 V across the magnet; the leads of the ultrapure aluminum coil have diodes across it.

[c]Fast charge with 0.6 V across both magnets. The losses are in the 12.7-mm-thick bore tube; RRR = 25.

[d]TPC refrigerator is a CTi Model 2800. The design output is: 200 W with liquid nitrogen precooling or 120 W without liquid nitrogen precooling.

dewar may drop slightly during charging. The magnet refrigeration system can operate even when the refrigeration load exceeds 200 W. The only requirement is that the level of liquid helium in the dewar remain above the heat exchanger.

Table 15 summarizes the parameters for operation with liquid helium alone in the control dewar. This mode of operation is needed if the refrigerator fails due to power failure at the compressor house or turbine failure. Other forms of refrigeration failure occur slowly (i.e., the heat exchangers in the refrigerator can become coated with air gases, water, or oil). One has warning, because the capacity of the refrigerator decreases relatively slowly.

The control dewar volume is 175 liters. When a power failure (the most frequent cause of sudden refrigeration failure) occurs, the magnet automatically discharges with about 5 volts across the leads. The helium pump, which is on emergency power, is started. Around 90 liters of liquid from the control dewar is used as the magnet is discharged. One has approximately 1.5 hours to get the TPC refrigerator operating before the dewar runs dry. One can extend this time another four hours by transferring liquid helium from the 500-liter storage dewar.

The rate of helium usage while operating on liquid alone is very high. This is, in part, due to the fact that the lead gas flow is liquid carried from the pot. (A boiling pot magnet system uses boil-off gas to cool the leads. This is an important difference.) The TPC magnet is designed to run on a refrigerator; it is not designed for batch transfer liquid pot operation.

Table 15. Parameters for operation on liquid helium with the refrigerator off.

Control dewar volume	175 ℓ
System pressure	1.2 atm
Helium heat of vaporization	19.14 Jg^{-1}
(at system pressure)	2312 $J\ell^{-1}$
Heating of system during coil discharge (includes pump work)	93.7 W
Coil discharge time	2000 s
Medium mass flow through electrical leads	0.41 gs^{-1}
(during coil discharge)	12.2 hr^{-1}
Helium used during coil discharge (includes lead gas flow)	87.8 ℓ
Approximate time before control dewar runs dry (includes coil discharge time)	1.36 hr.
Estimated operating time on 500 ℓ dewar of helium with 425 ℓ of helium transferred to the control dewar during 3 fills (TPC magnet current is on)	4.25 hr

b. Summary of Liquid Nitrogen Refrigeration Requirements

Table 16 summarizes the heat loads at 80 K. These heat loads include the main coil cryostat, the compensation solenoids, the cryo-adsorption pump, the transfer line, the control dewar, and the conditioner dewar. The nitrogen flow circuit, shown in Fig. 27, is a series circuit (similar to the liquid helium circuit) that is supplied from the conditioner pot by a liquid nitrogen pump. If the nitrogen pump fails, the series flow circuit can be run directly off of a liquid nitrogen tank, using a controller similar to that shown in Fig. 24 (the flow of nitrogen is controlled by the temperature of the nitrogen leaving the flow circuit).

The pumped liquid nitrogen circuit has a number of advantages over a circuit that is run off the large nitrogen tank. They are: 1) The temperature within the shields is more constant. 2) There is no change in temperature at the end of the flow circuit. 3) Liquid nitrogen consumption is minimized. (This is true even if the nitrogen pump work is considered.)

The liquid nitrogen pump has been supplied by SLAC; it is not unlike a water pump. It is a centrifugal pump capable of pumping much more nitrogen than the 7.7 $\ell\ h^{-1}$ needed for the shields. We assumed a pump flow rate of 20 gs^{-1} (about 90 $\ell\ hr^{-1}$) and a pump efficiency of about 20 percent. As a result, we estimate the pump work to be about 10 W (see Eq. 5). At this time, some work remains to be done to obtain satisfactory operation of the nitrogen pump.

Table 15. Liquid nitrogen system heat loads and boil-off rates.

LN_2 system component	Heat load at 80 K (W)
Main TPC coil cryostat	
Through superinsulation onto shield	30
Support struts	75
Electrical leads	15
Compensation solenoids	30
Cryogenic vacuum pump (≈10ℓ per day)	20
Transfer lines	120
Control dewar shield	30
Conditioner dewar	50
Nitrogen pump work ($m = 20\ gs^{-1}$, $n = 0.2$)	10
TOTAL HEAT LOAD	380
LN_2 boil-off rate during normal operation	$7.7\ell\ hr^{-1}$
Required LN_2 volumes for a cool-down (includes refrigerator and shields)	2071ℓ
Peak LN_2 use rate during cool-down (includes refrigerator and shields)	$194\ell\ hr^{-1}$
LN_2 needed for refrigerator	$40\ell\ hr^{-1}$

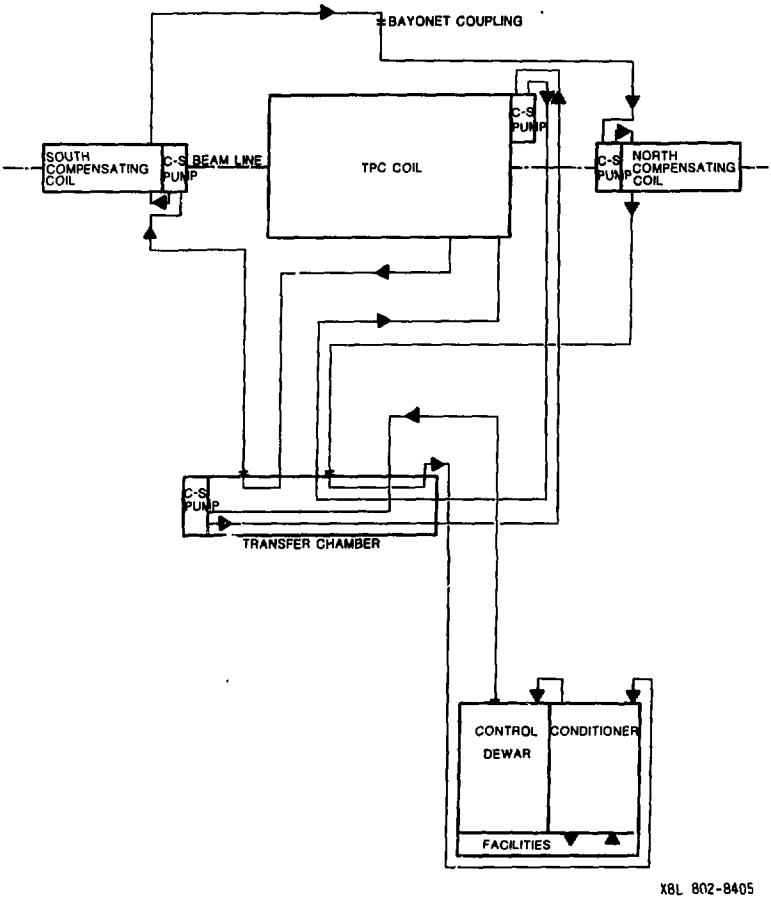

Fig. 27. Liquid nitrogen flow diagram of the TPC magnet system (includes compensation solenoids and the vacuum pump).

7. CRYOGENIC SYSTEM TESTS

This report describes the projected design behavior of the TPC cryogenic system. From April 1979 to the start of TPC magnet testing, various components of the cryogenic system were tested using liquid helium, the LBL CTi Model 1400 refrigerator, and the LBL 1500 W CTi refrigerator. This testing has resulted in the discovery of a number of problem areas. Corrections in the plumbing have resulted from these tests.

a. Tests of the Cryogenic Subsystems

The following tests were made on the TPC magnet cryogenic system: 1) The control dewar heat leak was measured by measuring helium boil-off; 2) The control dewar was measured with the transfer lines using a CTi 1400 refrigerator; 3) The control dewar and transfer lines were measured using the LBL 1500 refrigerator; 4) the control dewar and transfer lines were measured using boiling liquid calorimetry; and 5) gas-cooled electrical leads that model the TPC leads were measured at various angles.

The heat leak into the control dewar was found to be at or below the design value. Measurements made without penetrations yielded heat losses under 3 W. Measurements made with the control dewar plug in place, and with the pump and the bayonets, varied from 1.2 to about 5 W depending on the liquid level. When the control dewar was about one quarter full, we measured a heat leak of 1.2 W. When the control dewar sat overnight, the liquid level dropped from 35 to 40 percent full to 15 to 20 percent full. The average heat leak over that

17-hour period was 1.5 W. Calorimetry measurements made when the control dewar was 89 percent full showed heat leaks of 4.3 to 4.9 W depending on which method of calorimetry was used. We are inclined to believe that the 4.9 W figure is more accurate because the gas flow was measured with a positive displacement flow meter.

Good calorimetry measurements of the transfer lines were difficult to make. Problems with thermal acoustic oscillations, standpipe oscillations, and pump work confused the issue. The heat leak into the transfer lines (35 meters), the dummy load box, and the control dewar appear to be from 14 to 18 W depending on which data are used and how they are interpreted. Standpipe oscillation and thermal acoustic oscillations added as much as 40 W to those previously quoted. The last series of tests eliminated most problems. It is now believed that the transfer line heat leak is 0.25 to 0.4 Wm^{-1} with liquid nitrogen in the third tube. The estimated heat load without liquid nitrogen in the third tube is in the range of 2 to 2.5 Wm^{-1}. The only transfer lines measured were those between the control dewar and the transfer box. It is hoped that we can improve the insulation in the other lines because the heat load is about twice as large as we expected. Figure 15 shows the control dewar hooked to its transfer lines.

A pair of straight single-tube leads was used to model the TPC magnet leads and are equivalent to one-fifth of the TPC leads. The leads were fabricated from a single 15.9 mm (0.625 in.)OD type L copper pipe with 1.0 mm (0.040 in.) walls. The tampax section is a blocked stainless steel tube sized so that the clearance between the ID of the

copper and the OD of the stainless steel tube is a 0.5 mm (0.020 in.) annular space. The stainless steel tube is wrapped with a strip so the tube is centered and the gas flows in a helical pattern. The length of the lead is 533 mm (21 inches), exactly the length of the TPC leads. Since the lead is one tube instead of five, it is designed to carry one-fifth the current of the TPC leads. The nominal design current is around 600 A. The current at the cold end of the lead is carried by superconductor soldered to the leads.

One of the TPC magnet leads will operate at a 60-degree angle (cold end down) and the other will operate almost horizontally (the cold end will slope at +10 degrees, the warm end at -10 degrees.) The lead experiment was designed to operate on a dummy load box at the end of the transfer line. Two-phase helium is taken from the main stream and used to cool the leads. The lead experiment was designed to operate at angles of +22 degrees to -10 degrees (at -10 degrees the two-phase helium end of the lead is almost 100 mm above the warm end of the lead). During the experiment we measured the heat leak into the helium and the temperature profile as a function of current and gas flow. Figure 28 shows the lead experiment.

The results of the experiment are reported fully in Ref. 29, but can be summarized as follows:

1) The leads operate in a stable way over all currents where measurements were made. The leads operated well at 800 A but about one-third more gas flow was needed compared to 600 A operation. The leads appear to be overdesigned when operating at the equivalent of the TPC design current of 460 A.

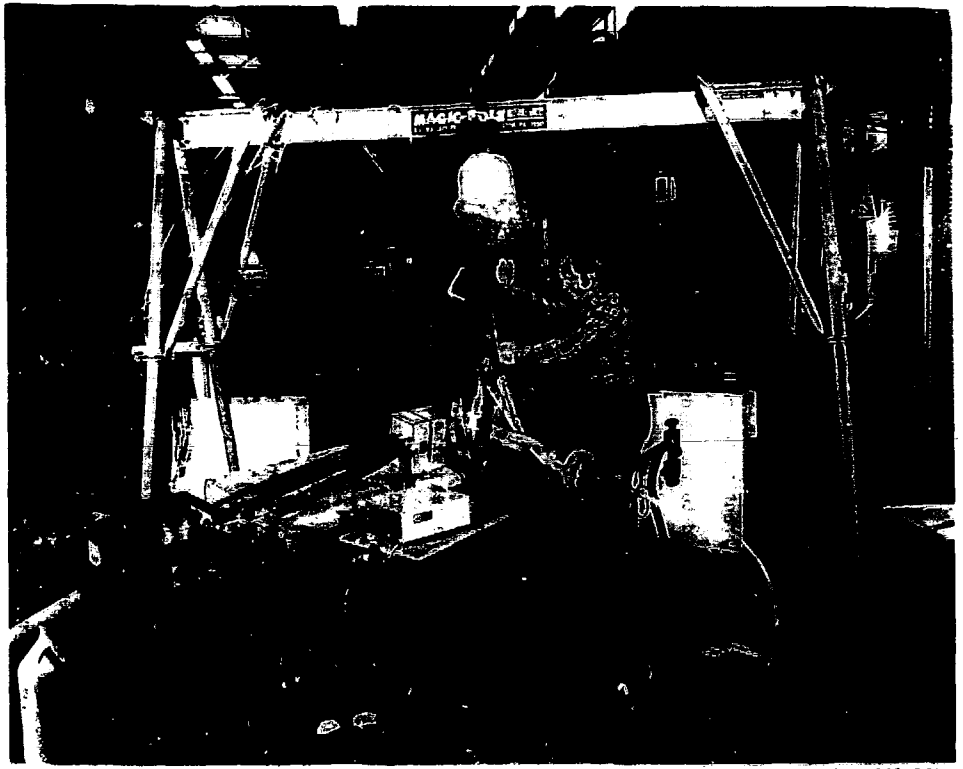

CBB 801-1212

Fig. 28. The electrical lead experiment with pumped liquid helium (the lead angle is -10°).

2) Stable operation at the design current equivalent for the TPC was achieved for gas flows as little as 0.045 gs^{-1}. Operation at 600 A required gas flows of about 0.08 gs^{-1} and operation at 800 A required about 0.11 gs^{-1}. It appears that the 0.29 gs^{-1} lead flow criterion used here is conservative for the TPC magnet leads.
3) Little change in lead performance was seen as a function of lead angle. There was slightly more, if any, heat leak into the system when the lead angle was changed from +22 degrees to -10 degrees. There was no apparent change in temperature profile voltage drop or lead gas flow.
4) The leads will probably require no control. The simple controller shown in Fig. 24 is adequate for the job. The voltage drop across the lead is a good signal for control.
5) The leads are reliable. We operated the leads without gas flow at a current of 460 A for 27 minutes. The hottest temperature in the lead was still below 100°C after 27 minutes. There is adequate time to ramp the magnet down with the power supply in the event the leads overheat. The voltage drop across the leads can be used to start the magnet dump process.
6) The electrical lead did not ice up badly even when no current was carried. There is good reason to believe that the ice ball problem will be eliminated through the use of insulation and/or heaters on the outside bus bar. The gas can be carried away from the magnet leads in an insulated Teflon tube and copper pipe.

b. The May 1980 Tests of the TPC Magnet Cryogenics

The completed TPC magnet was moved from the LBL shops to the building 64 high bay on February 29, 1980. The magnet was connected to the cryogenic transfer lines, transfer box, control dewar, and conditioner (see Figure 29). The vacuum system was closed and checked for leaks. After pumping and purging with nitrogen gas, the system was pumped down, and the vacuum stabilized at a pressure of 2×10^{-2} Torr despite being connected to the cryoadsorption pump. The 5000 square meters of aluminized Mylar outgasses a whole host of condensible substances. Liquid nitrogen was put into the shields. After one hour, the vacuum dropped to 2×10^{-4} Torr. The liquid nitrogen pump in the conditioner would not remain primed so the liquid nitrogen shields were cooled directly off the tank. After some time the shield temperature stabilized at temperatures from 95 to 115 K. The TPC magnet is designed to be cooled down using a combination of the conditioner and a refrigerator, as shown in Figure 20. Persistent failure of the Sulzer gas bearing turbine on the LBL 1500 W refrigerator has made it necessary to use the helium pump to cool the magnet from liquid nitrogen temperature to 4.5 K. Figure 30 shows how the cool-down proceeds using the helium pump instead of the refrigerator as a source of cold gas.

The temperature of the magnet was 298 K when the cool-down started. The magnet coil resistance started at 106 ohms. The ultrapure aluminum circuit resistance started at 15.7 ohms (this includes the stainless steel leads). Helium gas circulated through

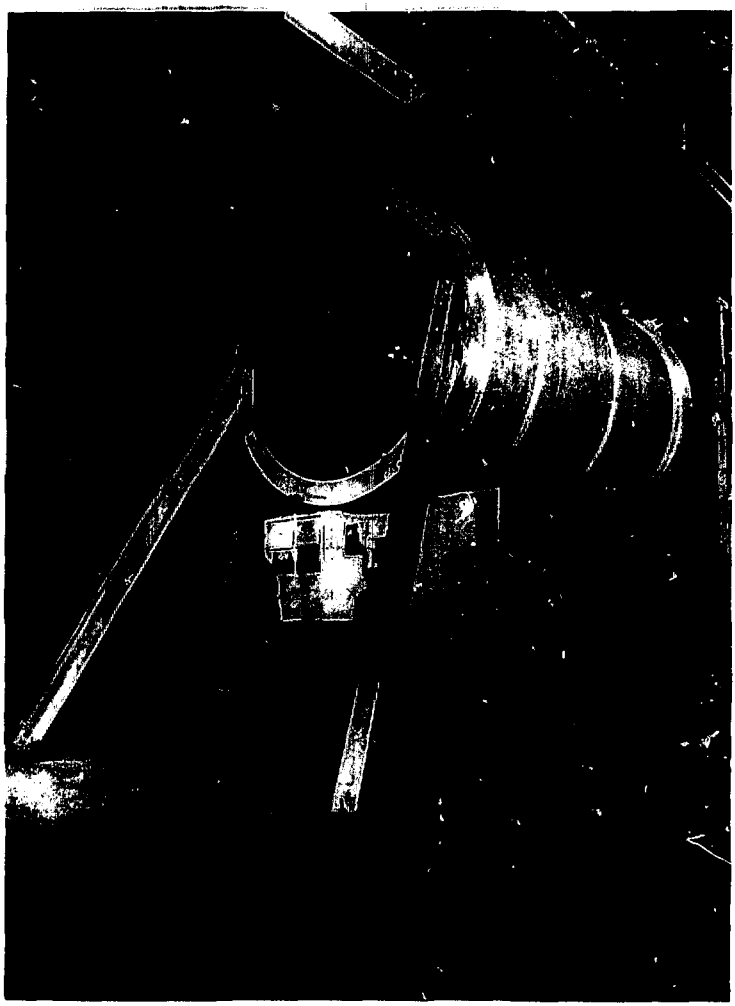

CBB 803-3247

Fig. 29. The TPC magnet mounted for the LBL test.

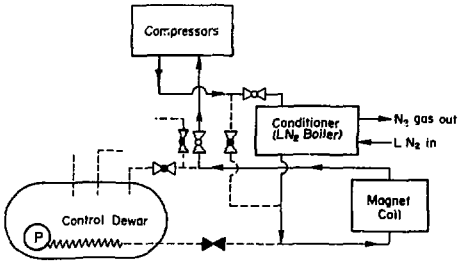

a) Cooldown from 300°K to 80°K.

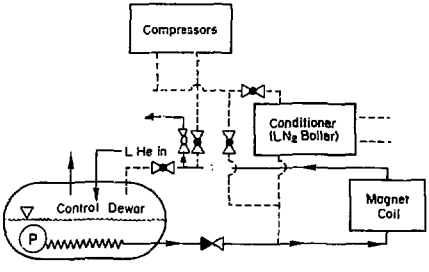

b) Cooldown from 80°K to 10°K.

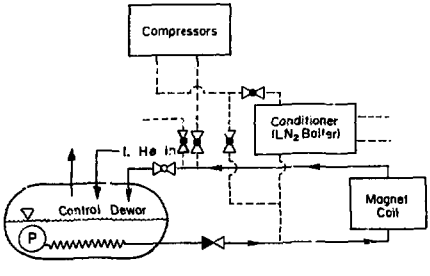

c) Normal operation at temperatures below 10°K.

XBL 805-9671A

Fig. 30. Simplified schematic diagram showing stages in the cool-down of the TPC magnet system using liquid helium in the control dewar.

the conditioner was supplied by a pair of CTi model 1400 refrigerator compressors, which are capable of supplying 10 gs^{-1} of helium. The conditioner phase of the cool-down lasted more than four days, during which the following problems, cropped up: (1) The line from the large nitrogen tank to the conditioner was too small. As a result, the nitrogen could not be delivered to the conditioner fast enough. (2) The nitrogen gas helium heat exchanger had a pressure drop on the nitrogen side that was too high. (3) The liquid heat exchanger is marginally too small.

During the first three hours of the cool-down, the magnet average temperature fell 100 degrees. Then the conditioner tank emptied. During the first phase of the cool-down, sections of the magnet cooled at the rate of 40 K per hour. Gradients of 40 km^{-1} were observed along the length of the magnet. At the end of the conditioner phase of the cool-down (see Fig. 30a), the magnet temperature leveled out at 95 K. The magnet coil resistance had dropped from 106 ohms to 18.7 ohms. The ultrapure aluminum coil resistance dropped from 15.7 ohms to 2.01 ohms. The vacuum within the cryostat insulation space was about 5×10^{-5} Torr when the magnet temperature was 95 K.

The second phase of the cool-down (from 95 K to about 6 K) used the helium pump to circulate helium through the coil. We used the helium pump this way with some misgivings because the helium pump was designed for liquid circulation at pressure differences across the pump of less than 1 atm. This phase is illustrated in Figure 30b. Approximately 50 MJ of thermal energy was removed from the magnet

system when it was cooled from 95 K to 4.8 K. About 1600 liters of liquid helium was used to cool the magnet during this phase. The helium pump was operated at pressure differences as high as 4 atm. The major problem in this phase was that we could not supply liquid helium from the 500-liter storage dewars fast enough. It took 11 hours to cool the TPC magnet system from 95 K to 4.8 K. At the end of the cool-down, when the temperature dropped from 50 K to 4.8 K, we were able to deliver 5 gs^{-1} through the magnet cooling circuit without emptying the control dewar. Just before the magnet became superconducting, coil resistance dropped to 0.65 ohms. The ultrapure aluminum circuit resistance leveled off at 0.0183 ohms (including the stainless steel leads). The vacuum in the insulation space dropped to 1.5×10^{-6} Torr with the vacuum pump valved off.

The liquid helium flow was switched into the control dewar (see Figure 30c) when the magnet temperature reached 5 K. Two phase flow was quickly established. The pump speed was increased from 17 to 26 RPM. The pump mass flow increased to about 20 gs^{-1}. The two-phase helium was phase separated in the control dewar. The gas phase was run through a gas flow meter. At 20 gs^{-1}, the pressure drop across 400 meters of cooling tube was 0.4 atm. Once stable two-phase flow was established, a helium boil-off rate of 4.2 gs^{-1} was measured. The total heat load measured in the magnet system was 80 W. The liquid level drop was measured in the control dewar; this verified the same 80 W heat load. The breakdown of the total system heat load is approximately as follows: (1) The magnet cryostat heat leak is about

20 W (this was measured during the warm-up) (2) the control dewar heat leak was about 5 W. (3) The helium pump work for 20 gs^{-1} mass flow across the pressure rise of 0.4 atm is around 20 W. (4) This leaves about 35 W of heat leak for 50 meters of transfer line, a transfer box and possible thermal acoustic oscillations in the standpipes. (The standpipe valves were left open.)

Unfortunately, the magnet was cold and superconducting for only one hour. The helium pump failed when the drive shaft connecting pin dropped out. Despite the failure, the test showed that the cryogenic system has an acceptable heat leak. Garden hose pressure drop and garden hose oscillations appear not to be a factor during two-phase flow operation. Figures 31 and 32 show temperatures and pressures during the final phase of the cool-down, during operation, and during pump failure.

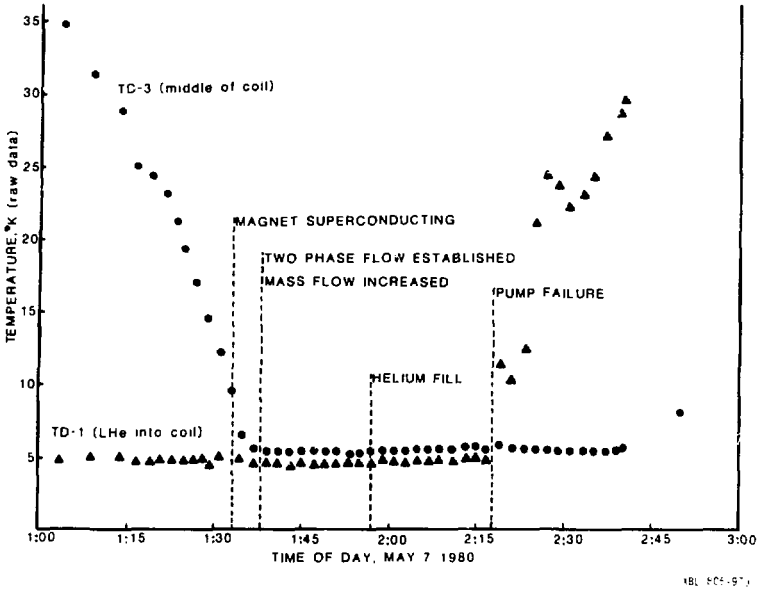

Fig. 31. Temperature of the helium input pipe and the magnet coil as a function of time of day (a.m.) during the final phases of cool-down, through normal operation, and at pump failure.

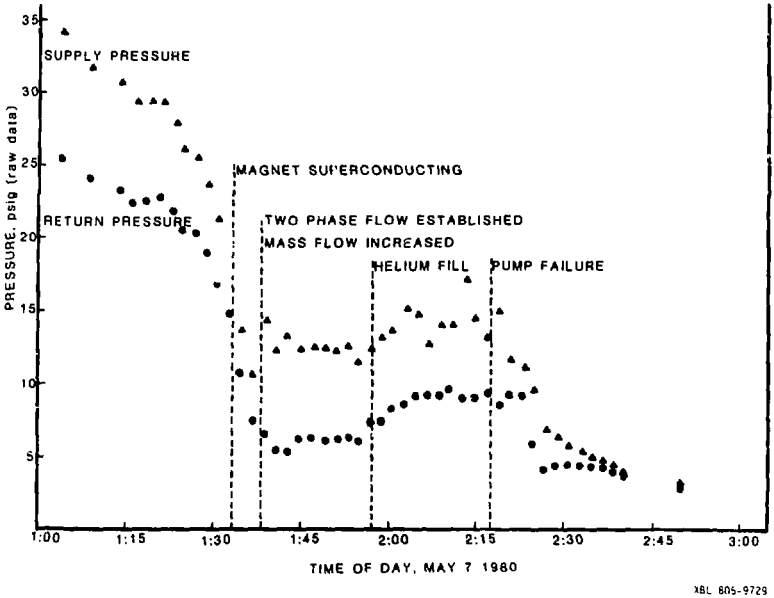

Fig. 32. Transfer line inlet and exit pressures as a function of time of day (a.m.) during the final phases of cool-down, through normal operation, and at pump failure.

ACKNOWLEDGMENTS

Paul Miller suggested the dual bellows pump concept as the basis for the liquid helium pump design. We wish to acknowledge the efforts of numerous people in the LBL shops who built much of the equipment and the support of the people in group A physics. C. Covey and E. E. Lee deserve special commendation for their efforts. R. G. Smits is acknowledged for the way he expedited the design, construction, and testing of the TPC magnet leads and other leads that were tested. We acknowledge the efforts of C. T. Day, J. W. Gary and others in helping test various components of the TPC cryogenic system.

This work was supported by the U.S. Department of Energy under Contract W-7405-ENG-48.

REFERENCES

1. M. A. Green, "The Large Superconducting Solenoid for the MINIMAG Experiment," Advances in Cryogenic Engineering, 21, 24 (1975) (LBL-3677).
2. M. A. Green, P. H. Eberhard, and J. D. Taylor, "Large High Current Density Superconducting Solenoids for Use in High Energy Physics Experiments," Proceedings of the International Cryogenic Engineering Conference ICEC-6, Grenoble, France, May 1976 (LBL-4824).
3. "A Proposal for a PEP Facility Based on the Time Projection Chamber," PEP-4 (December 1976).
4. M. A. Green, "Simplified Helium Cryostats for Superconducting Dipoles and Quadrupole Magnets," Lawrence Radiation Laboratory Report UCRL-19764, July 1970.
5. M. A. Green, "PEP-4 Experiment, Large Superconducting Solenoid, Design of Superinsulation Systems," LBL Engineering Note M5376, July 1979.
6. E. M. Sparrow and R. D. Cess, Radiation Heat Transfer, Brooks Cole Publishing Co., Belmont, CA, 1966.
7. M. A. Green, "Large PEP Detector, Large Thin Superconducting Solenoid Magnet, Cryostat Support System for the Large Solenoid Magnet," LBL Engineering Note 5011, December 1976.
8. R. D. Garfinkel, private communication on the TPC magnet and compensation magnet support systems.

9. R. B. Scott, Cryogenic Engineering, D. Van Nostrand Co., New York, 1959.

10. J. M. DeOlivares, and M. A. Green, "PEP-4 Experiment, TPC Compensating Solenoids, Basic Parameters of the Compensating Coils," LBL Engineering Note M5444A, December 1979.

11. F. Kreith, Principles of Heat Transfer, International Textbook Co., Scranton, PA. 1961.

12. H. S. Carslaw and J. A. Jaeger, Conduction of Heat in Solids, Oxford Press, London 1959.

13. Handbook on Materials for Superconducting Machinery, Metals and Ceramics Information Center, Battelle Columbus Laboratories, MCIC-HB-04, November 1974.

14. Data sheet for Linde 5A Molecular Sieve.

15. M. A. Green, "PEP Detector Development, Large Thin Coil Superconducting Solenoid Test, 25 Foot Transfer Line Construction and Test," LBL Engineering Note M488, January 1976.

16. M. A. Green, "The Development of Large High Current Density Superconducting Solenoid Magnets for Use in High Energy Physics Experiments," University of California at Berkeley doctoral dissertation, LBL-5350, May 1977.

17. M. A. Green, W. A. Burns, and J. D. Taylor, "Forced Two Phase Helium Cooling of Large Superconducting Magnets," to be published in Advances in Cryogenic Engineering, Vol. 25, LBL-9701, August 1979.

18. W. A. Burns, M. A. Green, R. R. Ross, and H. Van Slyke, "The Construction and Testing of a Double Acting Bellows Liquid Helium Pump," LBL-10977.

19. M. A. Green, "The MINIMAG Experiment, Large Superconducting Solenoid Magnet, the Cryogenic System," LBL Engineering Note M4834, June 1975.

20. "Thermophysical Properties of Helium from 2 to 1500 K with Pressures to 1000 Atmospheres," National Bureau of Standards Technical Note 631, November 1972.

21. M. A. Green, "ESCAR Mechanical Facilities, Helium Refrigeration System, Determination of the Safe Operating Point for the Hydraulic Operation of the Magnets and Transfer Lines," LBL Engineering Note M4956, August 1976.

22. O. Baker, "Design of Pipe Lines for Simultaneous Flow of Oil and Gas," The Oil and Gas Journal, Vol. 53, No. 12 (1954), pg. 185-195.

23. J. D. Taylor, and M. A. Green, "Garden Hose Test," LBL Physics Note 857, November 1978.

24. T. R. Strobridge, "The Thermodynamic Properties of Nitrogen from 64-300 k between 0.1 and 200 Atmospheres," National Bureau of Standards Report 129, January 1962.

25. M. A. Green, "Large PEP Detector, Large Thin Superconducting Solenoid Magnet, Cool Down of the TPC Thin Solenoid," LBL Engineering Note M5034, March 1977.

26. M. A. Green, "Superconducting Studies, Operating Characteristics of the CTi Model 1200 Liquifier and the Old ADL Liquifier Located in the Building 64 Superconducting Laboratory," LBL Engineering Note M4625, June 1973.

27. H. Peterson of SLAC, private communication on the CTi Model 2800 Test in Waltham, MA.

28. M. A. Green, "Large PEP Detector Large Thin Superconducting Solenoid Magnet: The Effect of Power Supply Ripple on the Superconducting Magnet," LBL Engineering Note M5030, January 1977.

29. M. A. Green, P. L. Andrews, C. T. Day, M. Pripstein, R. G. Smits, J. D. Taylor and H. Van Slyke, "Preliminary Test of the LBL Tampax Leads Operating at Angles Near Horizontal," LBID-209 (LBL Engineering Note M5524).