LBL--10631

DE82 013877

LBL-10631
EEB-Vent 80-14

A METHOD FOR MEASURING THE EXHALATION OF RADON FROM BUILDING MATERIALS

J.G. Ingersoll, B.D. Stitt, G.H. Zapalac

Energy Efficient Buildings Program
Energy and Environment Division
Lawrence Berkeley Laboratory
University of California
Berkeley, CA 94720

February 1982

This work was supported by the Assistant Secretary for Conservation and Renewable Energy, Office of Buildings Energy Research and Development, Buildings Systems Division, and by the Director, Office of Energy Research, Office of Health and Environmental Research, Human Health and Assessments Division and Pollutant Characterization and Safety Research Division of the U.S. Department of Energy under contract DE-AC03-76SF 00098.

DISTRIBUTION OF THIS DOCUMENT IS UNLIMITED

ABSTRACT

The health hazards associated with radon, a naturally occurring radioactive gas, may be significantly greater in buildings where ventilation is restricted. Since building materials such as concrete, gypsum, brick, and wood are potential sources of radon, it is important that their radon emanation rate be determined. This report presents a rapid and accurate method for determining the radon emanation rate per mass from building materials by determining simply the radon exhalation rate per unit mass. A small sample of the material is sealed in a container from one to three days. The emanated radon is then collected on glass wool cooled to liquid-nitrogen temperature and subsequently transferred to a scintillation flask where the α-activity is counted. The reproducibility errors of the measurements are on the order of 5%.

Keywords: Radon emanation, building materials, indoor radon.

A METHOD FOR MEASURING THE EXHALATION OF RADON FROM BUILDING MATERIALS

INTRODUCTION

The earth's crust contains uranium in variable concentrations of a few to several ppm on the average.[1] Radon, one of the products in the decay chain of uranium, is an inert gas and, consequently, can migrate into the atmosphere by diffusion. Because most building materials consist of matter taken from the earth's crust, they represent potential sources of radon.*

The rate at which radon emanates from building materials depends not only on the uranium content of the material but also on the fraction of radon that is free to diffuse and on the material's porosity, which determines the rate of diffusion of a gas through solid matter.[2,3,4] The porosity of a building material and the diffusible fraction, in turn, depends on physical properties of the material as well as the processing method it undergoes to reach its final form. Furthermore, environmental factors such as moisture, temperature, and barometric pressure can effectively modify the diffusion coefficient of the material and, consequently, its radon emanating power.[5,6,7] Under normal conditions, the emanation rate is believed to be less than 10% of the generation rate.[6] It is known, however, that the emanation-to-generation rate can be as high as 60%.[8]

---

*In this text, radon refers to the long-lived ($T_{1/2}$ = 3.82 days) isotope radon-222. The other two naturally occurring radon isotopes, radon-220 (thoron) and radon-219 (actinon), radioactive products in the decay chains of thorium and actinium, respectively, are not considered to be of any significance as far as radon emanation from building materials is concerned because of their very short half-lives -- 54.5 sec and 3 sec, respectively.

It is a rather straightforward task to measure the uranium or radium (precursor of radon in the decay chain) content of any material in the laboratory. Several such measurements have been performed in the past.[4,6,9] However, content measurement indicates only the amount of radon generated in the material and does not - of itself - determine the amount of radon that diffuses or escapes.

Some investigators have attempted to measure radon emanation rates directly.[2,3,4] In all of these measurements, either relatively large samples (20" x 10" x 4") have been measured in the laboratory, or radon exhalation rates were measured from portions of building walls in situ. In order to extrapolate the thus measured emanation rates to the emanation rate of any building wall or slab requires knowing the porosity and diffusion length of the material-- quantities that are not directly measured. In the research cited, investigators assumed a range of values for the porosity of a given material and, on that basis, by measuring the exhalation rate they determined by theoretical calculation the diffusion coefficient of the material. The diffusion coefficient of a material and its assumed porosity were then used to calculate the emanation rate from any wall or slab in a building. The above approach, depending on two parameters -- one assumed and the other calculated -- obviously leaves uncertain the validity of the emanation rates thus calculated. Furthermore, until now, all of the direct techniques used for measuring radon emanation rates have been either cumbersome, slow, or both; consequently, their application to extensive surveys of building

---

It should be emphasized that the term "porosity" as used in previous theoretical treatment of the emanation rate problem is a mathematically derived quantity that doe not necessarily correspond to the actual physical porosity of any given building material (see references 2 and 3).

materials would not be practical.

The scope of this paper is twofold: First, we will show that for the shapes and sizes of building materials encountered in actual buildings, detailed knowledge of the diffusion coefficient of each material is not necessary for estimating the total radon emanation rate of a building material in situ. What is necessary to know is the emanation rate per unit mass of the material. Second, we will present a method for laboratory measurement of the radon emanation rate per unit mass of any material. Besides being much more convenient, and considerably faster than methods previously used for this purpose, this new method, at least for low-level emanation rates, is as accurate, if not more so, as existing techniques. The relevant theoretical aspects of the problem will be considered before the experimental techniques are described.

RADON DIFFUSION FROM BUILDING MATERIALS

Basic Diffusion Equations

Because most building materials in a structure are in the shape of a rectangular slab whose thickness is always significantly smaller than its height and width, the diffusion of a gas through such a slab can be approximated by a one-dimensional diffusion model. The net diffusion takes place mostly along the shortest dimension, its depth; i.e., the majority of the exhaled radon gas will emanate from the surfaces of the material. Let us consider first an infinite slab whose thickness is 2L. Radon diffusion can be described by Fick's Law:

$$-D\frac{\delta C(x)}{\delta x} = F \qquad (1)$$

where

D is the diffusion coefficient of radon in the material,

C(x) is the concentration of radon in picocuries per unit volume of the medium, and

F is the flux through a plane normal to the direction of the gradient.

For the slab or wall, the gradient is normal to the surface. The exhalation rate per unit area is equal to the flux, given by:

$$E = -D \left[\frac{dC(x)}{dx}\right]_{x = L} \tag{2}$$

To determine C(x), Eq. (1) may be used with a mass balance equation over a closed volume in the slab:

$$\int \frac{\partial C}{\partial t} \, dv = \int \left[g - \lambda C \right] dv - \int \vec{F} \cdot \vec{da} \tag{3}$$

where g is the rate at which diffusible[‡] radon is generated per unit volume of the medium.

From Eqs. (1) and (3) we obtain (steady state, one-dimensional diffusion):

[‡]The adjective "diffusible" indicates essentially that g could change if the so-called porosity of the material were effectively modified, as mentioned already. Consequently, the numerical value of g refers to specific conditions. For some materials, g might be strongly dependent on these conditions while for others, slightly so or not at all.

$$\frac{d^2C}{dx^2} - \frac{1}{l^2}C + \frac{g}{D} = 0 \tag{4}$$

with

$$l = \sqrt{\frac{D}{\lambda}} \tag{5}$$

The physical meaning of the diffusion length is essentially the material thickness over which a given radon concentration attenuates by a factor 1/e if there are no sources in this region. For boundary conditions,

$$C(L) = C(-L) = 0, \tag{6}$$

the solution of this equation is easily shown to be,

$$C(x) = \frac{ge^2}{D}\left[1 - \frac{\cosh\frac{x}{l}}{\cosh\frac{L}{l}}\right] \tag{7}$$

From eq. (2), the exhalation rate from the slab is given by

$$E = gl \tanh\frac{L}{l} \tag{8}$$

Notice that if a slab-shaped material is such that two of its dimensions (length 2H; width 2W) are much larger than the third one (thickness, 2L) as well as the diffusion length of radon in it (1), then the exhalation of radon from this material obeys a one-dimensional diffusion model. The radon exhalation rate from the surface of that material can then be approximated by the rate given by Eq. (8).

Obviously, if both the diffusion length, l, and the generation rate for diffusible radon, g, are known, it is straightforward to calculate the emanation rate per unit surface, E. That exact knowledge of the diffusion length for every building material is not necessary for determining the amount of radon exhaled from a wall or slab in a building can be easily demonstrated. We modify Eq. (8) to obtain the emanation rate per unit mass, I, assuming the material density ρ.

$$I = \frac{g}{\rho} \frac{l}{L} \tanh \frac{L}{l} \tag{9}$$

For $L \rightarrow 0$ (very thin slab), $I \rightarrow \frac{\rho}{g}$, i.e.,

$$I_o \equiv \lim_{L \rightarrow 0} I = \frac{g}{\rho} \tag{10}$$

where I_o now represents the maximum amount of radon that can diffuse out of a given material. In practice, the limit of Eq. (10) implies that a slab of finite dimensions whose thickness is much smaller than its diffusion length emanates at the rate $I_o = \frac{g}{\rho}$. In other words, the amount of radon emanating from a thin slab is independent of its surface area and depends only on its mass, the latter being proportional to the total amount of diffusible radon that is generated in the slab. For a thick slab the factor $\frac{\tanh \frac{L}{l}}{\frac{L}{l}}$ in Eq. (9) expresses the fraction of the diffusible radon that escapes to the outside environment (as long as the conditions under which Eq. (8) was derived apply).

Table 1 summarizes the diffusion lengths that have been determined to date for two commonly used building materials. The diffusion length for concrete ranges from 3 to 11 inches, depending on the type of

concrete (and, most probably, the technique employed to obtain each measurement.) It appears reasonable to expect the diffusion length of other common building materials, such as gypsum and concrete block, to be no less than that for concrete, given that the porosity of these materials is no less than that of concrete. Thus, a lower limit on the diffusion length of any building material can be estimated to be in the vicinity of four inches. On the other hand, building material thicknesses range from less than one inch for plaster board to several inches for concrete slabs.

To appreciate how the emanation rate is reduced because of the thickness of the material, we present in Table 2 the numerical values of the ratio I/Io for thickness 2L from 0 to 12 inches in steps of one inch, and for diffusion lengths from one to ten inches, also in steps of one inch. This ratio, equal to tanh (L/l)/(L/l), is also plotted in Fig. 1 for four different diffusion lengths (3, 4, 5 and 10 inches) and values of 2L up to 15 inches.

As an example, we consider a four-inch-thick concrete slab (typical of residential buildings). A diffusion length of 3" would allow 87.4 % of the diffusible radon produced per unit mass to escape from the concrete, whereas if the diffusion length were 5" the escaping radon would be 95%.

What this numerical example reveals is that for materials of typical thickness, the error that would ensue from inexact knowledge of the diffusion length is relatively small. In fact, even if we assume all the diffusible radon escapes, the resulting over-estimation of the exhalation rate does not exceed 20% or 30%. This uncertainty can be easily

tolerated given (1) the magnitude of errors involved in radon emanation measurements themselves and (2) the variations of the emanation rate with regard to changes in environmental conditions (moisture, etc). Of course, since both the thickness of the material and a typical value for the diffusion length for that material are generally known, the factor $\frac{\tanh \frac{L}{l}}{\frac{L}{l}}$ can be calculated to minimize the error in calculated emanation rates.

The most important material characteristic, is therefore the diffusible radon generation rate per unit mass of the material, I_o, which, in principle, is rather straightforward to measure. For example, if we select a slab whose three dimensions are less than or equal to the diffusion length, virtually all the diffusible radon generated will escape, permitting direct measurement. If such a sample of mass M is sealed in a chamber for a period of time T and during that period emanates a total amount of radon R then

$$I_o = \frac{R}{T \cdot M} \tag{11}$$

(The system we have developed for measuring I_o is described in detail below.)

So far, our calculations have applied to rectangular slab-shaped materials in a building. Although this is the typical shape of such materials, in some cases the material is in other forms--a cylinder, for example. Fortunately, in such cases, at least one dimension of the material is comparable to or less than the corresponding diffusion length. Accordingly, we can assume that all the diffusible radon

generated escapes from the material. In that case, however, we have a measure of the validity of this approximation. It has been suspected by others[3] and verified to a certain extent by us that the surface-to-volume (S/V) ratio of the material provides a measure of the validity of this approximation. Thus from our measurements we determined that if

$$\frac{S}{V}\frac{(\text{surface in } m^2)}{(\text{volume in } m_3)} \geq 20m^{-1} \quad \text{then} \quad \frac{I}{I_o} \geq 0.95 \qquad (12)$$

Although Eq (12) is empirical in nature, it provides some information as to the fraction of radon expected to escape from a material of any shape.

TECHNIQUE FOR MEASURING RADON EMANATION

The apparatus designed to measure radon emanation from building materials consists of a sealed chamber in which test samples are placed, a transfer system to transport the radon from the chamber to a small alpha-scintillation cell, and a photo-multiplier tube (PMT) counting station to count alpha-decays in the scintillation cells. A calibration system is also part of the overall system. The calibration and transfer systems, as well as the scintillation cells, are based on designs that were developed by H. Lucas[10,11] and adapted for our purposes. In the following sections, each portion of the apparatus will be discussed in detail.

Collection system

The collection system is shown schematically in Fig. 2. The essential component of this system is the emanation chamber; the chamber itself is simply an airtight vessel in which a sample is placed. The chamber is then sealed and the radon allowed to accumulate. The actual chambers used are compressed-air 4-gallon paint cans. These cans are inexpensive, readily available, sealed easily and well, and can accommodate a sample up to 8 inches in diameter and 10 inches long. As discussed in the previous section, there is no need for larger samples and, in fact, the samples we have been using are substantially smaller.

A water trap prevents moisture that evaporates from the sample from entering the radon trap. The water trap is all glass, about 23 cm in length, and is made in two sections for disassembly and cleaning. The two sections are joined by a ground-glass joint. The inner tube's I.D.

is chosen to be no smaller than 1.7 cm to prevent it from freezing closed. This trap is kept at about -80 °C by being immersed in a Dewar filled with a mixture of dry ice and the solvent, Freon TA (E.I. DuPont de Nemours and Co., Freon Products Division, Wilmington, DE). The water trap is filled about half full with 5-mm glass beads to provide a greater surface area for the water to freeze out on. Because a considerable amount of water is collected each time a trap is used, the traps must be dismantled, cleaned, and dried after each use.

The radon traps are also all glass, but are made in one piece. They contain about 10 cm of lightly packed glass wool. During use, the trap is immersed in a Dewar filled with liquid nitrogen. The glass wool provides a large surface area for adsorbing radon. Vacuum stopcocks are used to close off the traps and insure a tight seal.

All parts of the apparatus are connected with pure latex rubber tubing. The length of rubber tubing used is kept to a minimum because a slight diffusion of radon in to the rubber is possible. A rotometer is used to measure gas-flow rates.

Helium is an effective gas for flushing the radon from the chamber to the radon trap. The helium can be tested for radon content by passing approximately 20 l directly through the radon trap, and then analyzing it. In our experiments, no detectable amount of radon has ever been found in the helium gas. A primary regulator connected directly to the compressed helium tank feeds the helium to several small secondary regulators. This arrangement has two advantages. First, several collection chambers can be operated simultaneously from one helium tank and, second, it is much easier to control the low pressures (3 psig) needed

to flush the emanation chambers through the secondary regulators. A pressure of about 50 psig is maintained in the primary feed line.

Collection Procedure Tests

Measurements are conducted by sealing a sample in a chamber for at least 24 hours which, as shown in Appendix C, is a necessary minimum for insuring accurate measurement of emanation rate. Care must be taken, however, not to leave the samples in too long. If the concentration of radon in the chamber becomes too high, back-diffusion will occur, in which case free exhalation can no longer be assumed. The actual time needed for a given sample will vary with the strength of the sample but, as a general rule, the length of time a sample should be left in, beyond the 24-hr minimum, depends on the point at which adequate counting statistics can be obtained.

In our preliminary testing, aged compressed air was used to flush the room air out of the chambers at the beginning of a test to assure that no radon would be initially trapped in the chambers. It was found, however, that the very dry compressed air drew moisture out of the concrete samples, thereby significantly changing their emanating properties. When a given sample was tested again and again, the results obtained became less and less reproducible. No general increase or decrease was noted, but the spread between measured values grew as more tests were run. These effects disappeared completely when room air was used instead (we have to account, however, for the small amount of radon in the room air contained in the chamber and make an appropriate correction to the measured radon emanation rates).

At the end of the collection time, helium is passed into the chamber and then through the two traps. The helium is injected at the top of the chamber and exhausted at the bottom to avoid any effects of helium streaming through the chamber. The helium flows through at a rate of 1 l/min until five air changes have occurred. The radon trap is sealed, removed from the apparatus, evacuated (while still immersed in liquid nitrogen), and then allowed to warm to room temperature. We found that the flow-rate of helium is not allowed to rise above 2 l/min, for above this flow rate radon begins to slip through the trap without being adsorbed. The length of flushing time and the helium flow rate were determined by extensive testing from which we concluded that greater than 99% radon could be transferred from the chamber and be adsorbed in glass wool.

Several other tests were also performed to assure that the system was operating as designed. At the onset of the study, all apparatus was designed to use ground-glass ball and socket joints and no rubber tubing was used except in the pump of the transfer system. However, these joints proved to be cumbersome and difficult to keep clean, and an alternative was sought. In the work of H. Lucas, some losses due to rubber tubing were reported.[10] Accordingly, we performed several experiments where radon from a radium solution was passed through about 3 m of rubber tubing and then collected in a radon trap; a blank of helium was then immediately passed through the same tubing and through a second radon trap. In all of the tests performed, no significant amount of radon appeared in the second radon trap (<0.4%). Almost all glass connections were then replaced with rubber tubing, which has made the method much easier and faster.

are shown along with the predicted values in Figure 40. As can be seen, the agreement is good, which is further indication of the validity of this analysis.

C = number of counts on counter

6.66= number of alphas per minute emitted by 1 pCi of radon and its daughters in equilibrium

η = efficiency with which the scintillator/counting systems detects alpha particles emitted

t_a = time sample spent in emanation chamber (min)

t_w = time between end of radon collection and beginning of counting began (min)

t_c = counting period (min)

I_o = Activity of radon in room air entering chamber at start of collection (pCi)

This equation assumes that counting begins after radon and its daughters have reached equilibrium in the scintillation cell (commonly called a Lucas cell). Its derivation is given in Appendix A.

Transfer System

The apparatus for transferring radon from the radon trap to a scintillation cell is shown schematically in Fig. 3 and is almost identical to the apparatus developed by H. Lucas.[10] The entire system was built out of 1/4" O.D. copper tubing, with necessary fittings. The Freon dry-ice cold trap serves as a last barrier against water getting into the scintillation cells.

The scintillation cells themselves were built directly from H. Lucas' design, as shown in Fig. 4. The volume of the cell is 100 ml. The only difference between Lucas' original design and the cells built by us is that the metallic shell is made of copper instead of Kovar. The interior of the cell is covered with ZnS (Ag) as a scintillation material. The quartz window, 1/8" thick, is coated on the inside with a layer of electrically conductive tin oxide to provide reproducible counting efficiencies. A peristaltic pump (Masterflex, Head No. 7015) was used. The advantage of this pump lies in the fact that the gas always stays in 1/4" latex rubber tubing and is pushed through the pump by three rollers in the head so that no radon will be absorbed in the oil or internal parts of the pump. The system is also leak-proof. As a safeguard against radon absorbing into the rubber on a highly concentrated run, thereby being available for bleeding out during a very low-level run later, the rubber tubing can be changed each day the system is used.

The purpose of the heater in the transfer system is to purge out any traces of water that may have passed through freeze-out traps in the chamber system. Even with the beaded Freon dry-ice traps, a small

amount of moisture reaches the radon traps. Heating the radon traps each time they are used prevents water from accumulating.

The vacuum lines connect to a small (3 SCFM) oil-bath vacuum pump. This system is capable of exerting a pressure of about 5 mTorr (μm of Hg), and is used mainly to clean room air and other contaminants out of the carrier lines and Lucas cells before a transfer. It is also a good method for checking leaks in either the calibration or transfer systems. Helium, at a few pounds pressure, must also be supplied for use as a flush gas.

Transfer Procedure Tests

The transfer sequence, is carried out as follows: With the radon trap closed and the Lucas cell open to the system, we successively evacuate and fill the system with helium three times to purge out all traces of room air and any radon left from previous runs. The peristaltic pump is turned on to fill the Lucas cell with helium and turned off when the system (with the Lucas cell) is evacuated. After the purging, the radon trap is opened to the transfer system, and the peristaltic pump turned on again. Using the two valves on the helium inlet line, we fill the reservoir (segment of tubing) between the valves with helium and then dump it into the transfer system. This burst of helium floods the radon trap and is then carried over to the Lucas-cell side of the pump, taking the radon with it. The size and pressure of the helium reservoir is adjusted in such a way that five or six transfers of helium brings the Lucas cell up to atmospheric pressure. Atmospheric pressure in the Lucas cell is desirable so that no gas leaks into or out of the Lucas cell.

The Lucas cell must be left for at least 3 hr after it has been filled before it can be counted. In this time period, the short-lived radon daughters in the cell (longest half-life of about 27 min) grow into equilibrium with the radon. From then on, three alphas are given off for each radon atom that decays.

We subjected this system to an extensive series of tests to assure that the radon traps and the transfer apparatus were functioning as planned. At this time, the glass wool-liquid nitrogen radon traps had not been developed and activated charcoal traps, chilled to dry-ice temperatures, were being used. The charcoal traps (a standard method for capturing radon) were exactly the same as the glass wool traps except that the charcoal traps had to be heated to about 400 ^{o}C to desorb the radon. To determine whether the radon was completely desorbing from the charcoal, several tests were made in which a known amount of radon was collected in a charcoal trap and then three Lucas cells were filled from the trap. The first cell (I_1) was filled as described above. For the second cell (I_2) the charcoal trap was left on the transfer apparatus but its stopcocks were closed, thus transferring any radon left in the copper tubing, or in the rubber tubing of the pump, into the Lucas cell. For the last cell (I_3), the stopcocks of the charcoal trap were opened, and the transfer process was repeated. This test indicated the amount of radon left in the charcoal trap after the first transfer. The results of these tests are given in Table 4. As we gained experience in operating the transfer system, the amount of radon left in the charcoal trap after a transfer dropped to below 0.25% of the total load of radon.

Tests were also performed to make sure that no radon was escaping through the radon trap. Two charcoal traps were placed in series and connected to a radon source (see "Calibration System"). In all cases, less than 0.4% of the radon passed through the first trap.

When the change was made to glass wool radon traps, a similar set of tests was run with two traps connected in series. If any radon passed through to the second trap, the amount was too low to be detected.

Calibration System

In order to determine the collection efficiency of the radon trap and the counting efficiency of the Lucas cell system, it is necessary that a known amount of radon be available for collection, transfer, and counting. To this end, we used the apparatus shown in Fig. 5. The radon is obtained by bubbling helium through a solution containing a known amount of Radium-226. This solution is prepared following a procedure outlined by H. Lucas.[10]

The glass wool trap is connected to the inlet of the radium solution flask to make sure that the helium entering the radium solution flask is radon-free. The two glass traps following the bubbler trap any water that may have been transferred from the radium solution by the helium. The first of these traps is left empty so that the water will freeze and not clog the helium passing through it. The second trap is filled with 5-mm glass beads to provide a larger surface area to catch the last traces of moisture. The entire system was originally made of glass; however, this proved to be very fragile. Occasionally, as a piece was broken, it was replaced with a section of copper tubing, which has

proved to be just as workable and much sturdier.

Two different types of radium solutions were prepared. In all previous work, radon has been permitted to reach equilibrium with the source radium. This procedure requires that the bubbler be sealed for at least three weeks while the radon grows into equilibrium. Once the radon is purged from a bubbler, it must be resealed for another three weeks before reuse. Four of these bubblers were prepared, each containing 20.7 pCi of radium. Because of the unpracticality of calibrating approximately 20 Lucas cells with only four bubblers (each of which can be used only once a month) a much stronger (~4300 pCi) radium solution was prepared. This solution produces 10.3 pCi of radon in 20 min. By accurately timing how long the radon is flushed from the bubbler, a precise amount of radon can be delivered. This bubbler also has the advantage of gathering different amounts of radon simply by varying the time that the bubbler is flushed. Use of this method requires that, before radon is collected, the large bubbler is well purged with helium to clean out all the radon that has accumulated in the bubbler.

Calibration Procedure

To use the equilibrium bubblers, the tubing and water traps are evacuated and then filled with helium three or four times to clean out any traces of leftover radon or room air. A flow of 1 l/min helium is maintained throughout the system. The flow is then diverted through the radon trap, and the stopcock opened on the radium bubbler. The flow of helium is then forced to flow through the radium solution. After a sufficient time period (about 20 min), the radium bubbler is closed and helium is allowed to flow through the rest of the system for another

five min. This procedure carries the last traces of radon from the tubing and into the radon trap, The trap is ten sealed and evacuated, and the radon is transferred to a Lucas cell for counting.

The procedure for using the continuous bubbler is similar expect that helium purges the bubbler for 20 min before it is closed off and the system evacuated. The time used to calculate how much radon is collected starts when the bubbler is closed after purging and ends when the bubbler is closed after bubbling.

A series of experiments was carried out on this apparatus to insure its proper functioning. To check that the only source of radon was the radium bubbler, helium was passed through the entire system expect for the bubbler. No significant radon was collected in these tests. The amount of radon left in the tubing after a calibration run was determined by connecting a second radon trap to the system immediately after the first was removed, and the flushing more helium through the tubing and radon trap. No significant amounts of radon were ever collected in these back-up traps.

The results of the calibration runs are given in Table 5. The overall efficiency of the cells for alpha detection was found to be 80.4% with a standard deviation of 2.9%. It soon became apparent that the number of calibration runs necessary to obtain a statistically meaningful efficiency for every Lucas cell was prohibitive. Consequently, a method was devised to determine how well the efficiencies determined in detail for a few cells would represent all cells. In these tests, several Lucas cells, including cells already calibrated, were evacuated and then filled with radon from a Tedlar bag. By counting the cells, we

determined that the counting efficiencies of all cells were the same. When the shift was made to glass wool radon traps, a similar set of calibration tests were made, yielding results that were the same as the charcoal traps in all aspects.

In calculating the efficiencies of the Lucas cells by means of a continuous bubbler, the following formula was used:

$$\eta = \frac{C}{6.66\ I_{R_\alpha}(1 - e^{-\lambda t_a})(1 - e^{-\lambda t_c})e^{-\lambda t_w}} \qquad (14)$$

where η is the efficiency and

C = # of counts recorded

I_{R_α} = activity of radium solution (pCi)

t_a = time radon was flushed from bubbler λ = decay constant of radon, $1.26 \times 10^{-4} min^{-1}$

t_w = time between when flushing ended and counting started

t_c = time Lucas cell was counted

6.66 = number of alphas per minute from 1 pCi of radon and its daughters in equilibrium.

Eq. (14) is derived in Appendix B.

CONCLUSIONS

The system described has been in operation at LBL for over a year. As noted previously, its advantages over similar systems are that it is

a fast, accurate, and inexpensive way to measure emanation rates from relatively small samples of materials. It is ideal for surveying building materials for radon emanation rates, the purpose for which it is currently being used at LBL.[11]

The usefulness and flexibility of the radon measuring system described here can be further enhanced if it is coupled with a gamma-ray spectroscopy system capable of measuring the amount of radium or uranium present in a material. If we have this information, and know the amount of radon emanated from the same material, we can determine the ratio of escape-to-generation for that material. Knowing this ratio may prove to be very useful in determining whether any pattern of radon exhalation exists for certain classes of materials or from all materials.

In any case, these measurement techniques can be effectively used to estimate the amount of radon exhaling from walls, slabs, and other structural components in a building simply on the basis of laboratory measurements of sample materials. A survey of building materials from across the U.S., mainly concrete but also gypsum-board, bricks, and wood, was conducted in 1979-80. The results of this survey are reported in another publication.[11]

Appendix A. Determination of Emanation Rate from Counting Rate in a Sample

Let N be the number of atoms in the chamber and ξ the emanation rate in atoms per unit time. Then

$$\frac{dN}{dt} = -\lambda N + \xi, \tag{A1}$$

where λ is the half-life of radon. If there are no radon atoms in the chamber at the time it is sealed,

$$N\ (t) = \frac{\xi}{\lambda}\ (1 - e^{-\lambda t}), \tag{A2}$$

assuming λ is constant. If the time between sealing the chamber and terminating collection is t_a, the radon activity I_a in the chamber at that time is

$$I_a = \xi\ (1 - e^{-\lambda t_a}). \tag{A3}$$

Furthermore, if a time t_w elapses from the end of collection until the beginning of counting, the activity of the same radon at the beginning of counting is

$$I_{a,w} = \xi\ (1 - e^{-\lambda t_a})e^{-\lambda t_w} \tag{A4}$$

During the counting, the activity further diminishes according to the equation

$$I_{a,w}(t) = \left[\xi\ (1 - e^{-\lambda t_a})\ e^{-\lambda t_w}\right]e^{-\lambda t} \tag{A5}$$

where t=o at the beginning of counting. Presuming radon and its short-lived daughters (RaA, RaB, RaC, and RaC′) have been permitted to reach equilibrium in the Lucas cell, there are three alpha decays for each radon alpha decay, since RaA and RaC′ are also alpha emitters. Hence, the counts C registered during the counting period t_c are:

$$C = 3\eta \int_0^{t_c} I_{a,w}(t)\, dt$$

or

$$C = 3\,\eta \left[\xi\,(1 - e^{\lambda t_a})\, e^{-\lambda t_w}\right] \frac{1 - e^{-\lambda t_c}}{\lambda} \qquad \text{(A6)}$$

where η is the efficiency of the Lucas-cell phototube system for detecting and counting alpha decays. Thus,

$$\xi = \frac{\lambda C}{3\eta\,(1 - e^{-\lambda t_a})\,(1 - e^{-\lambda t_c})\, e^{\lambda t_w}} \qquad \text{(A7)}$$

Since 1 pCi gives off 2.22 decays per min, ξ from Eq. (A.7) can be transferred to give the emanation rate, R, or the sample per unit time in pCi/hr, as follows:

$$R = \xi\,\lambda\, \frac{1\text{pCi}}{2.22\text{counts/min}}\, \frac{60\text{min}}{\text{hr}}$$

with λ expressed in min^{-1}. Thus

$$R = \frac{60\lambda^2\, C}{6.66\eta\, e^{-\lambda t_w}(1 - e^{-\lambda t_a})\,(1 - e^{-\lambda t_c})} \qquad \text{(A8)}$$

If an initial activity, I_o, was present in the chamber at the time it was sealed, it can be readily shown that R is given by:

$$R = \left[\frac{\lambda C}{6.66\eta\, e^{-\lambda t_w}(1 - e^{-\lambda t_c})} - I_o\, e^{-\lambda t_a} \right] \frac{\lambda \cdot 60}{(1 - e^{-\lambda t_a})} \quad \text{(A9)}$$

Appendix B. Determination of Lucas Cell Efficiency

Using Eq. (A8) where the emanation rate, R, is calculated, we can solve for ξ since, in this case, $R = I_{Ra}$, the activity of the radium solution. Thus,

$$\eta = \frac{60\lambda^2 C}{6.66\ I_{Ra}\ e^{-\lambda t_w}(1 - e^{-\lambda t_a})(1 - e^{-\lambda t_c})} \qquad \text{(B1)}$$

All the symbols in Eq. (B1) have the same meaning as before, and I_{Ra} is expressed in pCi/h while λ is in min^{-1}.

Appendix C. Selection of Minimum Radon Accumulation Time in Chamber.

If I_c is the activity in the chamber and E_c is the activity due to emanation from a sample, then (see Appendix A)

$$I_c = E_c \ (1-e^{-\lambda t}) \tag{C1}$$

The rate of change of E_c with respect to Ic is:

$$\frac{\Delta Ic}{\Delta E} = \frac{\delta E}{\delta I_c} = \frac{1}{(1 - e^{-\lambda t})} \tag{C2}$$

The following table can be constructed on the basis of Eq. (C2):

Table C.1. Rate of change of E_c with respect to I vs. time

t (hr)	dE/dI
2	66.5
4	33.5
6	22.5
8	17.0
10	13.7
12	11.5
14	9.94
16	8.76
18	7.84
20	7.11
22	6.51
24	6.02

As indicated, after 24 hours the rate of change of E_c with respect to I decreases very slowly such that the error in measuring E_c remains relatively constant. Consequently, a sample retention time in the chamber of 24 hours would be adequate with regard to measuring the emanation rate of the sample.

REFERENCES

1. N. Jonassen and J.P. McLaughlin. 1976. Radon in Indoor Air, I. 1976. Lingby: Technical University of Denmark, Laboratory of Applied Physics I (Research Report 6).

2. M.V.J. Culot, H.G. Olson, and K.J. Schiager. 1976. Effective Diffusion Coefficient of Radon in Concrete: Theory and Method for Field Measurements. Health Physics, 30: 263-270.

3. N. Jonassen and J.P. McLaughlin. 1978. Exhalation of Radon-222 from Abstract in The Building Materials and Walls. Natural Radiation Environment III: Summary Papers. (Conference held April 23-28, 1978 at Houston, Texas. Paper available from the authors, Laboratory of Applied Physics I, Technical University of Denmark, Lyngby.)

4. E.M. Drisiak, S.I. Targov, V.P. Shamov, N.I. Shalak, E.P. Lisachenko, and L.G. Gomelsky. 1971. A Study on Radio-activity of Building Materials. Leningrad: Leningrad Research Institute for Radiation Hygiene.

5. N. Jonassen and J.P. McLaughlin. 1977. Radon in Indoor Air, II. Lingby: Technical University of Denmark, Laboratory of Applied Physics I (Research Report 7).

6. United Nations, Scientific Commission on the Effects of Atomic Radiation [UNSCEAR]. Sources and Effects of Ionizing Radiation, Annex B, United Nations, 32nd sess., Suppl. 40, 1977, p. 75. A report of UNSCEAR to the General Assembly, with annexes.

7. A.B. Tanner. 1964. Radon Migration in the Ground: A Review. In The Natural Radiation Environment, J.A.S. Adams and W.M. Lowder, eds., pp. 161-190. Chicago: University of Chicago Press.

8. J.C. Rodgers. 1979. Private communication.

9. E.I. Hamilton. 1971. The Relative Radioactivity of Building Materials. Am. Ind. Hygiene Association J., 32: 398-403.

10. H.F. Lucas, Jr. 1964. A Fast and Accurate Survey Technique for Both Radon-222 and Radium-226. In The Natural Radiation Environment, J.A.S. Adams and W.M. Lowder, eds. Chicago: University of Chicago Press.

11. J.G. Ingersoll, 1980. A Survey of Building Materials Used in the United States: Radionuclide Contents and Radon Emanation Rates. Lawrence Berkeley Laboratory Report, LBL-11771 (submitted to Health Physics).

12. H.F. Lucas. 1957. Improved Low-Level Alpha-Scintillation Counter for Radon. Rev. Sci. Instrum., 28: 680-683.

Table 1. Diffusion lengths of building materials

Material	Diffusion Length (inches)	Reference Source
Concrete:		
Heavy	4,5,6	(2) (3) (4)
Alum shale light	3	(2)
Light	9,11	(4)
Brick:	6	(4)

Table 2. Numerical values of the ratio $I/I_o = \tanh (L/l)/(L/l)$

Material Thickness 2L (inches)	Diffusion Length l (inches)									
	1	2	3	4	5	6	7	8	9	10
0	1.000	1.000	1.000	1.000	1.000	1.000	1.000	1.000	1.000	1.000
1	0.924	0.980	0.991	0.995	0.997	0.998	0.998	0.999	0.999	0.999
2	0.762	0.924	0.965	0.980	0.987	0.991	0.993	0.995	0.996	0.997
3	0.603	0.847	0.924	0.956	0.971	0.980	0.985	0.988	0.991	0.993
4	0.482	0.762	0.874	0.924	0.950	0.965	0.974	0.980	0.984	0.987
5	0.395	0.679	0.819	0.887	0.929	0.946	0.960	0.969	0.975	0.980
6	0.332	0.603	0.762	0.847	0.895	0.924	0.943	0.956	0.965	0.971
7	0.285	0.538	0.706	0.804	0.863	0.900	0.924	0.941	0.952	0.961
8	0.250	0.482	0.653	0.762	0.830	0.874	0.904	0.924	0.939	0.950
9	0.222	0.435	0.603	0.719	0.796	0.847	0.882	0.906	0.924	0.938
10	0.200	0.395	0.559	0.679	0.762	0.819	0.559	0.887	0.908	0.924
11	0.182	0.361	0.518	0.640	0.728	0.790	0.835	0.867	0.892	0.910
12	0.167	0.332	0.482	0.603	0.695	0.762	0.811	0.847	0.874	0.895

Table 3. Results of reproducibility study in emanation chambers

Sample	Lag Time (min)	Activity (pCi) at given reference time[a]
1	102	7.7
2	107	7.7
3	1194	8.1
4	1194	7.9
5	1285	8.6

[a] Average activity 8.00 pCi; standard deviation as percentage of the average activity: 4.7%.

Table 4. Results of test to determine amount or radon left in transfer system after a radon trap is transferred.

run #	I_1 (pCi)	I_2 (pCi)	I_3 (pCi)	$(I_3/I_1) \cdot 100$
1	13.9	0.042	1.88	13.5
2	13.7	0.005	0.054	0.39
3	13.6	0.023	Not detectable	0
4	13.6	0.035	0.031	0.23
5	13.7	0.013	0.432	3.2
6	13.6	0.045	0.042	0.31
7	13.9	0.229	0.74	5.3
8	13.6	0.600	0.036	0.27
9	13.6		0.025	0.18
10	13.6		0.030	0.22
11	13.6		0.019	0.14
12	14.7		0.036	0.25

Table 5. Summary of calibration test of Lucas cells[a]

Cell #	Efficiency η
1	0.792
2	0.828, 0.758
3	0.836, 0.761
4	0.812, 0.812, 0.808
5	
6	0.806, 0.790, 0.817, 0.818[b]
7	0.793
8	0.785, 0.834, 0.810[b]
9	0.799, 0.757
10	0.836, 0.823, 0.779, 0.800[b]
11	0.820, 0.782, 0.777, 0.837[b]
12	0.823, 0.817, 0.792

[a] Number of runs = 29; average efficiency = 0.804. Standard deviation as percent of average efficiency = 2.9.

[b] Denotes that test was made with an equilibrium bubbler; all other tests were made using the continuous bubbler.

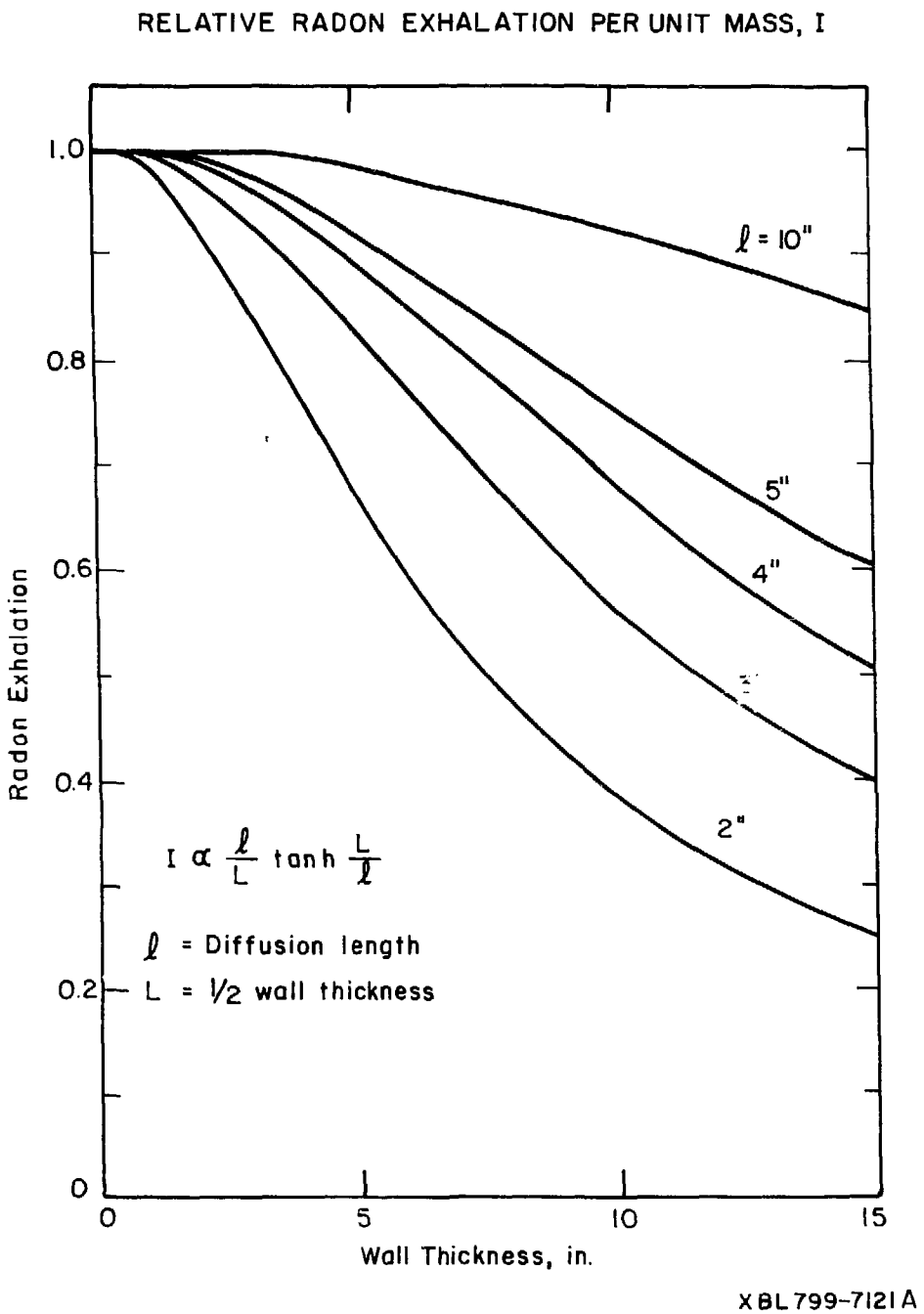

Figure 1. Fraction of radon exhalation from a slab as a function of slab thickness for different slab diffusion lengths.

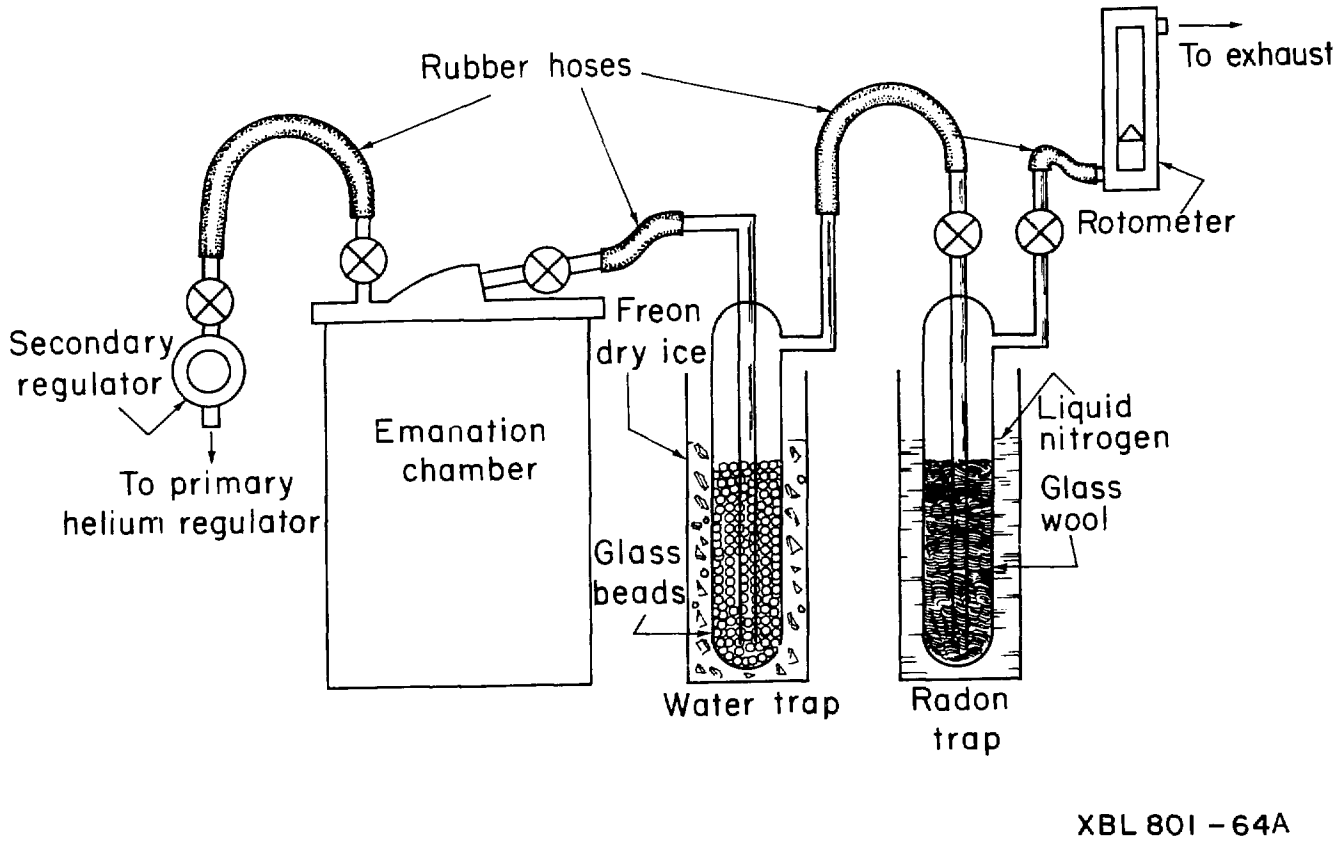

Figure 2. Collection system.

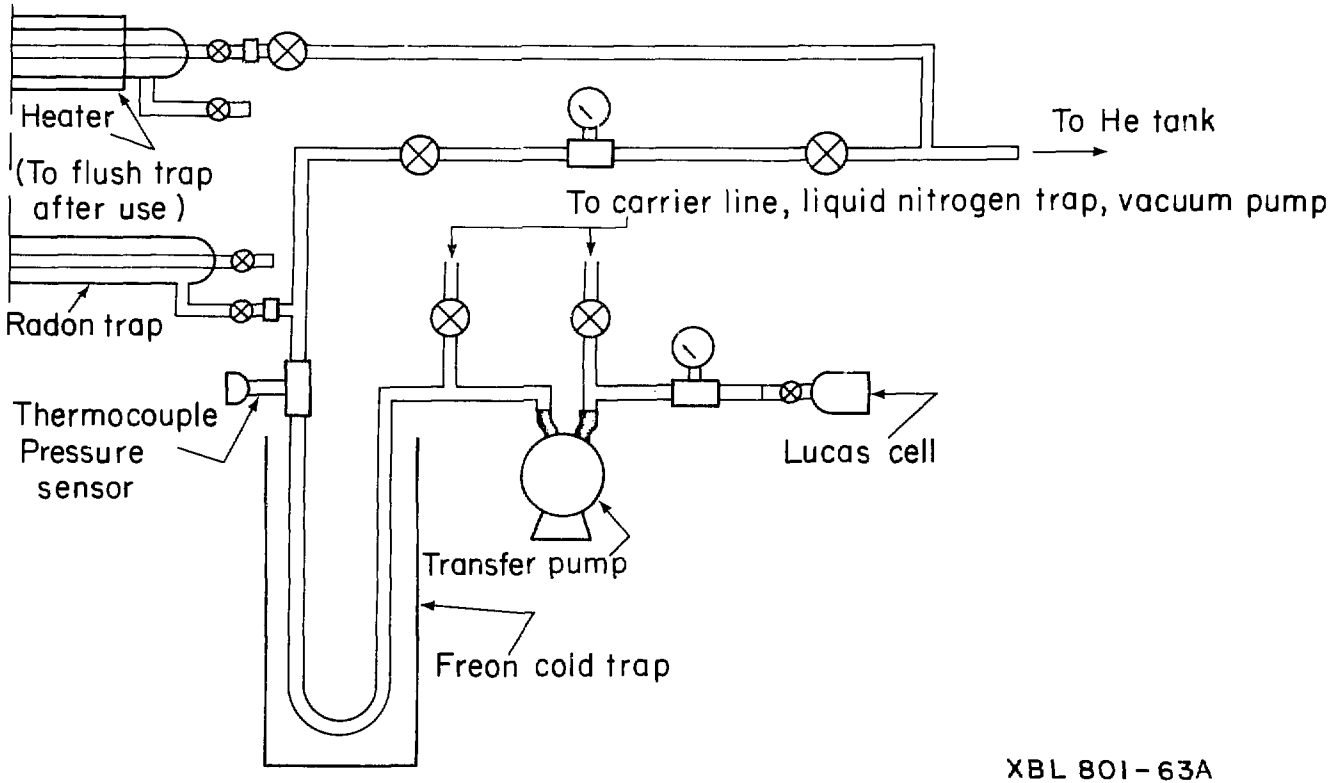

Figure 3. Transfer system.

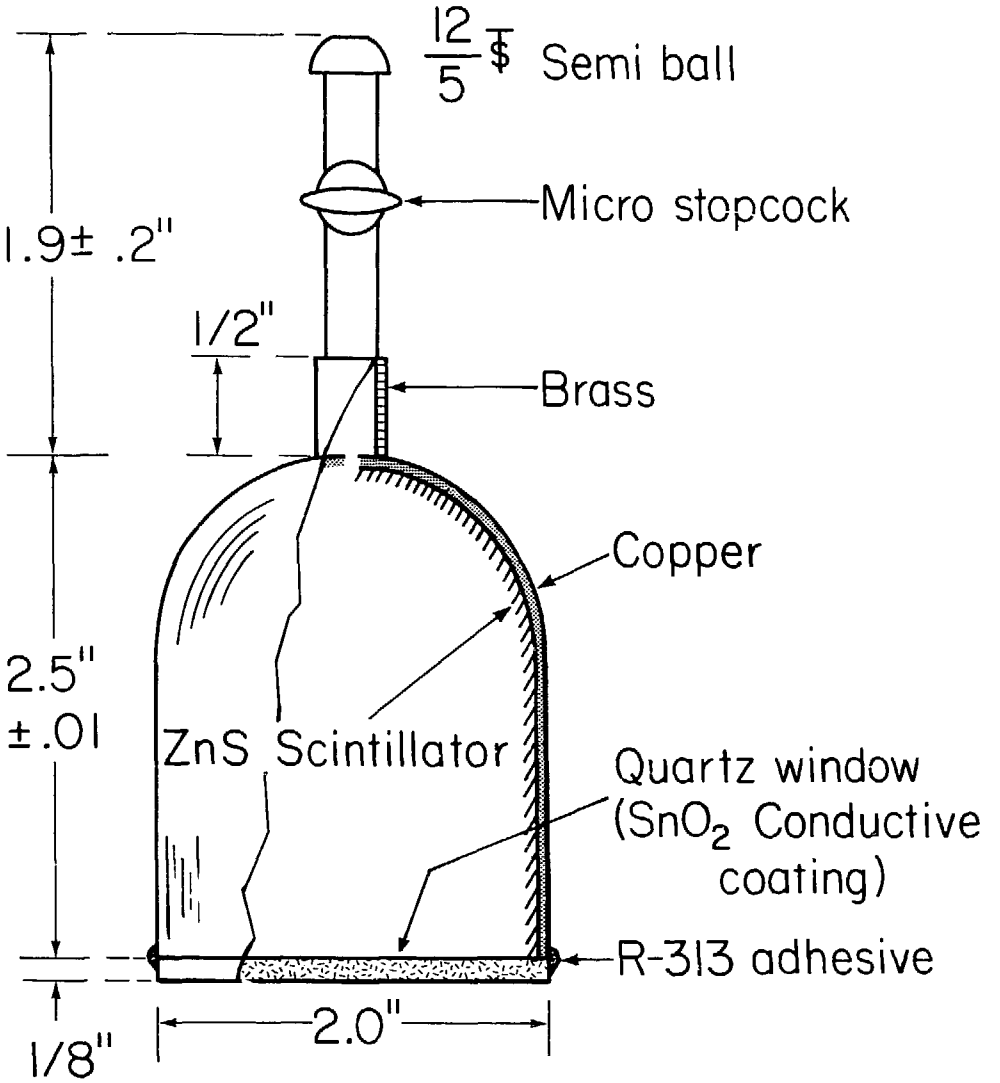

XBL 804-595

Figure 4. Scintillation cell.

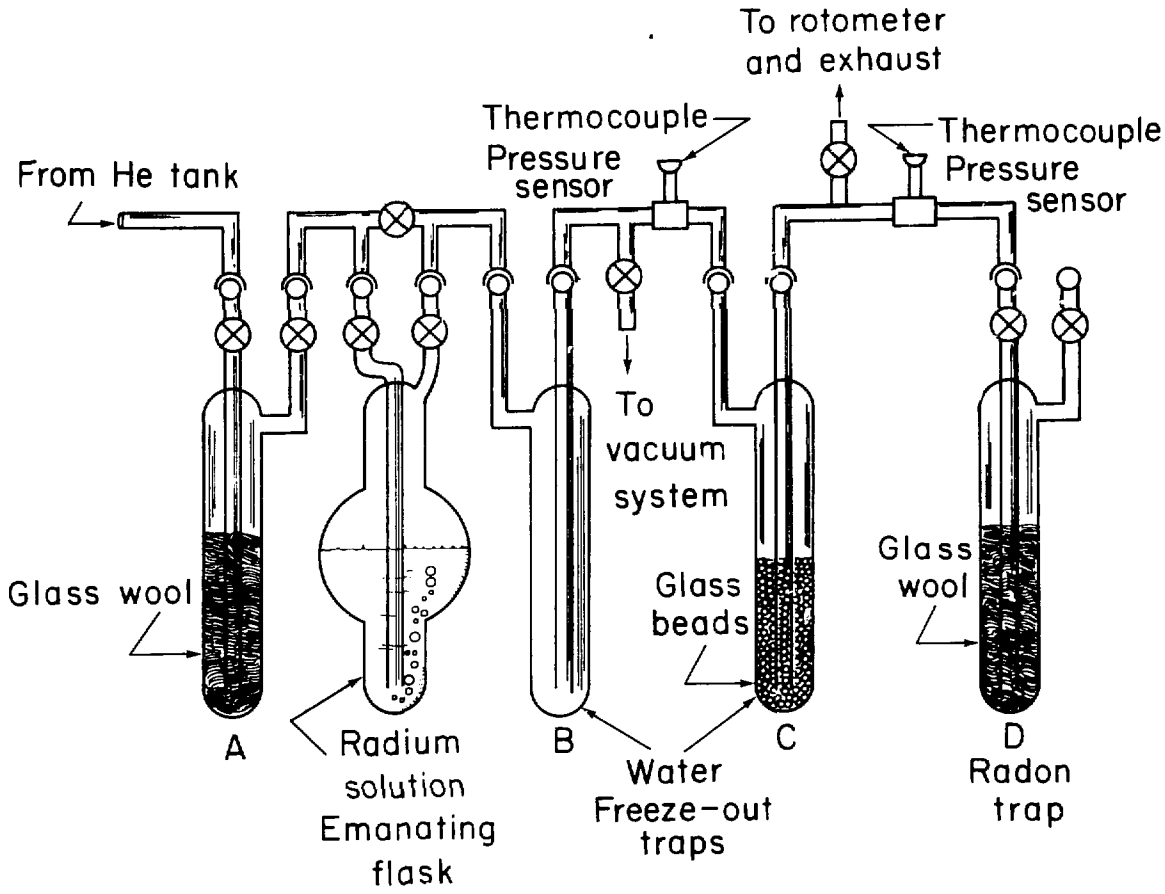

XBL 801 - 65A

Figure 5. Calibration system.