LBL-10825 c.2

Lawrence Berkeley Laboratory
UNIVERSITY OF CALIFORNIA

ENERGY & ENVIRONMENT DIVISION

To be presented at the American Society of Mechanical Engineers
Winter Annual Meeting, Chicago, IL, November 16-21, 1980

DYNAMIC MODELING AND EXPERIMENTAL SIMULATION OF ACTIVE SOLAR ENERGY SYSTEMS FOR THE EVALUATION OF CONTROL STRATEGIES

Steven R. Schiller, Mashuri L. Warren, and Michael Wahlig

July 1980

TWO-WEEK LOAN COPY
This is a Library Circulating Copy
which may be borrowed for two weeks.
For a personal retention copy, call
Tech. Info. Division, Ext. 6782.

RECEIVED
LAWRENCE
BERKELEY LABORATORY
AUG 15 1980
LIBRARY AND
DOCUMENTS SECTION

LBL-10825 c.2

Prepared for the U.S. Department of Energy under Contract W-7405-ENG-48

DISCLAIMER

This document was prepared as an account of work sponsored by the United States Government. While this document is believed to contain correct information, neither the United States Government nor any agency thereof, nor the Regents of the University of California, nor any of their employees, makes any warranty, express or implied, or assumes any legal responsibility for the accuracy, completeness, or usefulness of any information, apparatus, product, or process disclosed, or represents that its use would not infringe privately owned rights. Reference herein to any specific commercial product, process, or service by its trade name, trademark, manufacturer, or otherwise, does not necessarily constitute or imply its endorsement, recommendation, or favoring by the United States Government or any agency thereof, or the Regents of the University of California. The views and opinions of authors expressed herein do not necessarily state or reflect those of the United States Government or any agency thereof or the Regents of the University of California.

DYNAMIC MODELING AND EXPERIMENTAL SIMULATION OF ACTIVE SOLAR ENERGY SYSTEMS FOR THE EVALUATION OF CONTROL STRATEGIES

STEVEN R. SCHILLER*, MASHURI L.WARREN, and MICHAEL WAHLIG

Lawrence Berkeley Laboratory
University of California
Berkeley, California

ABSTRACT

Dynamic modeling and experimental simulation are used to evaluate control strategies for active solar energy systems. Performance of proportional and on/off collector loop controllers are evaluated and compared using a theoretical dynamic collector model. Use of the experimental test facility at Lawrence Berkeley Laboratory for evaluating the affect of controls and control strategies on hydronic space heating system performance is also discussed.

Both the computer model and the test facility allow evaluation of control strategies using various flow rates, controller set points, insolation patterns, ambient temperature conditions, and collector types. The test facility also allows comparison of collector and load loop flow strategies based on various system configurations and building load demands.

NOMENCLATURE

C_a	Effective value of collector capacitance, per unit area
c_p	Thermal capacitance of circulating fluid
F'	Plate fin efficiency factor
K	Proportional control constant
K_{flow}	Represents the fluid flow rate, per unit area
K_{gain}	Represents the collector's gain from insolation and losses to the environment, per unit area
$\dot{m}_c$	Maximum fluid mass flow rate
S	Rate of absorption of solar insolation by collector plate, per unit area
t	Time
T_a	Ambient temperature
TM	Ambient temperature calculation constant
TO	Ambient temperature calculation constant
$T_{f,x}$	Fluid temperature at position x
T_{in}	Inlet fluid temperature
T_{out}	Outlet fluid temperature
U_L	Collector loss coefficient, per unit area
W_c	Width of collector in the direction of flow
x	Displacement in flow direction
γ	Pump control indicator
ΔT_{max}	Temperature across collector at which flow rate saturates to its maximum, for proportional control
ΔT_{off}	Temperature rise across the collector sufficiently low to turn off the pump
ΔT_{on}	Temperature rise across the collector sufficiently high to turn on the pump

[*] Associate Member A.S.M.E.

INTRODUCTION

Control systems play a vital role in determining the overall performance of solar energy systems. If a control system has been improperly designed, or if it is not functioning correctly, it can seriously degrade performance. Since controller performance can be improved with little or no increase in initial system cost, reliable and efficient controllers can lead to cost-effective improvements in new and existing designs. Thus, this project was undertaken to determine the relative merits of various control strategies, so that solar system manufacturers and designers will be able to make cost-effective improvements in system efficiencies.

Predictions of improved system performance are obtained by assessing the relative performance of different control options. In order to evaluate control strategies and analyze control problems, research efforts at Lawrence Berkeley Laboratory (LBL) have been focused in two directions: detailed computer modeling of subsystems, such as the collector loop and the building thermostat response, to gain insight into details of system operation; and simulation of active solar heating systems using actual equipment in a way that allows effects such as thermal lags, transit delays and storage stratification to be examined under controlled and reproducible conditions.

Computer simulations have the advantage that numerous comparisons can be made within a short period of time and with minimal cost. Using identical inputs comparisons of different strategies indicate how controller operation varies with set points, use of timers, meteorological conditions and flow rates.

By considering a collector as a series of stirred tanks a computer model is obtained that describes the dynamic effects of collector capacitance and is straightforward to solve. Modeling, however, has certain limitations. The dynamic computer model requires short time steps, is relatively expensive to run for long periods, and does not consider total system performance from solar collection through delivery to the load. Complete system models, such as TRNSYS[1], assume that the system conditions change relatively slowly during the day. While adequate for estimating annual performance complete system models are insensitive to the details required for control strategy evaluation.

Thus experimental data from a test facility are also necessary for comparison of control strategies: to include the effects of a storage system and a load loop; to evaluate the strategies on an actual system which would include the effects of piping delays, sensor location, and storage stratification; and to allow comparisons of control strategies based on system configuration and size, load demand, and meteorological conditions.

In this paper we shall discuss the assumptions made in the two evaluation techniques and present our preliminary conclusions. Proportional and on/off control are initially investigated because they are the most common control strategies and because their rela-relative merits remain controversial [2,3,4,5,6].

DYNAMIC FLAT-PLATE COLLECTOR MODELING

The Model

The Hottel-Whillier-Bliss collector model [7], as adapted by Klein [8] to include the effects of capacitance, is used to describe the operation of a flat-plate solar collector. The model is based upon a heat balance on a collector tube and fluid element, where the entire capacitance of the collector is lumped within the tubes and circulating fluid. The heat balance is solved using numerical methods to describe the circulating fluid's temperature as a function of time and space.

The transient heat balance for a collector element of width W_c is:

$$\begin{aligned} \partial T_{f,x}/\partial t = \gamma \Big[& (F'/C_A)[S - U_L(T_{f,x} - T_a)] \\ & - (\dot{m}c_p/C_A W_C)(\partial T_{f,x}/\partial x) \Big] \\ & + (1-\gamma)\Big[(F'/C_A)[S - U_L(T_{f,x} - T_a]\Big] \end{aligned} \qquad (1)$$

C_A is the weighted average of the fluid and collector capacitance for a non-drain down collector. For a drain down system a two lump model is required since the collector and fluid capacitance would have to be treated separately.

The spatial derivative is eliminated by breaking the collector into a number of nodes (stirred tanks). The time dependent temperature of the Nth node is written:

$$\begin{aligned} dT_N/dt = \gamma \Big[& (F'/C_A)[S - U_L(T_{f_N} - T_a)] \\ & + (\dot{m}c_p/C_A W_c \Delta x)(T_{f_{N-1}} - T_{f_N}) \Big] \\ & + (1-\gamma)\Big[(F'/C_A)[S - U_L(T_{f_N} - T_a)]\Big] \end{aligned} \qquad (2)$$

This equation was solved using the Parasol program [9] which solves differential equations through the use of the fourth-order Runge-Kutta method. The Parasol program's output is the fluid temperature at different positions and for discrete time intervals.

The model described by equation 2 is adopted for the following reasons:

1) It provides an adequate description of the transient temperature distribution in a collector's circulating fluid.

2) It includes collector capacitance effects.

3) It is derived from a well established and respected collector model.

4) It provides results that are usable and consistent with known collector operation.

Collector Parameters For Modeling

To compare various control strategies using a computer model, appropriate parameters must be used which represent a typical flat-plate collector under the influence of common external conditions. Parameter variations should be kept to a minimum so that results are easy to interpret and clearly indicate the effects of important variables.

Although a multi-node model is used for the simulations, the single node model is used to define the parameters. These parameters are then scaled for use in a multi-node model. In the limiting case of a single node collector model, for flow conditions, equation 2 can be written to demonstrate the functional dependence of the collector temperature on 1) insolation and ambient temperature, 2) fluid flow rate, 3) fluid inlet temperature and, 4) collector characteristics:

$$C_A dT_{out}/dt = (K_{gain})f(t) + (K_{flow})T_{in} - (K'_{flow})T_{out}$$

Where:

K_{gain} represents the collector's gain from insolation and losses to the environment

$$K_{gain} = F'[S_{max} + U_L T_{a,max}]$$

$f(t)$ represents the time variation of the normalized forcing function due to insolation and ambient temperature

K_{flow} represents the fluid flow rate per unit area

$$K_{flow} = \dot{m}c_p/A_c$$

$$K'_{flow} = \dot{m}c_p/A_c + F'U_L \text{ ; since, } F'U_L << c_p/A_c$$

K_{flow} approximately equals K'_{flow}

C_A represents the collector/fluid capacitance per unit area

By allowing K_{gain} and K_{flow} (and K'_{flow}) to take on either HIGH or LOW values while keeping all other parameters constant, the various control strategy comparisons are based on a limited but comprehensive set of collector, meteorological, and flow variations which define limits of operation for a typical collector. Numerical values for the parameters are summarized in Table I.

For comparison of control strategies, the collector inlet temperature, T_{in}, is assumed to be constant. The solar day for all runs is 12 hours long with a peak insolation rate reached at hour 6. For modeling of a clear day (no interruptions of insolation) the insolation rate, I, is proportional to a sine wave with a 24 hour period. For a cloudy day (the view of the collector intermittently interrupted) the following equation, used by Close[10], determines the insolation rate as a function of time, t, in hours:

$$I = (I_{max}/2)[\sin \pi t/12)][\cos(40\ \pi t/12) + 1]$$

The ambient temperature, T_a, is proportional to a sine wave with a 24 hour period, the peak value is at the 9th hour of the solar day:

$$T_a = TO + TM * \sin(\pi t/12 - \pi/4)$$

Collector Flow Controllers

Solar energy collection is controlled by fluid flow through the collector loop. Collector outlet and storage tank temperatures are compared by a controller to determine the fluid flow rate. The difference between the collector outlet temperature and the storage tank temperature, ΔT, represents the temperature rise across the collector.

On/Off Flow Control. The on/off controller is a thermostat which turns the fluid circulation pump either on or off based on the temperature difference between storage and the collector, ΔT. The flow rate through the collector is a function of the temperature difference and its previous state. ΔT_{on} is the minimum temperature difference required to turn on the collector loop pump. The pump stays on until the temperature difference falls below ΔT_{off}. The region between set points ΔT_{on} and ΔT_{off} is known as the hysteresis zone and holds the pump on until the lower temperature limit is reached. Because of hysteresis on/off controllers have "memory" which limits pump cycling.

Proportional Flow Control (with saturation). In this type of feedback controller the fluid flow rate is varied as a function of the temperature rise across the collector, ΔT. The advantages of a proportionally controlled collector system are that fluid flow is initiated at lower values of ΔT and pump cycling is minimized. The fluid flow rate through the collector is given by:

$$\dot{m}(t) = \begin{cases} 0 & \text{for } \Delta T < \Delta T_{off} \\ K\Delta T & \text{for } \Delta T_{off} \leq \Delta T \leq \Delta T_{max} \\ \dot{m}_c & \text{for } \Delta T \geq \Delta T_{max} \end{cases}$$

Where:

$\dot{m}_c$ is the maximum flow rate;

ΔT_{max} is the temperature rise across collector at which flow rate saturates to its maximum;

K is the proportional flow constant equal to ratio of the maximum flow rate to the temperature difference required for maximum flow, $K = \dot{m}_c/\Delta T_{max}$; and

ΔT_{off} is the the temperature rise across the collector sufficient to turn off the pump or the minimum temperature rise across the collector for which it is possible and/or profitable to turn on the pump.

Controller and Set Point Comparisons

Controllers are compared on the basis of their performance with respect to: collection efficiency, maximum steady-state efficiency, pump running time and pump cycling. Collection efficiencies are compared to a maximum steady-state efficiency which is the ratio of the energy collected by a panel with an infinite flow rate to the total energy incident on the panel. This provides a basis of comparison for judging how close a particular strategy approaches the ideal. The run time for a given strategy is used together with knowledge of pumping power requirements to estimate parasitic power consumption. The pump cycling rate is an indication of system stability.

These comparisons are the result of digital computer simulations using a time step of 0.001 hours for high flow rates and 0.002 hours for low flow rates. The model is implemented on a PDP 11/60 computer.

The set points compared (see Table II) represent upper and lower limits of values used in industry and research. With the 'perfect' timer modeled the collector pump turns on in the morning and stays on until there is no more energy to collect. This eliminates all pump cycling and is equivalent to setting ΔT_{off} equal to zero. Timers were modeled for clear day cases only since their operation is highly dependent on insolation pattern and timer delay.

Table II presents the collection efficiencies, pump running times and amount of cycling for the different control strategies under the assigned conditions. While these results have been discussed in detail elsewhere[11], the main conclusions follow.

On/Off vs Proportional. Typical simulation results for a clear, high gain day are shown in Fig. 1 and for a cloudy, low gain day in Fig. 2. For clear days the collection efficiency for all of the controllers is approximately equal and close to the maximum theoretical steady-state efficiency. On/off controllers, in general, did slightly better than proportional controllers and on/off controllers with timers achieve the best efficiency since they run the pumps for the longest amount of time. It is doubtful that any other type of controller could do better under similar conditions.

During periods of interrupted insolation neither proportional nor on/off controllers respond well to rapid changes in the insolation rate and the collection efficiency can fall well below the maximum possible. However, because the proportional controller is more sensitive to changes in insolation and ambient temperature, proportionally-controlled systems collect somewhat more energy during such periods. This sensitivity also causes the proportional controller to maintain a lower average flow rate and thus operate the collector at higher temperatures. While decreasing instantaneous collection efficiency, this may improve storage stratification and overall system performance.

Upper Set Point. The on set point, ΔT_{on}, for an on/off controller can have a minimal effect on energy collection, as long as it is not so high that the collector pump does not come on until late in the morning. This is because of the collector's capacitance which allows the collector to store energy when the fluid is not circulating and because the off set point actually determines when the pump will stay on. The fact that the collector acts as a storage device also leads to the result that low to moderate cycling of the pump has a minimal effect on energy collection. The effects of collector capacitance are important and cannot be considered in steady-state analysis.

The proportional controller set point for maximum flow can also have a minimal effect on energy collection. However, if the point is very high the flow rate will never reach maximum, causing increased losses to the ambient. Also if the set point is very low, the proportional controller's sensitivity will be lost and the controller will act as a bang-bang controller.

Off Set Point. The off set point has a direct effect on energy collection since it determines not only the amount of cycling, but also how long the collector loop pump stays on. As indicated in Fig. 1 the on/off controller with a perfect timer (equivalent to $\Delta T_{off} = 0$) gives improved energy collection. Thus, the off set point should be set as low as possible to maximize collection time. However, the set point must be high enough so that; the value of energy collected always exceeds the cost of parasitic pumping power, the energy collected is greater than that lost in the piping, and the point selected is within the error tolerances of the sensor used.

Parasitic power required to run a circulating pump does not appear to be significant for either on/off or proportional controllers unless a large pump (or fan) motor is required, such as in a large drain down or air system. Piping temperature drops for typical pipe runs and fluid flow rates are shown in Fig. 3 for different pipe inlet - ambient temperature differences. As can be seen in the figure the temperature drop in the outdoor piping of most systems is only about 1°C even for the extreme inlet - ambient temperature difference of 100°C. Thus, for systems with properly insulated piping, the limiting requirement for determining ΔT_{off} is usually temperature sensor sensitivity. Similar results concerning the relative importance of upper and lower set points have been reported elsewhere[12].

TEST FACILITY

The performance of any solar heating system depends on the meteorological conditions present and the load on the structure to be heated. To compare control strategies either identical systems must be built and operated side-by-side, or elaborate analysis of the observations are required to sort out the effects of the control strategy. Consequently little experimental data evaluating control strategies is available, even though experimental tests are necessary to demonstrate effects that have not been modeled in detail.

As a solution to this problem an experimental facility was developed at LBL to analyse control problems using actual equipment that reflects both the short term response of control functions, and the overall system response. The facility is used to compare alternative control strategies in a controlled laboratory environment where accurate and repeatable observations can be made. To allow repeated runs under identical external conditions, and thus to make meaningful comparisons, the solar energy input to the system and the building energy load are simulated. With the apparent temperature of the collector output and

the demand thermostat condition simulated for the controller, performance comparisons are based on identical load and meteorological conditions.

The experimental solar energy system consists of a collector loop with a solar heat input simulator, a 3000 gallon storage tank, a load loop air duct with fan coil, an auxiliary heat source and associated pumps and valves. A schematic of the system is shown in Fig. 4. The system is sized to represent a hydronic solar heating system in a typical residence. The operation of the solar energy system is controlled by a PROM (programmable read-only memory) controller, developed at LBL, that uses building thermostat signals and temperature sensor comparisons to address a truth table containing the control algorithms. The facility has been described previously[13].

Solar Input Simulator

The solar input simulator, the pseudo-collector, is a boiler with a proportionally controlled mixing valve that allows adjustment of the input-output temperature difference. Values of solar insolation and ambient temperature (read from TMY tapes), pseudo-collector inlet temperature and flow rate, along with typical collector parameters are used to determine the correct temperature difference.

The control of the entire solar energy system is under the direction of the PROM controller. The controller monitors temperatures of various sensors and generates relay outputs to control system actuators (pumps, fans, etc.). When the collector loop is operating the expected inlet-outlet temperature difference is calculated using the Hottel-Whillier-Bliss steady-state model. An electrical signal representing the collector output sensor is set to the expected collector output temperature. As long as this apparent output temperature is greater than the off set point the collector loop continues to operate. If the apparent collector outlet temperature falls below the off set point then the controller turns off the collector loop pump.

If the collector loop is not flowing the stagnation temperature is calculated using the steady state model adapted to include thermal delays associated with collector capacitance. Again an electrical signal is generated to represent the apparent collector temperature. The apparent collector temperature and boiler control are updated every 60 seconds. Thus the pseudo-collector system simulates the heat input from the collector array and generates electrical signals representing the collector temperature for the system controller.

Figure 5 shows the inlet temperature and the calculated and observed pseudo-collector outlet temperature over a four hour period of increasing and decreasing insolation. If the collector outlet temperature under flow conditions is less than the off temperature and the collector stagnation temperature is greater than the on temperature, then the collector loop pump will cycle on and off and the collector temperature will cycle between the "on" and "off" temperatures. Such cycling is typical of solar collector systems. Thus the pseudo-collector system can accurately simulate the output of a collector model based on input weather and insolation data.

Load Simulator

The load simulator, which duplicates a building's heating system, consists of a return air duct, fan, and heating and cooling coils. The duct inlet air temperature is adjusted to simulate the building return air temperature by an electric resistance heater and an air-conditioner. The building heating requirements are based on building loads calculated using TRNSYS, standard residential structures specified for four cities, and typical meteorological year insolation and weather data[14]. A simple thermostat model is used to control the heat delivery system. As determined by McBride[15] in experimental studies, the heat delivery system is on for a fixed interval of about 5 minutes. The energy delivered to the load by the heating coil is measured and compared with the building load to determine how often heat must be supplied and whether auxiliary energy is required.

Initial Experiments

Initial experiments have been completed on the test facility to determine the accuracy of energy balance measurements for the system. The building load and collector array size represent a typical residence in Madison, Wisconsin. Energy balances are performed during the experiment by: 1) determining the energy delivered by the pseudo-collector; 2) determining the energy stored at the beginning and end of a period; 3) determining the source and amount of energy delivered to the load; 4) determining the amount of parasitic energy used; and 5) estimating losses from storage and piping.

Comparison tests of alternative control strategies have begun. The facility is run for a series of days using typical meteorological data for Madison, Wisconsin. On/off and proportional control strategies are being tested presently.

DISCUSSION

Comparison of Control Strategies

Computer simulation work to date indicates that improvements in energy collection can be obtained by 'fine tuning' set points to the climate and system involved. For while the upper set points are not always critical in determining energy collection, off set points usually are. Results also indicate that neither on/off nor proportional control performs best for all conditions. Whether on/off or proportional control should be implemented is dependent on weather conditions and system characteristics, such as flow rate.

Evaluation Techniques

There are several implications of this study for the design and evaluation of control strategies. First, the difference between a steady-state and a dynamic analysis of control strategies is significant. Future work in modeling control systems must consider collector capacitance in order to accurately describe the transient response of the fluid temperature. The need for experimental comparisons which include effects that are impractical or impossible to model is satisfied by the LBL test facility. The facility allows repeated tests using identical solar inputs and building load demands while incorporating effects such as storage stratification and thermal delays related

to piping and sensors.

Both computer modeling and experimental system evaluations are necessary for analysing the performance of control strategies for active solar systems. By using the two techniques discussed results can be developed which will indicate how different control strategies actually perform and under what conditions each will perform best.

ACKNOWLEDGEMENTS

This work has been supported by the Active Building Systems Division, Systems Development Branch, Office of Solar Applications for Buildings, U.S. Department of Energy under Contract W-7405-ENG-48.

REFERENCES

1 Klein, S.A., et al., "TRNSYS - A Transient Simulation Program, Version 10.1," prepared by the Solar Energy Laboratory, Univ. of Wisconsin - Madison.

2 Lewis, R. and Carr, J., "Comparative Study on ON/OFF and Proportionally Controlled Systems," Proceedings of the Workshop on the Control of Solar Energy Systems for Heating and Cooling of Buildings, U.S. Department of Energy, 1978.

3 Schlesinger, R.J., "Field Test Data on a Comparison Between Proportional and ON/Off Differential Thermostats," Proceedings of the Workshop on the Control of Solar Energy Systems for Heating and Cooling of Buildings, U.S. Department of Energy, 1978.

4 Pejsa, J.H., "Cost-Effective Control Systems for Solar Heating and Cooling Applications, Final Report," Sept. 1978., Honeywell Energy Resources Center, Minneapolis.

5 Swanson, T.D., et. al., "Study on the Application of NASA Energy Management Techniques For Control of Terrestrial Solar Water Heating System." Proceedings of the AIAA Terrestrial Energy Systems Conference, June 4-6, 1979.

6 Baer, Craig, et. al., "Enhancement of Performance of Active Solar Systems by Optimal Control and System Identification Techniques." Proceedings of the Systems Simulation and Economic Analysis Conference, Department of Energy, January 23-25, 1980.

7 Duffie, J.A. and Beckman, W.A. Solar Energy Thermal Processes, Wiley-Interscience Publications, New York, 1974, Chap. 7.

8 Klein, S.A., Duffie, J.A. and Beckman, W.A. "Transient Considerations of Flat-Plate Solar Collectors," ASME Journal of Engineering Power, 96A (1974).

9 Auslander, D.M. "A Continuous System Simulation Language Designed for LSI Economics" Mathematics and Computers in Simulation, Vol. 20, 1978, pp. 308-313.

10 Close, D.J. "A Design Approach For Solar Processes." Solar Energy, Vol. 11, No. 2, 1967, pp. 112-122.

11 Schiller, S.R., et al., "Comparison of Proportional and On/Off Solar Collector Loop Control Strategies Using a Dynamic Collector Model," LBL Report #10315 (December, 1979). Accepted for Publication in the ASME Journal of Solar Energy Engineering.

12 P.R. Herczfeld, et. al., "Solar Flat Plate Collector Control System Sensitivity Analysis," Proceedings of the Systems Simulation and Economic Analysis Conference, Department of Energy, January 23-25, 1980.

13 Warren, M.L., et al., "Experimental Test Facility For Evaluation of Controls and Control Strategies," Proceedings of Second Annual System Simulation and Economic Analysis Conference, Department of Energy, January 23-25, 1980.

14 Leboeuf, Cecile, "Standard Assumptions and Methods for Solar Heating and Cooling Systems Analyses," SERI TR-402, 17 September 1979.

15 McBride, Merle F., "Measurement of Residential Thermostat Dynamics for Predicting Transient Performance," ASHRAE Transactions, 85, 1979, PH-79-7A.

TABLE I: SUMMARY OF COLLECTOR PARAMETERS FOR COMPUTER SIMULATIONS

CAPACITANCE, C_A	COLLECTOR LOSS COEFFICIENT, U_L
.7 BTU/ft^2-^{o}F	.7 BTU/ft^2-hr-^{o}F
14.3 kJ/m^2-^{o}C	3.97 watts/m^2-^{o}C
TRANSMITTANCE/ ABSORPTANCE, $\tau\alpha$	FIN EFFICIENCY, F'
0.84	.95 (Flow)
	1.0 (No Flow)
TEMPERATURE (MAXIMUM), $T_{a(max)}$	INSOLATION MAXIMUM, I_{max}
70°F 21.1^{o}C High Gain	300 BTU/ft^2-hr 946 watts/m^2 High Gain
50°F 10°C Low Gain	150 BTU/ft^2-hr 473 watts/m^2 Low Gain
FLOW RATES (MAXIMUM), $\dot{m}c_p/A_c$	INLET FLUID TEMPERATURE, T_{in}
25 BTU/ft^2-hr-^{o}F 511 kJ/m^2-hr-^{o}C High Flow	115°F 46.1^{o}C
15 BTU/ft^2-hr-^{o}F 306 kJ/m^2-hr-^{o}C Low Flow	

TABLE II: CONTROLLER STRATEGY COMPARISONS 12 HOUR TOTALS

CONTROL STRATEGY		HIGH GAIN[a] HIGH FLOW[b] CLEAR DAY	HIGH GAIN LOW FLOW[c] CLEAR DAY	LOW GAIN[d] HIGH FLOW CLEAR DAY	LOW GAIN LOW FLOW CLEAR DAY	HIGH GAIN HIGH FLOW CLOUDY DAY[e]	HIGH GAIN LOW FLOW CLOUDY DAY	LOW GAIN HIGH FLOW CLOUDY DAY	LOW GAIN LOW FLOW CLOUDY DAY
Maximum Steady-State Efficiency(%)		65.7	65.7	39.5	39.5	56.1	56.1	26.5	26.5
ON/OFF On=9°F (5°C) Off=3°F(1.7°C)	efficiency(%)	60.3	59.6	35.0	34.9	45.2	45.2	8.6	8.5
	pumping time(hours)	8.72	9.27	2.76	5.98	3.34	3.83	.311	.496
	times cycled	10	2	61	10	14	12	4	10
ON/OFF On=21°F(11.7°C) Off=3°F(1.7°C)	efficiency(%)	59.7	59.1	31.9	33.9	44.1	44.2	5.2	5.4
	pumping time(hours)	8.39	8.98	1.39	5.44	2.47	2.92	0.095	0.16
	times cycled	6	2	22	6	12	18	2	2
ON/OFF With perfect timer On=9°F 5°C	efficiency(%)	60.5	59.9	35.7	35.3	--	--	--	--
	pumping time (hours)	9.87	9.88	7.68	7.69	--	--	--	--
	times cycled	0	0	0	0	--	--	--	--
ON/OFF With perfect timer On=21°F 11.7°C	efficiency(%)	60.4	59.8	35.5	35.1	--	--	--	--
	pumping time(hours)	9.71	9.72	7.38	7.39	--	--	--	--
	times cycled	0	0	0	0	--	--	--	--
PROPORTIONAL Full On=9°F 5°C Off = 3°F 1.7°C	efficiency(%)	60.2	59.7	35.0	34.7	45.4	45.0	9.6	9.5
	pumping time (equiv. hours)	7.54	8.85	3.58	4.63	3.20	4.03	0.52	0.72
	times cycled	0	0	0	0	0	0	0	0
PROPORTIONAL Full On=21°F 11.7°C Off = 3°F 1.7°C	efficiency(%)	59.6	59.0	34.4	33.9	44.8	44.3	9.4	9.1
	pumping time (equiv. hours)	4.92	6.33	2.34	3.01	2.16	2.84	0.38	0.51
	times cycled	0	0	0	0	0	0	0	0

a) high gain: insolation = 2292 BTU/ft^2-day, 7224 watt-hrs/m^2-day; ambient temp. = 44.4° - 70°F, 6.89° - 21.1°C

b) high flow = 25 lbm/hr-ft^2, 122 kg/hr-m^2

c) low flow = 15 lbm/hr-ft^2, 73.2 kg/hr-m^2

d) low gain: insolation=1146 BTU/ft^2-day, 3612 watt-hrs/m^2-day; ambient temp.= 32.9° - 50°F, .5° - 10°C

inlet temperature = 115°F, 46.1°C

collector capacitance = .7 BTU/ft^2-°F, 14.3 kJ/m^2-°C

collector loss coefficient = .7 BTU/ft^2-hr-°F, 3.97 watts/m^2-°C

e) for cloudy day cases, the total insolation is half of the clear day values given in (a) and (d)

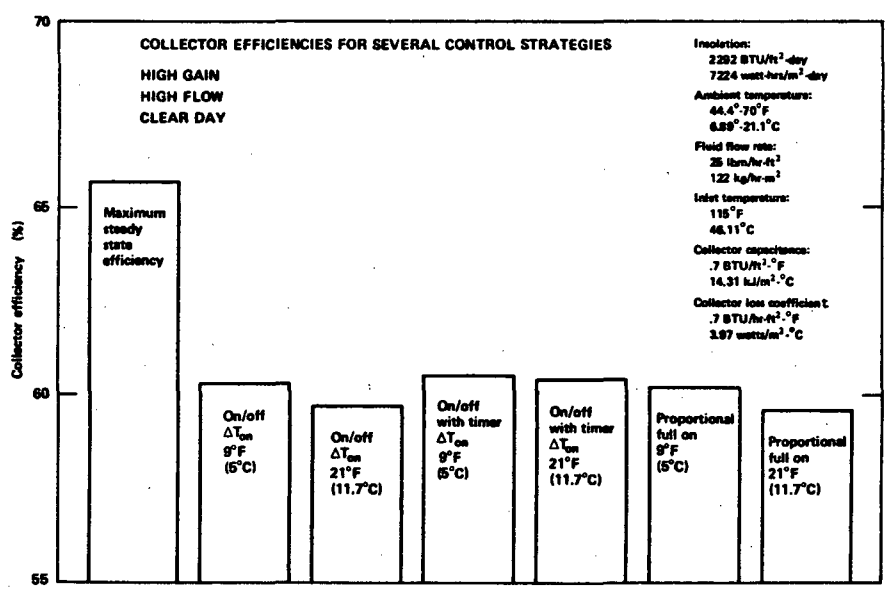

FIG. 1: Collector Efficiencies: High Gain, Clear Day

XBL 796-1884

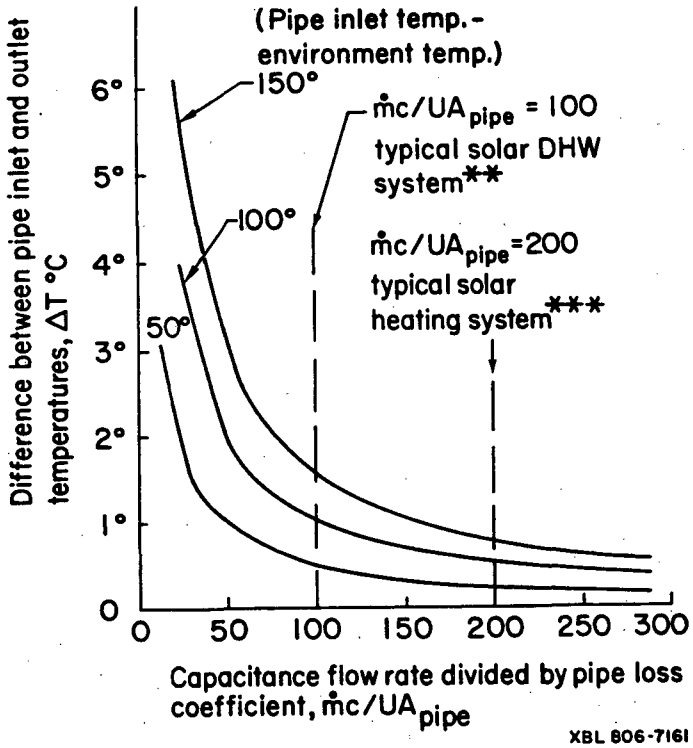

FIG. 3: Temperature Loss In Pipes*

* Temperature loss in pipes is based on:

$$\dot{m}c\,(T_{in} - T_{out}) = UA[(T_{in} + T_{out})/2 - T_a]$$

** Typical domestic hot water system:

$A_c = 5\ m^2$ $\dot{m}c = 90$ watts/m^2 - °C

$U_{pipe} = .6$ watts/m - °C Length$_{pipe}$ = 7.5 m

*** Typical heating system:

$A_c = 50\ m^2$ $\dot{m}c = 90$ watts/m^2 - °C

$U_{pipe} = .6$ watts/m - °C Length$_{pipe}$=37.5m

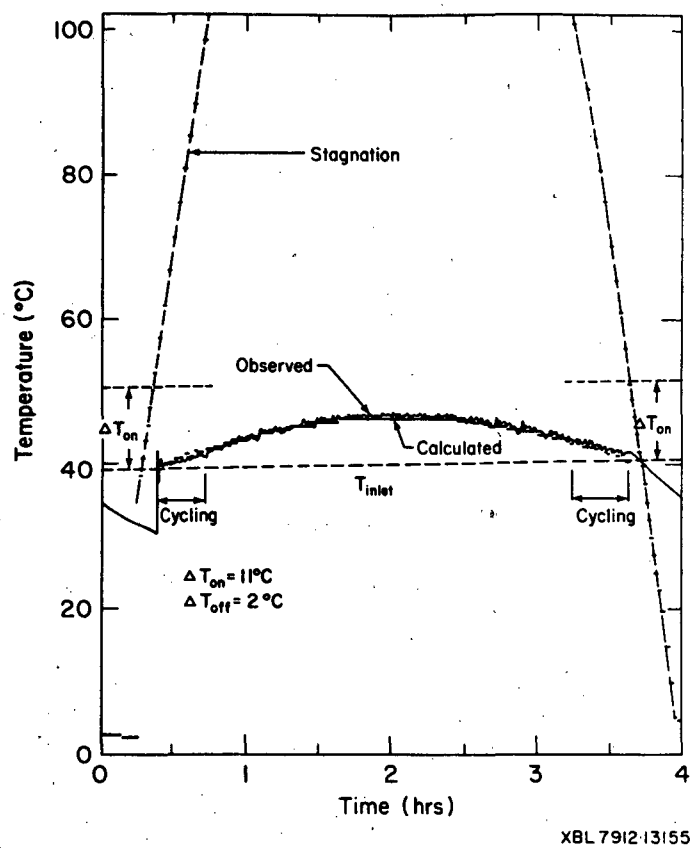

FIG. 5: Pseudo-collector output. Calculated temperature (no flow), calculated outlet temperature (flow), and observed pseudo-collector outlet temperature.

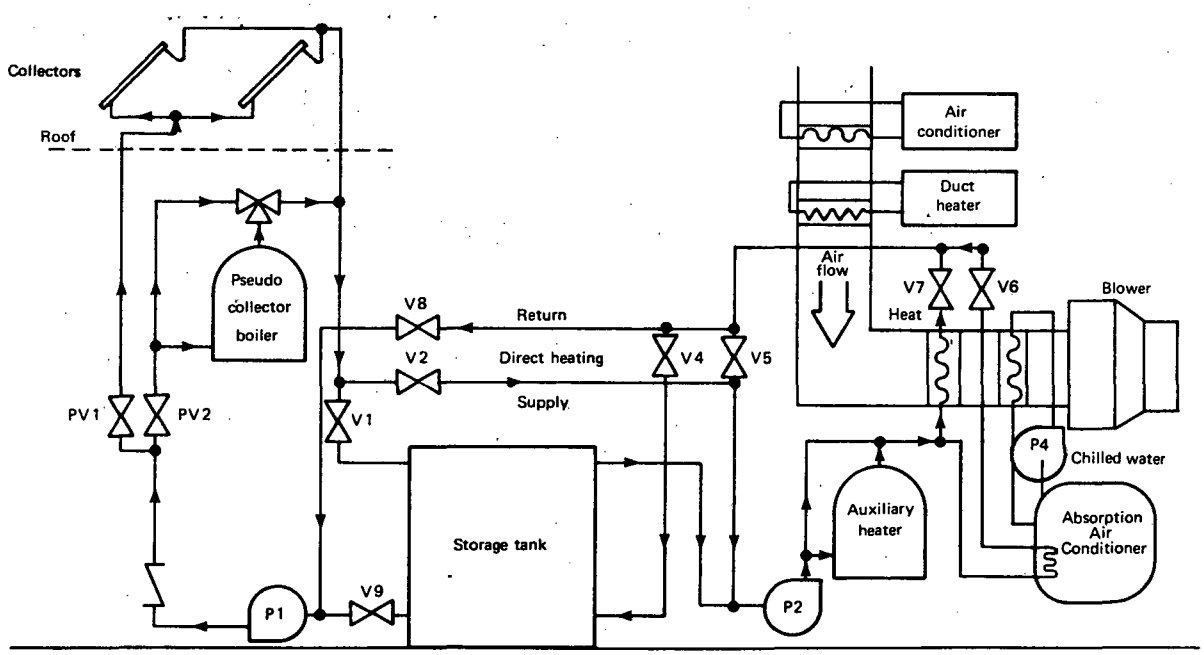

FIG. 4: Test Facility For Solar Heating and Cooling Controls

This report was done with support from the Department of Energy. Any conclusions or opinions expressed in this report represent solely those of the author(s) and not necessarily those of The Regents of the University of California, the Lawrence Berkeley Laboratory or the Department of Energy.

Reference to a company or product name does not imply approval or recommendation of the product by the University of California or the U.S. Department of Energy to the exclusion of others that may be suitable.

TECHNICAL INFORMATION DEPARTMENT
LAWRENCE BERKELEY LABORATORY
UNIVERSITY OF CALIFORNIA
BERKELEY, CALIFORNIA 94720