LBL-10925 C.2
Preprint

Lawrence Berkeley Laboratory

UNIVERSITY OF CALIFORNIA

ENERGY & ENVIRONMENT DIVISION

Submitted to Biotechnology and Bioengineering

ENERGY REQUIREMENTS FOR THE VACU-FERM PROCESS

RECEIVED
LAWRENCE
BERKELEY LABORATORY

JUL 25 1980

LIBRARY AND
DOCUMENTS SECTION

Brian Maiorella and Charles R. Wilke

May 1980

TWO-WEEK LOAN COPY

This is a Library Circulating Copy which may be borrowed for two weeks. For a personal retention copy, call Tech. Info. Division, Ext. 6782.

LBL-10925 C.2

Prepared for the U.S. Department of Energy under Contract W-7405-ENG-48

DISCLAIMER

This document was prepared as an account of work sponsored by the United States Government. While this document is believed to contain correct information, neither the United States Government nor any agency thereof, nor the Regents of the University of California, nor any of their employees, makes any warranty, express or implied, or assumes any legal responsibility for the accuracy, completeness, or usefulness of any information, apparatus, product, or process disclosed, or represents that its use would not infringe privately owned rights. Reference herein to any specific commercial product, process, or service by its trade name, trademark, manufacturer, or otherwise, does not necessarily constitute or imply its endorsement, recommendation, or favoring by the United States Government or any agency thereof, or the Regents of the University of California. The views and opinions of authors expressed herein do not necessarily state or reflect those of the United States Government or any agency thereof or the Regents of the University of California.

ENERGY REQUIREMENTS FOR THE VACU-FERM PROCESS

Brian Maiorella
Charles R. Wilke
Department of Chemical Engineering
and
Lawrence Berkeley Laboratory
University of California
Berkeley, California 94720

By minimizing product inhibition, vacuum fermentation is effective in reducing equipment size and cost for rapid ethanol production. However, a recent paper by Ghose and Tyagi describes the process as too energy intensive to be practical. This objection is shown to be unfounded. Energy requirements for vacuum operation are comparable to those for conventional processes when suitable techniques for energy recovery are employed.

Vacu-ferm is an important new process for rapid fermentative production of alcohol fuel. In a recent article (1), Ghose and Tyagi state that vacuum fermentation is an effective way to remove end product inhibition and thus greatly increase ethanol productivity. Ghose and Tyagi then go on to discount this process for industrial application, citing very high energy requirements for the vacuum compressors. This overlooks, however, the work of Cysewski and Wilke (2), who have shown that energy requirements for rapid production of azeotropic ethanol using vacu-ferm need not be high.

The traditional batch process for azeotropic ethanol production is shown schematically in figure 1. A plant size of 25 million gallons of azeotropic alcohol per year is used. Fourteen 100,000 gallon batch reactors, each with an average productivity of 1.8 $\frac{\text{gm ethanol}}{\text{l. hr.}}$ (3) (including 6 hour down time between cycles) are operated to feed the continuous distillation system. The

total energy requirement for fermentation distillation and yeast recovery from a 10 wt% glucose feed is 28,530 Btu/gallon (in close agreement with the energy requirement which Ghose and Tyagi assigned to this process is their analysis).

In the continuous vacu-ferm process, the fermentor is operated at low pressure (51 mmHg) so that ethanol is boiled away as it is formed. With fermentor beer ethanol concentration maintained at 3.5 wt% or less, end product inhibition is removed. Products are taken overhead as vapors rather than leaving in a dilute stream which would also carry away yeast cells. The yeast cell concentration builds up to high levels. Very high sugar concentration feeds can be fermented, and productivity is increased forty-fold to 80 $\frac{\text{gm ethanol}}{\text{l. hr.}}$.

The process flows for a 25 million gallon per year vacu-ferm plant are shown in figure 2. 30 wt% glucose solution (diluted from high test molasses) is fed continuously to a single 40,000 gallon fermentor. Fermentation occurs. The beer boils at low pressure and an equilibrium mixture of ethanol and water plus all carbon dioxide produced is taken overhead. A 3050 HP compressor removes these vapors, thus maintaining the desired vacuum.

To reduce energy requirements, vapor recompression heating is used. Rather than compressing the vapor mixture entirely to atmospheric pressure, the main compressor compresses the vapor to only 118 mmHg. At this pressure, the vapors can be passed through a coil in the fermentor and heat will be exchanged, both condensing the ethanol and water vapors and providing heat for boil up in the fermentor. The liquid ethanol water mixture can now be pumped at low energy cost to atmospheric pressure while a second compressor is required to remove the carbon dioxide gas from this system.

Added energy requirements for the two compressors amount to 4,500 Btu/gallon of product. However, the fermentor flashing operation provides a first

concentration step yielding a relatively concentrated (17 wt%) ethanol feed for the final distillation. Less water must be handled in the main distillation column and distillation energy savings thus result. The overall energy requirement for production of azeotropic ethanol by the vacu-ferm process is 30,020 Btu per gallon (not the 29-fold increase in energy requirement claimed by Ghose and Tyagi).

If a dilute hydrolyzate sugar solution is used, concentration to 30 wt% sugar is necessary to gain all the advantages of the vacu-ferm process, but this concentration can be accomplished at reasonable energy cost by applying multi-effect evaporation and then using the steam from the final effect to drive the distillation.

The continuous vacu-ferm process, by greatly increasing ethanol productivity and thus reducing equipment size and capital cost, offers promise of making possible production of low cost ethanol fuel. Energy requirements for this process are only slightly larger than those for conventional processes and should not be considered a drawback. Other important technical difficulties -- the need to meet oxygen maintenance requirements and to maintain long term asceptic operation under vacuum -- must be overcome in industrial application.

Acknowledgement

This work was supported by the U.S. Department of Energy under contract W-7405-ENG-48.

References

1. T.K. Ghose and R.D. Tyagi, "Rapid Ethanol Fermentation of Cellulose Hydrolysate. I. Batch Versus Continuous Systems." Biotechnology and Bioengineering, Vol. XXI, pp. 1387-1400 (1978).

2. G.R. Cysewski and C.R. Wilke, "Process Design and Economic Studies of Alternative Fermentation Methods for the Production of Ethanol," Biotechnology and Bioengineering, Vol. XX, pp. 1421-1444 (1978).

3. W.L. Jacobs, "Industrial Alcohol," Miscellaneous Publications No. 695, U.S. Department of Agricultural, February 1950.

4. S. Aiba, M. Shoda and M. Nagatani, "Kinetics of Product Inhibition in Alcohol Fermentation," Biotechnology and Bioengineering, Vol. X, 845 (1968).

5. G. Cysewski and C.R. Wilke, "Rapid Ethanol Fermentations Using Vacuum and Cell Recycle." Biotechnology and Bioengineering, Vol. XIX, pp. 1125-1143 (1977).

Figure 1 BATCH ETHANOL FERMENTATION PLANT
25,000,000 gallons/year capacity

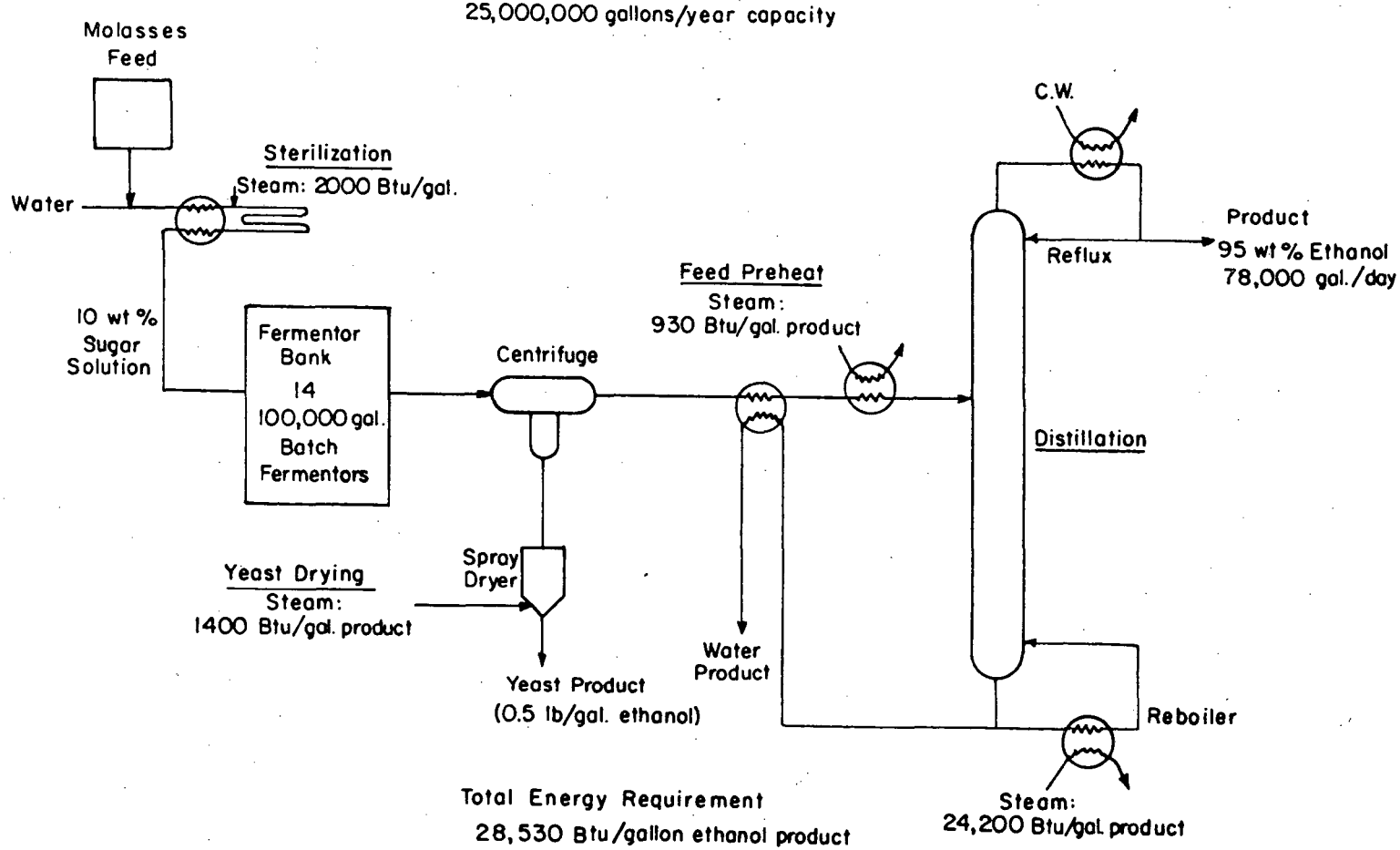

XBL 801-4592

Figure 2 VACUFERM FERMENTATION PROCESS

25,000,000 gallon/year capacity

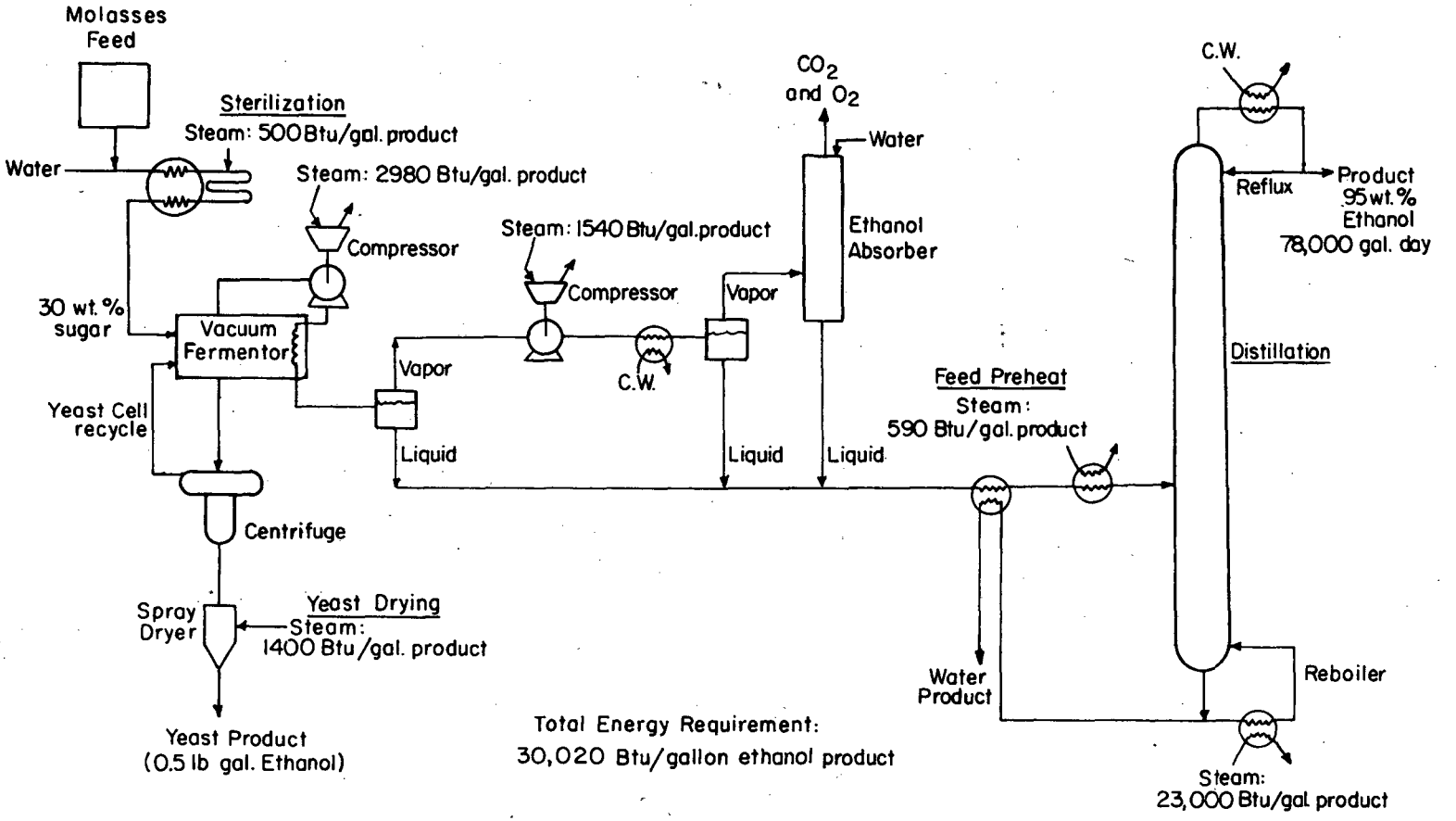

XBL 801—4593

This report was done with support from the Department of Energy. Any conclusions or opinions expressed in this report represent solely those of the author(s) and not necessarily those of The Regents of the University of California, the Lawrence Berkeley Laboratory or the Department of Energy.

Reference to a company or product name does not imply approval or recommendation of the product by the University of California or the U.S. Department of Energy to the exclusion of others that may be suitable.

TECHNICAL INFORMATION DEPARTMENT
LAWRENCE BERKELEY LABORATORY
UNIVERSITY OF CALIFORNIA
BERKELEY, CALIFORNIA 94720