LBL-10928 c.2

Lawrence Berkeley Laboratory
UNIVERSITY OF CALIFORNIA

Accelerator & Fusion Research Division

To be presented at the 8th International Cryogenic Engineering Conference, Genoa, Italy, June 3-6, 1980

GRAVITATIONAL CONVECTION OF SUBCOOLED HE I AND THE TRANSITION INTO SUPERFLUID HE II AT ATMOSPHERIC PRESSURE

S. Caspi

June 1980

RECEIVED
LAWRENCE
BERKELEY LABORATORY

JUN 20 1980

LIBRARY AND
DOCUMENTS SECTION

TWO-WEEK LOAN COPY

This is a Library Circulating Copy which may be borrowed for two weeks. For a personal retention copy, call Tech. Info. Division, Ext. 6782.

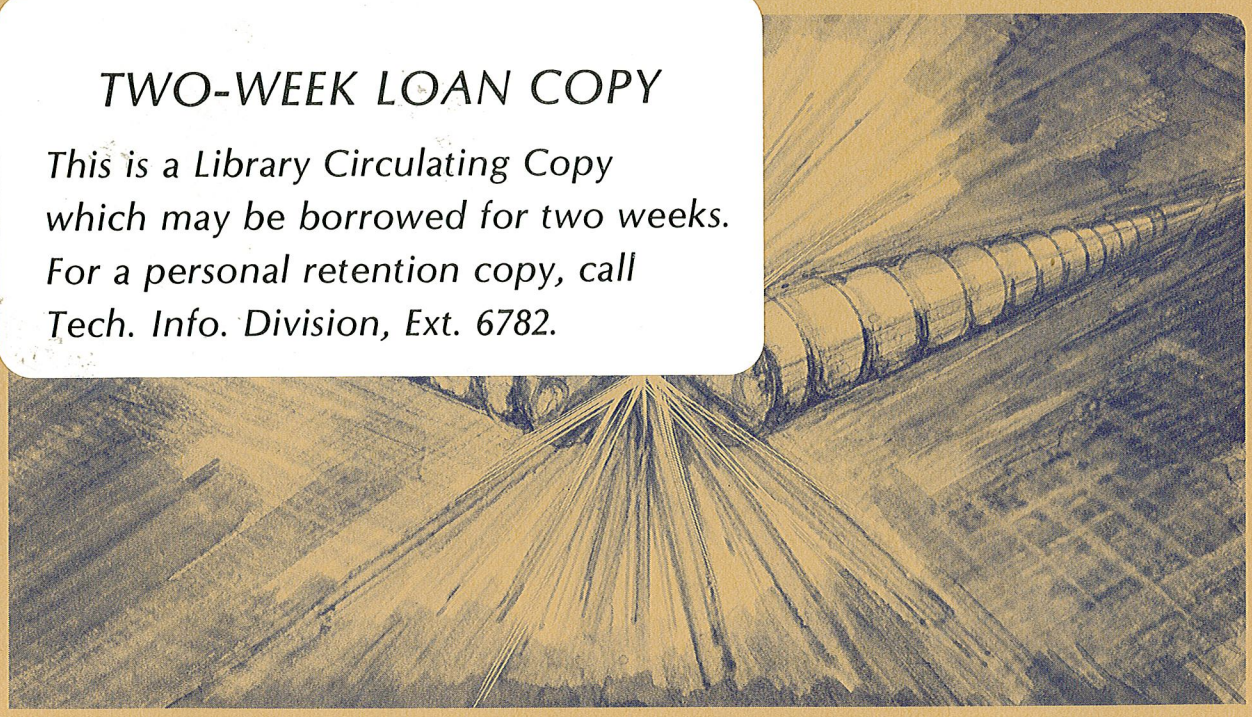

LBL-10928 c.2

Prepared for the U.S. Department of Energy under Contract W-7405-ENG-48

GRAVITATIONAL CONVECTION OF SUBCOOLED HE I AND THE TRANSITION INTO SUPERFLUID HE II AT ATMOSPHERIC PRESSURE

S. Caspi

Accelerator and Fusion Research Division, Lawrence Berkeley Laboratory,
University of California, Berkeley, California 94720, U.S.A.

The propagation velocity of the He II-He I interface at 1 atm was measured in a large experimental cryostat. During cooldown, He II at the lambda temperature propagates up and down in a gravitational field with an interface velocity V_b which depends on the He I temperature T_∞. For T_∞ = 4 K, V_b = 0.1 mm/sec and for T_∞ = 2.2 K, V_b = 2 mm/sec. During warm up, He I propagated with an interface velocity V_b > 30 mm/sec that was measured as low bound only. A mathematical model gives a temperature dependent interface thickness in the range $2 \times 10^{-3} \simeq \delta < 4 \times 10^{-1}$ mm.

DISCLAIMER

INTRODUCTION

The training process of superconducting dipole magnets is shortened when conducted in superfluid helium at 1 atm [1]. During a magnet quench, local transition from He II to He I or vapor can take place. We report on experimental results of the He II-He I transition, their coexistence and stability during a continuous change from He II to He I, and vice versa.

EXPERIMENTAL SET UP

A dewar design, based on the principle of the Claudet bath [2], provides He II at 1.8 K and 1 atm on a continuous basis. A detailed description of the Lawrence Berkeley Laboratory system is reported at this conference (Warren, 1980). The dewar consists of a 28-ℓ He I chamber, a 142-ℓ He II chamber, and a He II refrigeration system (Fig. 1). The He I chamber is a heat intercept for the magnet current leads and instrumentation wires, a liquid supply for 1.8 K refrigeration, and a pressure regulator for the lower He II reservoir. The tube connecting the two chambers permits a mass flow to regulate the pressure. During steady state operation, He I at 4.2 K and 1 atm is precooled to about 2.2 K in a counter flow heat exchanger. It then expands through a regulated Joule Thompson valve, and exits at a vapor pressure corresponding to about 1.75 K. Downstream, it exchanges heat with the 1.8 K He II reservoir, then precools the counterflow heat exchanger, and finally exits to a pump.

Seven carbon glass thermometers were placed inside the dewar. In the upper vessel, T1 and T2 were placed 1 mm and 10 mm from the bottom. In the lower He II reservoir, the sensors were mounted as follows (distances are below the top flange): T3 - 5 mm, T4 - 30 mm, T5 - 365 mm, T6 - 835 mm, and T7 - 1255 mm at the bottom of the dewar. The temperature was measured using an H.P. 9845 data acquisition system with an accuracy better than 5 mK below T_λ.

THEORY

The coexistence of He II and He I in thermodynamic equilibrium is not possible. The lambda transition is characterized by a continuity in density and the absence of a latent heat of transition. However, when a thermodynamic potential is imposed, He II

and He I can coexist [3]. The He II - He I boundary forms a two-dimensional interface whose reported thickness δ is 6×10^{-2} mm [4,5]. The following one-dimensional model assumes: a) The interface diffuses at a constant velocity V_b (Fig. 2), b) thermal diffusivity α in He I is not a function of temperature, and c) convection is suppressed. In He I the time dependent diffusion equation for $x \geqslant 0$ using a frame of reference traveling with the interface is

$$\frac{\partial T}{\partial x} = -\frac{\alpha}{V_b}\frac{\partial^2 T}{\partial x^2} \tag{1}$$

where $T = T_\lambda$ at $x = 0$, $T = T_\infty$ at $x \to \infty$.

Solving Equation (1) results in

$$\frac{T - T_\infty}{T_\lambda - T_\infty} = e^{-x/\delta} \tag{2}$$

where $\delta = \alpha/V_b$ is the characteristic length of the interface. Substituting for δ and α in Equation (2) the heat flux density q_I at $X = 0$ is then written

$$q_I = C_p\,(T_\infty - T_\lambda) = \Delta H \cdot V_b \tag{3}$$

where ΔH is the enthalpy difference per unit volume of He I between T_∞ and T_λ. In He II the internal convection heat transfer process is given by

$$q_{II} = (\rho ST)_\lambda\, V_n \tag{4}$$

where S is the specific entropy, V_n is the normal fluid velocity, and the product is taken at T_λ. Because the transformation does not require any latent heat of transition, $q_I = q_{II}$, giving

$$V_b/V_n = (\rho ST)_\lambda/\Delta H \tag{5}$$

where $(\rho ST)_\lambda = 0.492$ (J/cm^3) at 1 atm. Equation (5) is plotted as a function of T_∞ in Figure 3.

EXPERIMENTAL RESULTS

During a typical experiment approximately three hours after the J.T. valve was set into operation, the liquid at the heat exchanger vicinity reached T_λ. During this period, the liquid below the heat exchanger showed good mixing resulting in a temperature difference T7 - T5 < 100 mK. Above the heat exchanger, the liquid was stagnant and the temperature remained near 4.2 K. Figure 4 shows the time response during the transition. Temperature sensor T5, the first to indicate T_λ was reached, remains constant until the remainder of the sensors in the lower reservoir reached T_λ. The expansion of this "lambda liquid" is gravitationally free and is caused by the heat transfer process at the He I - He II boundary (Eq. 5). Helium II expands upwards and downwards but at different rates. Experimentally when the transition boundary passes a sensor location the measured temperature drops to T_λ and remains constant. The boundary is sharp as shown in Fig. 4. Sensor T3 does not see the cold boundary approaching until the temperature at T4, which is only 25 mm away, has been at T_λ for some time. We estimate T3 remains around 4 K until the boundary is within 1 mm from the sensor. The boundary is thought to be even sharper than the 3 mm thickness of the sensors. The boundary velocity between sensors T6 and T7 which start as $T_\infty = 2.2$ K is 2 mm/sec, for sensors T3 and T4 at $T_\infty = 4$ K, $V_b = 0.1$ mm/sec. These values are typical and depend on refrigeration power. Using the appropriate thermal diffusivity, the corresponding characteristic length is $\delta = .38$ mm at 4 K and $\delta = 2.8 \times 10^{-2}$ mm at 2.2 K (Fig. 5). Based on calorimetric measurements in He II, the total heat flux density at

the interface is estimated to be 5 mW/cm^2 which results from Eq. 4 with V_n = 0.1 mm/sec. The ratio of V_b/V_n for the data is plotted in Fig. 3. When T3 = T_λ, the boundary is in the small cross section tube connecting to the upper chamber where the superfluid can maintain a temperature gradient due to mutual friction. The temperature in the lower vessel starts to drop again and as the temperature is lowered the boundary moves up the tube. When the temperature reaches 1.90 K, the boundary reaches sensor T2 (Fig. 6) and T1 when it is at 1.80 K. The temperature in the lower part of the upper bath never drops below T_λ.

When the He II refrigeration system is shut off, the He I reservoir acts as a heat source and the temperature in the lower reservoir increases uniformly up to T_λ. The He I region expands into He II faster than the reverse process during the cooldown because the total change in enthalpy is less. Helium I enthalpy locally raises the temperature on the He II side of the boundary so as $\Delta H \rightarrow 0$, V_b/V_n will rise to high values (Fig. 3). As seen in Figure 7, the front propagated 1250 mm between two readings 45 seconds apart. The lower bound for the propagation velocity is then $V_b > 30$mm/sec and $V_b/V_n > 300$, thus the characteristic length δ is about 2×10^{-3} mm.

CONCLUSIONS

Under non-equilibrium conditions, He II can be stably situated in a gravitational field between layers of He I. The interface always propagates at a rate which depends on the instantaneous He I temperature T_∞. The rate at which He II is produced by subcooling He I is faster if the cooling is done at the top, because of thermal convection in He I. Helium II when heated to T_λ will convert to He I at a velocity near that of second sound.

ACKNOWLEDGEMENTS

This work was supported by the U.S. Department of Energy under Contract No. W-7405-ENG-48.

REFERENCES

1. To be published in Cryogenics and in The Proceedings of the Applied Superconductivity Conference, 1980.

2. Claudet, G. et al., "The Design and Operation of a Refrigerator System Using Superfluid Helium". Proc. 5th Int. Cryog. Conf., Kyoto (1974), p. 265-267.

3. Scurlock, R. G. and O. B. Utton, "Transition Between Normal and Superfluid Helium 4 in the High-Speed Rotating Frame", Nature, vol. 272 (March, 1978), p. 148-151.

4. Ahlers, G., K. H. Bennemann and J. B. Ketterson, Editors, The Physics of Liquid and Solid Helium, XXIX: 85 - 120, Wiley, 1976.

5. Caspi, S. and T. H. K. Frederking, "Triple-Phase Phenomena During Quenches of Superconductors Cooled by Pressurized Superfluid He II." Cryogenics, vol. 19 (September 1979), p. 513-516.

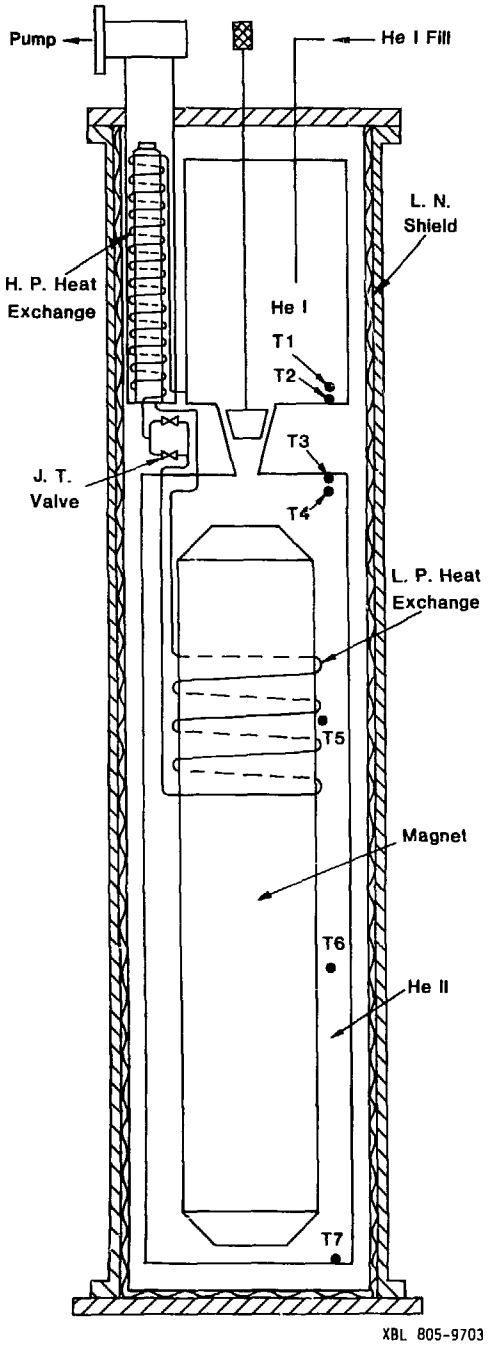

Fig. 1. Superconducting magnet support system.

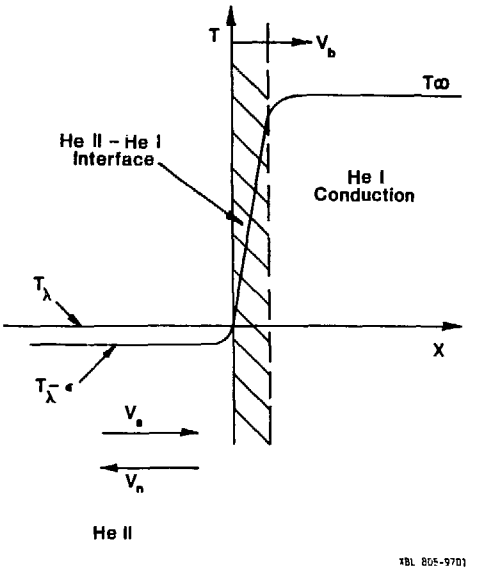

Fig. 2. The helium II - helium I interface

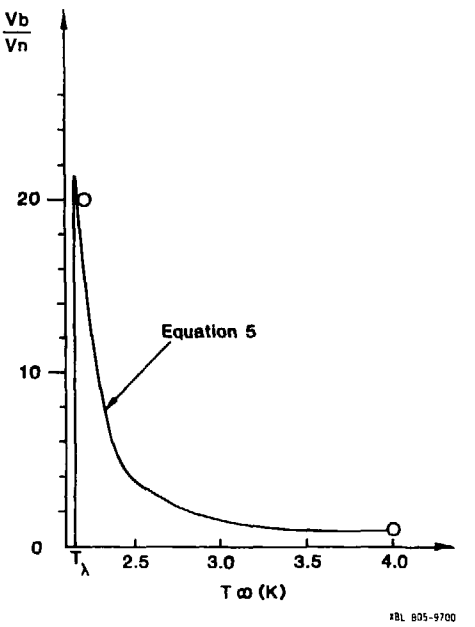

Fig. 3. Interface velocity as a function of HeI temperature.

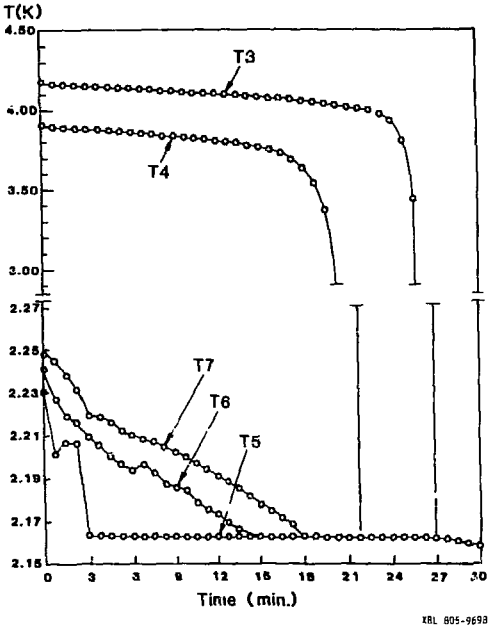

Fig. 4. Temperature response during cool down.

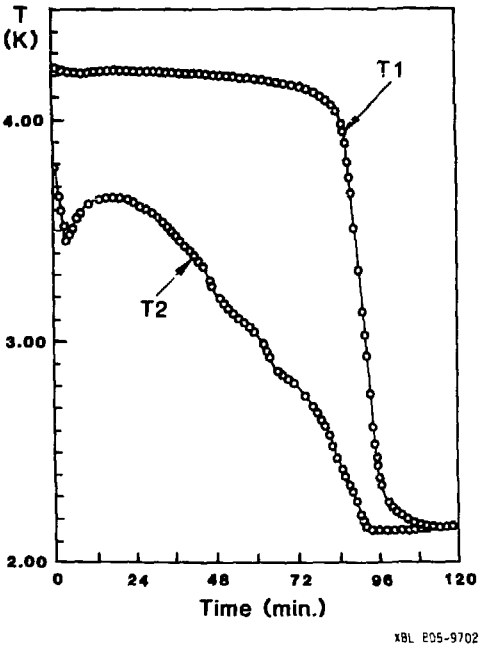

Fig. 6. Temperature response at the bottom of the HeI reservoir.

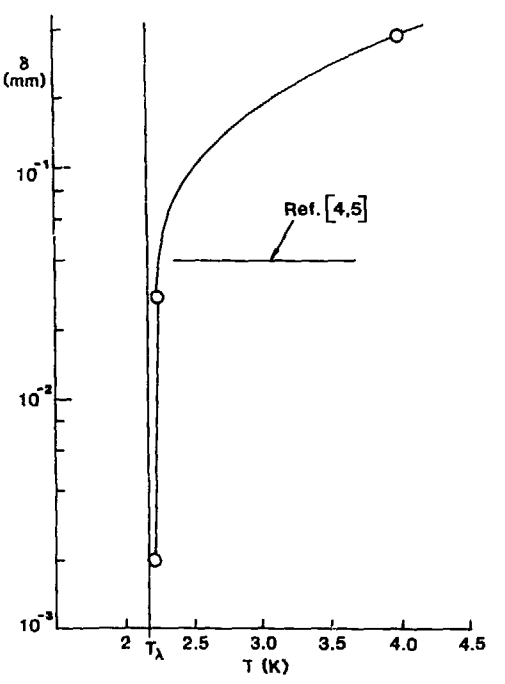

Fig. 5. Interface thickness as a function of HeI temperature.

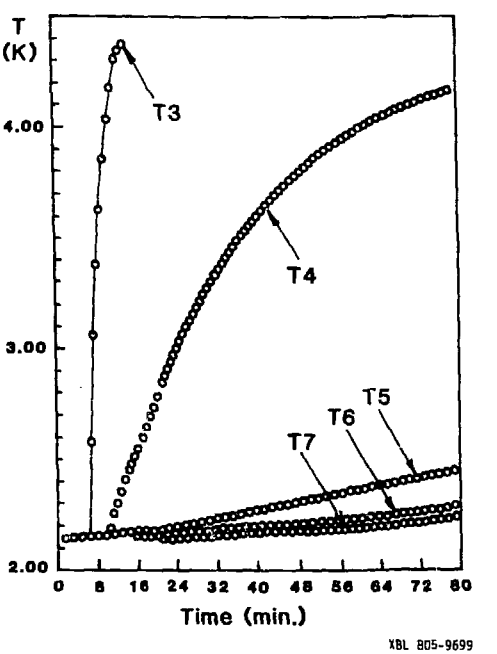

Fig. 7. Temperature response during warmup.