LBL-10976

CONF-800631--8

Lawrence Berkeley Laboratory

UNIVERSITY OF CALIFORNIA

MASTER

Engineering & Technical Services Division

RECEIVED BY TIC JUL 17 1980

To be presented at the 8th International Cryogenic Engineering Conference, Genoa, Italy, June 2-6, 1980

THE OPERATION OF A FORCED TWO PHASE COOLING SYSTEM ON A LARGE SUPERCONDUCTING MAGNET

M. A. Green, W. A. Burns, P. H. Eberhard, G. H. Gibson, M. Pripstein, R. R. Ross, R. G. Smits, J. D. Taylor and H. Van Slyke

May 1980

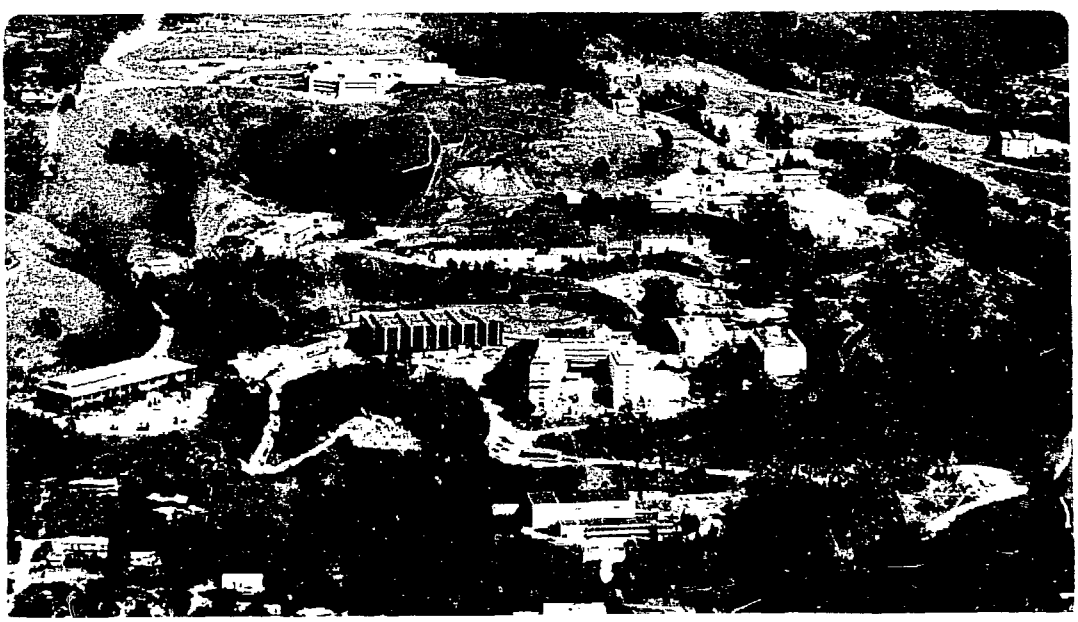

Prepared for the U.S. Department of Energy under Contract W-7405-ENG-48

DISTRIBUTION OF THIS DOCUMENT IS UNLIMITED

DISCLAIMER

This book was prepared as an account of work sponsored by an agency of the United States Government. Neither the United States Government nor any agency thereof, nor any of their employees, makes any warranty, express or implied, or assumes any legal liability or responsibility for the accuracy, completeness or usefulness of any information, apparatus, product, or process disclosed, or represents that its use would not infringe privately owned rights. Reference herein to any specific commercial product, process, or service by trade name, trademark, manufacturer, or otherwise, does not necessarily constitute or imply its endorsement, recommendation, or favoring by the United States Government or any agency thereof. The views and opinions of authors expressed herein do not necessarily state or reflect those of the United States Government or any agency thereof.

THE OPERATION OF A FORCED TWO PHASE COOLING SYSTEM ON A LARGE SUPERCONDUCTING MAGNET

M.A. Green, W.A. Burns, P.H. Eberhard, G.H. Gibson, M. Pripstein, R.R. Ross, R.G. Smits, J.D. Taylor and H. Van Slyke

Lawrence Berkeley Laboratory, 1 Cyclotron Road, Berkeley, CA 94720 USA

This paper describes the operation of a forced two phase cooling system on a two meter diameter superconducting solenoid. The magnet is a thin high current density superconducting solenoid which is cooled by forced two phase helium in tubes around the coil. The magnet, which is 2.18 meters in diameter and 3.4 meters long, has a cold mass of 1700 kg. The two phase cooling system contains less than 300 liters of liquid helium, most of which is contained in a control dewar. This paper describes the operating characteristics of the LBL two phase forced cooling system during cooldown and warm up. The paper presents experimental data on operations of the magnet using either a helium pump or the refrigerator compressor to circulate two phase helium through the superconducting coil cooling tubes.

THE TPC MAGNET AND ITS CRYOSTAT

The TPC superconducting magnet provides magnetic field for the Time Projection Chamber detector experiment which will operate at the PEP electron-positron colliding beam facility at the Stanford Linear Accelerator Center. The TPC magnet generates a magnetic induction of 1.5 Tesla which is uniform to about 1 part in 1000 over a cylinder which is 2 meters in diameter and 2 meters long.

The TPC magnet is designed to be thin, compact, and of low mass. The TPC magnet system including the coil, cryostat and TPC pressure vessel is designed to be about 0.65 radiation lengths thick. The TPC magnet coil operates at superconductor matrix current densities of 7×10^8 Am^{-2}. The magnet itself is quench protected by shorted secondary circuits made from aluminum.[1,2,3] The TPC magnet is force cooled with two phase helium which flows in tubes around the coil. The coil cross-section is shown in Figure 1. The basic parameters for the TPC superconducting magnet are shown in Table 1.

TABLE 1 Basic TPC Superconducting Magnet Parameters With Iron

Magnet warm bore diameter	2.04 m
Magnet cryostat outside diameter	2.44 m
Magnet cryostat length	3.84 m
Central induction in the bore	1.5 T
Peak magnetic induction in winding	1.53 T
Magnet current	2226A
Superconductor current density	$6.87 \times 10^8 Am^{-2}$
Magnet coil self inductance	4.41 H
Magnet stored energy at design current	$10.9 \times 10^6 J$
EJ^2 limit	$5.1 \times 10^{24} A^2 m^{-4} J$

The TPC magnet cryostat has an inside warm bore of 2.04 m. The inner vacuum vessel is also an 11 atm pressure vessel made from 19.1 mm thick 5456 aluminum. (The pressure vessel gas seals are made on the ends of the TPC magnet cryostat.) The outside diameter of the cryostat is 2.44 m at the ends and 2.36 m in the

DISTRIBUTION OF THIS DOCUMENT IS UNLIMITED

central section. The 40 mm deep well contains drift chambers to track particles which have passed through the magnet and its cryostat.

The TPC magnet vacuum vessel is built in two parts. The outer part contains the end wall with the magnet services through it. The magnet coil package is supported to the outer vessel through 16 bicycle spoke type support rods made from NEMA G-10CR. The total heat leak through the support rods is expected to be around 5 Watts. The inner and outer vessels are bolted together. A seal band is welded across the bolts and the joint forming a vacuum tight welded vessel (see Figure 2 for a vacuum vessel cross-section).

The warm bore of the TPC magnet is filled with charged particle detectors, and the magnet is surrounded by nuetral and muon detectors. Space at the end of the magnet are limited by some 15000 signal wires which pass through the high pressure seal rings attached to the ends of the magnet cryostat. Access to the magnet for cryogenic services, vacuum pumping and electrical leads is limited to the outside corner at one end of the magnet. Figure 3 shows the finished TPC magnet mounted in its test stand. One will note that this is the end of the magnet where there are no service ports.

THE TPC MAGNET FORCED COOLING SYSTEM

The TPC magnet and its compensation solenoids are adiabatically stable superconducting magnets. Direct contact of liquid helium with the superconductor is not required. As a result, forced cooling is attractive for the following reasons: 1) Cooldown is well-controlled because the helium flows in a well defined path. 2) The magnet system mass and radiation thickness is lower than for a bath cooled system. 3) The amount of helium in direct contact with the coil is minimized. A two phase cooling system was chosen instead of single phase cooling because the operating temperature is lower and boiling heat transfer can transfer large local heat fluxes without changing the temperature of the helium stream. The helium flow circuit to the TPC magnet solenoids is shown in Figure 4.

(a) Refrigerator

The TPC magnet refrigerator is a CTi Model 2800 refrigerator which operates on a central screw compressor facility. The CTi cold box has Sulzer gas bearing turbine expanders and liquid nitrogen precooling. The refrigerator is designed to deliver 200 W at 4.5 K with liquid nitrogen precooling. Recent tests[4] of the refrigerator show that it can deliver 240 W of refrigeration plus 15 liters per hour of liquifaction (with nitrogen precooling). As a liquifier the machine can make 100 liter per hour. The CTi Model 2800 refrigerator was not used for system tests at LBL.

(b) Control dewar

The control dewar is the key element in the TPC magnet cryogenic system. It performs the following functions: 1) it holds most of the liquid helium in the TPC cryogenic system and all of the reserve liquid helium (176 liters versus about 90 liters in the TPC magnet, compensation solenoids, and the transfer lines); 2) it insures that there will be liquid in the two-phase cooling coils in the magnets even when the heat load at the magnet coils is as much as 50 percent greater than the rate of refrigeration; and 3) it insures that the pressure drop through the magnet cooling tubes is minimized.

Two kinds of systems can be used to circulate low-quality helium through the TPC magnet cooling tube. (Quality is defined in the steam sense, zero quality helium is all liquid.) They are: 1) a liquid helium pump used as a circulator, or 2) the refrigerator compressors used as a circulator. Both systems use a heat exchanger to insure that the helium will enter the system at or near the saturated liquid line. Figure 5 shows schematic diagrams of the two approaches.

The helium pump loop system shown in Figure 5a has these advantages: 1) The refrigerator is completely decoupled from the load. One could substitute liquid helium from a storage dewar for the refrigerator. 2) The mass flow through the system is limited by the capacity of the pump, not the capacity of the refrigerator. But the system also has disadvantages: 1) The pump work is put into the helium, and therefore extra refrigeration must be supplied to overcome the work that goes into pumping. 2) The simple pump loop system shown in Figure 5a cannot be used to cool the magnet down directly from room temperature; (one can cool the magnet down from liquid nitrogen temperature). The LBL helium pump is described in Reference 6.

The refrigerator compressor can be used as a circulator provided a heat exchanger is used in an accumulator (the control dewar). The function of this heat exchanger is to reduce the inlet quality of the two phase helium to the magnet cooling tube. The quality change across the magnet remains the same for a given mass flow in the circuit. The circuit shown in Figure 5b has two Joule Thompson valves (J-T valves) which expand the gas in two stages. The first J-T valve expands the gas to a pressure of about 3 bar. The gas is heated while it's being expanded from 15-18 bar to 3 bar. The heat is transferred to the boiling liquid helium in the accumulator tank as the gas flows through the heat exchanger. Expansion of the gas from 3 bar to the final inlet pressure of the load will result in an inlet quality at the load which appraoches zero. If there were no heat exchanger, the inlet quality at the load would be around 0.4; the pressure drop in the tubular coolnig system would be a factor of 2 to 3 higher. The flow systems are analyzed from a thermodynamic stanpoint in Reference 5.

(c) Conditioner system

The conditioner system serves two functions. The conditioner is a storage reservoir for liquid nitrogen from which a nitrogen pump within the conditioner dewar circulates liquid nitrogen through the magnet cryostats and transfer lines. The conditioner system plays an important role in the cooling down and warming up of the TPC magnet system. The conditioner dewar contains a heat exchanger that permits warm helium gas to be cooled down to 90K in order to cool the TPC magnet system to 100 K quickly.[5] The conditioner system also contains gas heaters that warm gas entering the TPC magnet (during a warm-up) and gas leaving the TPC magnet (before its return to the compressor).

(d) Forced flow circuit and transfer lines

The flow circuit for the TPC magnet, its compensators and transfer lines is 500 m long. The TPC magnet contains 350 m of the equivalent of 15 mm ID tube. There is 90 m of transfer lines and the remaining 110 m of flow circuit is split between the two compensation solenoids. The flow circuit is designed to carry helium at the rate of 12 to 15 gs^{-1}. At 12 gs^{-1} the flow circuit pressure drop ranges from 14 atm (when the magnet is at room temperature) to 0.2 atm (when forced two phase flow is established in the tube). The TPC flow circuit is designed to handle pressurs of 70 atm during a quench.

The 90 meters of transfer lines carry both liquid helium and liquid nitrogen. The liquid nitrogen tube acts as a trace to shield the transfer lines. The transfer lines are designed to be simi-flexible (when they are warm) with a bend radius of about 1 meter. The calculated heat leak for the transfer line was estimated to be about 0.2 Wm^{-1} plus bayonet heat leaks.

The gas cooled electrical leads for the TPC magnet and its compensators are attached directly to the two phase flow circuit (there is no separate lead pot). Both of the TPC magnet leads are buried within the cryostat vacuum. One lead operates at a 60° angle (with the cold end down); the other lead operates nearly horizontal. As a result of being part of the flow circuit and having to operate at unusual orientation, we required that the electrical leads have the following operating characteristics: 1) a reasonable efficiency (0.1 to

0.12 gs^{-1} of gas per lead pair per 1000 A), 2) the capability of withstanding pressures of 70 to 100 atm without damage, 3) the capability of operation without gas for 20 to 30 minutes without damage to the leads or the magnet, and 4) the ability to operate in the horizontal position. To meet these criteria we chose a copper tube lead with a heat exchange enhancing insert. (The so called LBL "Tampax" lead.) See Reference 7.

THE TPC MAGNET VACUUM SYSTEM

The high energy physics requirements of the TPC experiment put space at the end of the magnet cryostat at a premium. As a result, the vacuum pumping for the cryostat is limited. The cryostat vessel is a welded structure. All vacuum pumping into the vessel, which has a volume of 4 m^3 containing 5000 m^2 of superinsulation, is through a pair of 50 mm diameter ports. The vacuum pumping system is located about 2.5 m from the cryostat. Vacuum pumping is conductance limited.

The primary vacuum pumping system is a cryoadsorption pumping system with a mechanical roughing pump as a backup. We use a Varian Megasorb pump as the primary pump. We have found that it will pump all gases, but its ability to pump neon, hydrogen and helium is very limited. Our experience using the cryoadsorption pumps indicates that one should have no trouble getting pressures in the 10^{-4} Torr range, once the condensibles (i.e., water) have been pumped out or frozen on the nitrogen shield.

The high-vacuum pumping system for helium, which is required because of small leaks in the tubular cooling system, consists of copper cans filled with Lindi molecular sieve 5A. 20-30 kg of getter material was installed around the ends of the TPC magnet. The molecular sieve getter is capable of pumping large amounts of helium gas when it is cooled to 4.5 K. Nitrogen and other gases will cryopump directly to the surface of the magnet coil package. The 20-30 kg of 5A molecular sieve will pump 500-700 g of helium before the pressure in the cryostat is raised above 2 x 10^{-6} Torr.[8] Small helium leaks won't even be seen as long as the magnet is cold. Problems will arise when there is a magnet quench because the helium captured by the getter will be released into the vacuum space. The back-up mechanical pump and diffusion pump will be used to bring the pressure back down so that the magnet can be recooled.

TESTS OF THE TPC MAGNET CRYOGENIC SYSTEM

Various components of the TPC magnet cryogenic system were tested in the Spring of 1979. The full TPC magnet cryogenic system was tested in the Spring of 1980. A number of problem areas were found and corrections were made in the plumbing. The following tests were made on the cryogenic system: 1) the control dewar heat leak was measured by helium boil-off; 2) the control dewar and transfer lines were operated on a CTi Model 1400 refrigerator and the LBL 1500 Watt refrigerator; 3) the control dewar, transfer lines and a set of "Tampax" lead operated at near horizontal were measured using liquid helium boil-off calorimetry; and 4) the entire TPC magnet system was cooled off and operated on liquid helium circulated by the pump.

(a) Component tests

The control dewar heat leak was measured in April of 1979 using helium boil-off calorimetry. When the control dewar had penetrations in the plug, the heat leak into the 175 liter dewar was from 1.2 to 5.0 Watts depending on liquid level. (This also includes heat leak down instrumentation connections and the helium pump shaft.)

The TPC control dewar and part of the transfer lines were successfully operated

on the CTi Model 1400 refrigerator and a 1500 W refrigeration built by CTi and Sulzer. The tests on the TPC magnet cryogenic distribution system and tests on a series of LBL test magnets have demonstrated how the two phase forced cooling cooling system works on a refrigerator.[9,10,11] The refrigerator compressors circulate helium through a load very well. There is ample evidence to suggest that dual J-T expansion probably does not have to be used in the TPC magnet.

The control dewar, 34 meters of transfer line and a pair of single tube "Tampax" type leads were tested on the TPC cryogenic system when the liquid helium pump was used as a circulator. These tests resulted in reasonably accurate calorimetry and proof positive that the TPC magnet electrical leads will work in a satisfactory way. Good calorimetry measurements of the transfer lines was difficult to make. Problems with thermal acoustic oscillations, standpipe oscillations, and pump work confused the issue. The heat leak into the transfer lines (35 meters), the dummy load box, and the control dewar appear to be from 15 to 25 W depending on how the data is interpreted. It is now believed that the transfer line heat leak is 0.25 to 0.4 Wm^{-1} with liquid nitrogen in the third tube. The estimated heat load without liquid nitrogen in the third tube is in the range of 2 to 2.5 Wm^{-1}.

Two straight single-tube gas-cooled current leads were used to model the TPC magnet leads. The leads were fabricated from a single 15.9 mm (0.625-inch) OD type L copper pipe with 1.0 mm (0.040-inch) walls. The "Tampax" section is a blocked stainless steel tube sized so that the clearance between the ID of the copper and the OD of the stainless steel tube is a 0.5 mm (0.020-inch) annular space. The length of the lead is 533 mm (21-inches), exactly the length of the TPC leads. Since the lead is one tube instead of five, it is designed to carry one-fifth of the TPC magnet 2300 A design current.

The results of the "Tampax" lead experiment are described in detail in reference 7, but a summary of the results is as follows:

1) The test leads ran well at currents up to 800 A. At the design current of 460 A the leads ran well with a gas flow of 0.044 gs^{-1} for both leads.

2) The heat leak into the two phase flow circuit was nearly zero whether or not current was flowing in the leads as long as there was adequate gas flow.

3) The heat leak into the two phase flow circuit varied very little with lead angle. Tests were made ar various angles between 22° (the cold end is lower than the warm end) and -10° (the cold end was about 10 cm above the warm end).

4) The test leads were run witout gas for 27 minutes at a current of 460 A. The highest temperature measured on the leads was less than 100°C. Heat flow measurements down the leads suggest that the TPC magnet would be driven normal before its electrical leads would burn-out.

(b) Tests of the TPC magnet cryogenic system

On 7 May 1980 the TPC magnet became superconducting for the first time. The TPC magnet was cooled down from room temperature to 4.8 K using the conditioner system and pumped liquid helium from the control dewar. The TPC magnet, which has a cold mass of 1700 kg was not cooled down with a refrigerator. We had intended to use the LBL 1500 W refrigerator for this test but the machine was inoperable due to turbine failure. Figure 6 illustrates the cooldown sequence when the control dewar and helium pump were used to cool the TPC magnet down.

The TPC magnet is designed to be cooled down in 24 to 36 hours using a combination of refrigerator and the conditioner. The flow circuit is designed to carry 12 gs^{-1} during cooldown and normal operation. Before the cooldown was started, liquid nitrogen was circulated through the liquid nitrogen shield. The shields

reached temperatures of between 90 and 115 K. When the shields cooled down, the cryostat vacuum vell from 2 X 10^{-2} Torr to 2 X 10^{-4} Torr. (The 5000 m^2 of inized mylar outgasses badly.) Once the nitrogen shield was cooled helium gas from a pair of CTi 1400 compressors circulated at the rate of 10 gs^{-1} through the liquid nitrogen in the conditioner cryostat (see Figure 6a). During the first part of the cooldown, the magnet cooled down at rates as high as 40 K per hour. Temperature gradients as high as 40 Km^{-1} were also observed. After the first three hours of the cooldown, the helium mass flow from the compressors had to be reduced to about 4 gs^{-1} because the conditioner dewar emptied too quickly. A temperature of 95 K was achieved after 36 hours. The resistance of the superconducting coil dropped from 106 ohms to 18.7 ohms, the pure aluminum resistance dropped from 15.7 ohms to 2.01 ohms. The vacuum within the cryostat envelope was about 5 x 10^{-5} Torr when the magnet temperature reached 95°K.

The second phase of the cooldown (from 95 K to about 5 K) used the positive displacement liquid helium pump to circulate liquid helium from the control dewar through the magnet cooling circuit to the vent. This phase, which is illustrated in Figure 6b, uses both the latent and sensible heat in the helium. Approximately 30 MJ of thermal energy was removed from the coil. About 1600 liters of liquid helium was used to cool the coil. During this phase of the cooldown, the helium pump operated at pressure differentials as high as 4 atm. The rate of cooldown was limited by the rate at which liquid helium could be transfered from 500 liter storage dewars. It took 11 hours to cool the magnet from 95 K to 4.8 K. Just before the TPC magnet went superconducting the superconducting coil resistance dropped to 0.65 ohm; the pure aluminum coil resistance dropped to 0.0183 ohms (including stainless steel leads to room temperature). The vacuum in the cryostat dropped to 10^{-6} Torr with no external vacuum pumping.

The liquid helium circulating system was switched to the normal operating mode where circulated liquid helium was dumped back into the control dewar (see Figure 6c). The pump speed was turned up so that the pump was circulating liquid helium through the TPC magnet at the rate of about 20 gs^{-1}. Gas which came back with the liquid was separated in the control dewar and was vented through a gas flow meter to the atmosphere. The TPC magnet cryogenic system total heat load, including helium pump work was measured to be about 80 W using liquid boil-off gas as a measure of the heat input into the system. The breakdown of the system heat loads (based on measurements made during the entire series of tests) was approximately as follows: 1) magnet cryostat heat leak 20 W, 2) control dewar heat leak 5 W, 3) helium pump work about 20 W, and 4) transfer line heat leaks and thermal acoustic oscillations in the standpipes about 35 W. The cryogenic system test of the TPC magnet was terminated by failure of a shear pin in the liquid helium pump.

ACKNOWLEDGEMENTS

The construction and testing of the TPC magnet involved the efforts of many people. Special thanks and acknowledgement go to the following people for their role in the success of the magnet cryogenic system: A.P. Barone, D.E. Coyle, A.B. Carvalho, S.R. Greve, D.E. Harrison and C.A. Knopf of the LBL shops; J.M. DeOlivares, R.D. Garfinkel and P.B. Miller of Mechanical Engineering; C.L. Covey, P.C. Harding and E.E. Lee of our Technician group; and N.R. Andersen, P.L. Andrews, C.T. Day, J.W. Gary, G.R. Lynch, P.S. Martin, W. Moses, P.J. Oddone and M.D. Shapiro of Physics division. We thank numerous other people who contributed to the TPC magnet cryogenic system.

REFERENCES

1. P.H. Eberhard et al, "Quenches in Large Superconducting Magnets", The Proceedings of the 6th International Conference on Magnet Technology, Bratislava, Czechoslovakia, August 1977, also LBL 6718.

2. M.A. Green, "The Use of High Current Density Superconducting Coils in Fusion Devices", The Proceedings of the 8th Fusion Engineering Conference, San Francisco, CA, November 1979, also LBL 10043.

3. M.A. Green et al, "A Large High Current Density Superconducting Solenoid for the Time Projection Chamber Experiment", Proceedings of ICEC-7 Conference, London, UK, June 1978, also LBL 7933.

4. Private communication with H. Peterson of SLAC on the CTi 2800 Refrigerator Tests.

5. M.A. Green, W.A. Burns, J.D. Taylor and H. Van Slyke, "The TPC Magnet Cryogenic System", May 1980, LBL 10552.

6. W.A. Burns, M.A. Green, R.R. Ross, J.D. Taylor and H. Van Slyke, "The Construction and Testing of a Double Acting Bellows Liquid Helium Pump", presented at the ICEC-8 Conference in Genoa, Italy, June 1980.

7. M.A. Green, P.L. Andrews, C.T. Day, M. Pripstein, R.G. Smits, J.D. Taylor and H. Van Slyke, "Preliminary Test of the LBL Tampax Leads Operating at Angles Near Horizontal", to be published.

8. Data sheet for Linde 5A Molecular Sieve.

9. M.A. Green, P.H. Eberhard and J.D. Taylor, "Large High Current Density Superconducting Solenoids for Use in High Energy Physics Experiments", Proceedings of ICEC-6 Conference, Grenoble, France, May 1976, also LBL 4824.

10. M.A. Green, "The Development of Large High Current Density Superconducting Solenoid Magnets for Use in High Energy Physics Experiments", University of California at Berkeley doctoral disertation, May 1977, LBL 5350.

11. M.A. Green, W.A. Burns and J.D. Taylor, "Forced Two Phase Helium Cooling of Large Superconducting Magnets", to be published in Vol. 25 Advances in Cryogenic Engineering, August 1979, LBL 9701.

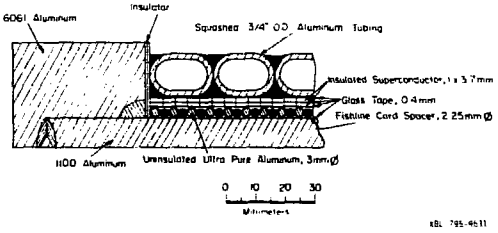

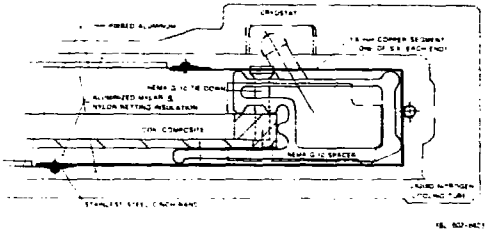

Fig. 1 Cross-Section View Of The TPC Magnet Coil Package

Fig. 2 Cross Section View Of The North End Of The TPC Magnet Cryostat - Vacuum Vessel, Coil & LN Shields

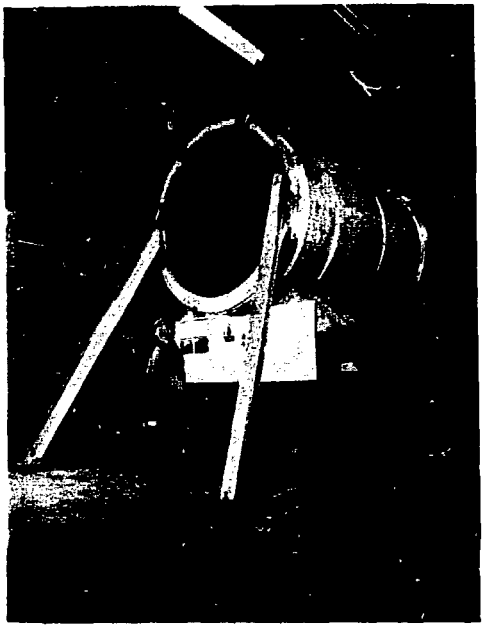

Fig. 3 The Finished TPC Magnet Mounted On The Test Stand

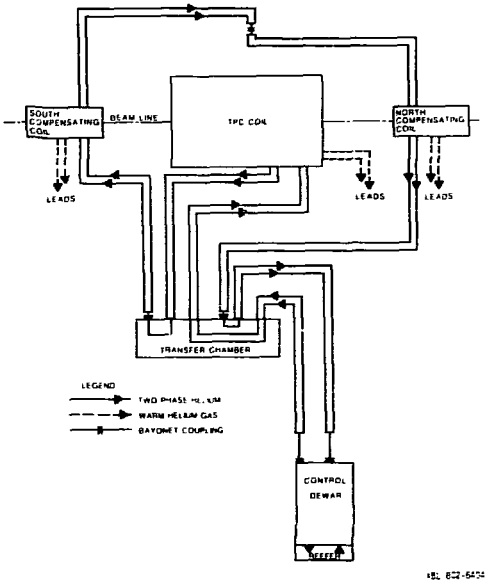

Fig. 4 The Flow Circuit For The TPC Magnet Cryogenic System

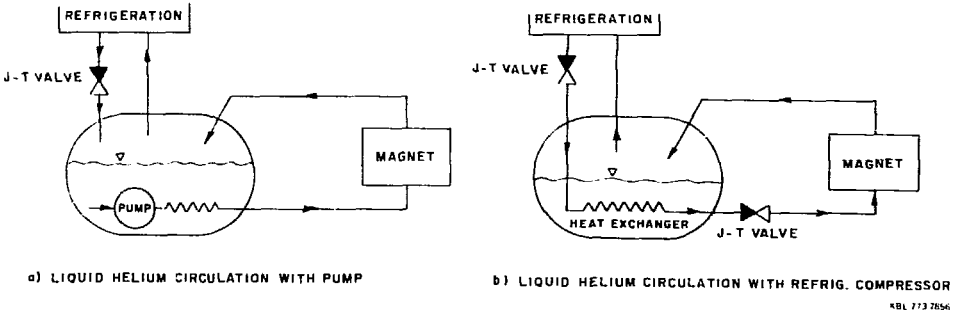

Fig. 5 Two Approaches For Circulating Low Quality Two Phase Helium Through A Tubular Cooling System

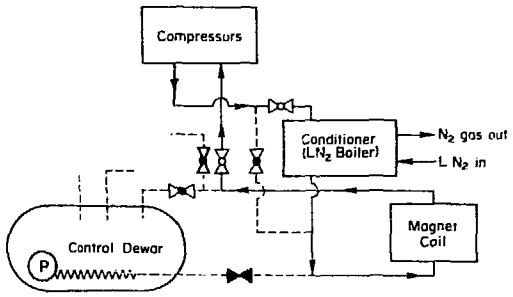

a) Cooldown from 300°K to 80°K.

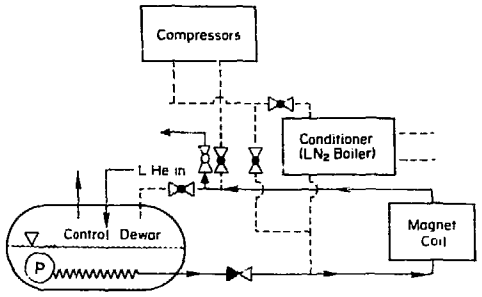

b) Cooldown from 80°K to 10°K.

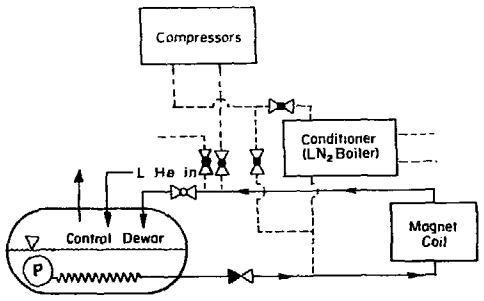

c) Normal operation at temperatures below 10°K.

XBL 805-9671A

Fig. 6 A Schematic Of The Cooling Procedure For the TPC Magnet Using The Liquid Helium Pump As A Circulator