LBL-11255 c. 2
UC-95a
EEB-L-80-06
L-36

Lawrence Berkeley Laboratory

UNIVERSITY OF CALIFORNIA

ENERGY & ENVIRONMENT DIVISION

ELECTRONIC SCREW-IN BALLAST AND IMPROVED CIRCLINE LAMP
PHASE I FINAL REPORT

Thomas P. Kohler

RECEIVED
LAWRENCE
BERKELEY LABORATORY

JAN 27 1981

LIBRARY AND
DOCUMENTS SECTION

September 1980

TWO-WEEK LOAN COPY

This is a Library Circulating Copy
which may be borrowed for two weeks.
For a personal retention copy, call
Tech. Info. Division, Ext. 6782.

Prepared for the U.S. Department of Energy under Contract W-7405-ENG-48

LBL-11255 c. 2

L-36
EEB-L-80-06
LBL-11255

ELECTRONIC SCREW-IN BALLAST AND IMPROVED CIRCLINE LAMP

PHASE I FINAL REPORT

Thomas P. Kohler*

Lawrence Berkeley Laboratory
University of California
Berkeley, California 94720

Prepared for the U.S. Department of Energy
Under Contract No. W-7405-ENG-48

*Chief Engineer
EETech, Division of Beatrice Foods Co.
(Formerly Excel Electronics System Division)
2735 Brundage Road
Baldwinsville, New York 13027

Subcontract No. 4469902

ABSTRACT

A solid state ballast has been designed for the efficient operation of a 10" circline fluorescent lamp. The circuit can be manufactured using power hybrid technology. Eight discrete component versions of the ballasts have been delivered to LBL for testing. The results show the solid state fluorescent ballast system is more efficient than the core-coil ballasted systems on the market.

This manuscript was printed from originals provided by the author.

TABLE OF CONTENTS

		Page
1.1	Summary and Recommendations	1
1.2	Advantages of High Frequency Ballasts	1
1.2.1	Increased Lumens per Watt	2
1.2.2	Increased Lamp Power Factor	3
1.2.3	Reduced Ballast Hum	4
1.2.4	Reduced Ballast Weight	4
1.2.5	Eliminated Ballast Inductor	4
1.2.6	Eliminated Stroboscopic Effect	5
1.2.7	Reduced Radio Interference	5
1.2.8	Radio Interference Measurements	7
1.2.9	Light Level Switch	8
1.2.10	Reduced Modulation	10
1.2.11	Functional Limitations of 10" Circline Ballast	11
1.3	TESTS	
1.3.1	Wave Form Test	11
1.3.2	Arc Watts Measurement	13
1.3.3	Integrated Light Output	14
1.3.4	Starting Endurance Tests	14
1.3.5	Wall Loading Data	14
	Appendix A. EETech Prototype Model	16
	Appendix B. Operating Principle of Flyback Inverter	20
	Appendix C. Schematic Circuit Diagram	25

ELECTRONIC SCREW-IN BALLAST AND IMPROVED CIRCLINE LAMP

1.1 SUMMARY AND RECOMMENDATIONS

The EETech Division of Beatrice Foods Co. has developed an electronic ballast for the new 10 inch Circline lamp. The circuit design is adapted from the EETech circuits used on 8 inch and 12 inch Circline lamps. A sample of eight hardware prototypes was delivered along with a circuit diagram. In-house test results, Lawrence Berkeley Laboratory test data, and prototype characteristics are included in this report. The circuit design was directed towards future conversion to power-hybrid-integrated circuitry. This design has all the inherent technical and economical advantages of high frequency ballasts plus the ability to screw in to a socket with no changes in wiring. However, the disadvantages inherent in "instant start" fluorescent lamps are present. Therefore, it is recommended that future work should include investigation of our new low loss "rapid start" circuit where preheated filaments result in superior lamp life, similar to the two samples that were delivered near the end of the program.

Appendixes include additional test results by Mr. John H. Campbell, our technical analysis of the theory of the flyback inverter used in our Circline ballasts, and a schematic circuit diagram of the 10 inch Circline ballast.

1.2 ADVANTAGES OF HIGH FREQUENCY BALLASTS

The published advantages of high frequency ballasts, compared to 60 Hz magnetic ballasts, are listed below, and may be used as a framework for reviewing the performance of the new EETech 10 inch Circline ballast which operates at a frequency of approximately 33 kilohertz.

These advantages are:

- Increased lumens per watt efficacy (conserves energy)
- Increased lamp power factor
- Reduced ballast hum
- Reduced ballast weight (conserves materials)
- Eliminated ballast inductor
- Eliminated stroboscopic effect

1.2.1 Increased Lumens per Watt

Relative integrated light output was measured on the eight 10 inch prototypes with cool white lamps and compared to a 12 inch circline lamp (FC12T9/CW) with a standard magnetic ballast (G.E. 547-RS). The data and calculated results are tabulated in Table 1.

Table 1. Light and Wattage Data Comparison

Lamp	Ballast	Relative Integrated Light	Input Watts	System Efficacy
12"	Magnetic	464	35	13.3
10"	#1 EETech	619	43	14.4
10"	#2 EETech	662	42.5	15.6
10"	#3 EETech	632	42	15.1
10"	#4 EETech	635	40	15.9
10"	#5 EETech	672	44	15.3
10"	#6 EETech	694	43.5	16.0
10"	#7 EETech	664	43	15.4
10"	#8 EETech	676	40.5	16.7
Average #1-8		657	42.3	15.6

This data demonstrates a 42% increase in light output, and a 21% increase in input power, with a net increase in efficacy of 17%.

Table 2 includes test data and calculated results from tests at Lawrence Berkeley Laboratory. Six EETech prototypes with the same 10" lamp are compared with the new General Electric 10 inch "Circlite" which has a special built-in magnetic ballast and starter.

Table 2. Light and Wattage Comparison with G.E. Circlite at 120 volts input

Ballast	Input Watts	Relative Light *Lumens	System Efficacy	Lamp Arc Watts	Lamp Efficacy	Lamp Amp.	Lumens/ Amp.
G.E. Circlite	43.8	1773	40.5	36.7	48.3	.702	2526
#1 EETech	44.0	1882	42.8	32.2	58.4	.635	
#2 EETech	44.5	1864	41.9	31.6	59.0	.608	
#3 EETech	47.0	1890	40.2	32.5	58.2	.640	
#4 EETech	42.5	1872	44.0	31.5	59.4	.625	
#6 EEtech	46.2	1886	40.8	32.1	58.8	.629	
#7 EETech	46.0	1873	40.7	31.7	59.1	.624	
Average EETech	45.0	1878	41.7	31.9	58.8	.626	3000

* Data normalized, assumes G.E. Circlite produces manufacturer's rated light output (1750 lumens).

The results show that EETech input wattage was 3% greater and lamp arc wattage was 13% less than the G.E. Circlite. The EETech relative light output was 6% greater. The EETech overall efficacy (light out per watt input to ballast) was 3% greater than the G.E. Circlite. With lower lamp arc watts, the lamp efficacy (light out per watt input to lamp) of the EETech lamp was 22% greater than the G.E.Circlite. The light output per ampere was 19% higher than the G.E. Circlite. This demonstrates the basic superiority of high frequency ballasts, i.e. the fluorescent lamp is able to generate more light per watt and per ampere in the gaseous discharge and phosphor. On the other hand, these results also show that the EETech circline ballast circuit is not quite as efficient as the G.E. Circlite magnetic ballast; otherwise the overall efficacy would have been considerably better.

This data and other data show that some EETech units have about the same or slightly less overall efficacy than some G.E. Circlite units. Variability is associated with differences in individual ballasts.

1.2.2 Increased Lamp Power Factor

Table 3 is a tabulation of power factor data and calculations from the same tests described in the previous section.

Table 3. Ballast and Lamp Power Factor

Ballast	Ballast Input Volts	Amp.	Watts	P.F.	Lamp Input Volts	Amp.	Watts	P.F.
#1 EE Tech	120	.710	44.0	.52	51.6	.635	32.2	.98
#2 EE Tech	120	.715	44.5	.52	52.1	.608	31.6	1.00
#3 EE Tech	120	.760	47.0	.52	51.2	.640	32.5	.99
#4 EE Tech	120	.710	42.5	.50	52.1	.625	31.5	.97
#6 EE Tech	120	.760	46.2	.51	51.7	.629	32.1	.99
#7 EE Tech	120	.760	46.0	.50	51.6	.624	31.7	.98
Average EE Tech	120	.736	45.0	.51	51.7	.627	31.9	.99
G.E. Circlite	120	.702	43.8	.52	60.3	.702	36.7	.87

These data demonstrate that the overall ballast and lamp power factor of the EETech unit is essentially the same as the G.E. Circlite However, the power factor of the EETech lamp is nearly 100% as compared to the 87% for the G.E. Circlite. This is typical of the effect of high frequency on the impedance of fluorescent lamps, with negligible inductive reactance at high frequency.

1.2.3 Reduced Ballast Hum

Audible hum is minimized in the EETech 10 inch Circline ballast and the 8 inch and 12 inch EETech ballasts. The operating frequency is ultrasonic to human ears.

The transformer utilizes a ferrite core with no laminations to vibrate. Also, the major ballast impedance is a capacitor instead of a magnetic inductor. If vibrations were present due to 60 hertz drive frequencies, they were not causing audible noise.

1.2.4 Reduced Ballast Weight

The EE Tech prototype units are housed in a 6½" x 2 3/4" x 1 3/4" box at this stage of development, before introduction of integrated circuits. Standard magnetic ballasts for 8" and 12" circline lamps are 6½" x 1 3/4" x 1½". The new G.E. Circlite magnetic ballast is roughly conical in shape like the hub of a 3 spoked wheel. The hub is partly 2" diameter tapering down to 1" diameter at the screw-in adaptor. The height of the hub is 3 3/4". A starter appears to be incorporated into one of the spokes that feed the lamp terminals. Thus, the EE Tech prototype package is slightly larger than standard magnetic ballasts.

Weight comparisons are tabulated in Table 4.

Table 4. Weight Comparison of Ballasts

Ballast	Ounces Weight		
	Ballast	Bulb Only	Total
EE Tech 10"	12.0	7.3	19.3
G.E. Circlite 10", magnetic	23.7	7.3	31.0
EE Tech 8"	10.8	5.5	16.3
Universal 8" magnetic 547-RS	33.5	5.5	39.0
EE Tech 12"	13.3	8.8	22.1
G.E. 12", 8G1085, magnetic	29.0	8.8	37.8

The EE Tech solid state ballast is about half the weight of the G.E. Circlite ballast and only 35-40% of conventional magnetic ballasts.

1.2.5 Eliminated Ballast Inductor

The negative resistance characteristic of the fluorescent lamp requires an external series impedance ballast after starting. Conventional 60 or 50 hertz ballasts use inductive reactance. Some European ballasts use filament lamps for ballasts in 240 volt applications. The high frequency ballast is able to use capacitors which are small, light weight, inexpensive and quiet. For example, the 10" ballast uses capacitors of 0.01 microfarad or less in series with the lamp.

1.2.6 Eliminated Stroboscopic Effect

While the eye cannot detect light flicker at 50 or 60 hertz, it nevertheless may be a source of discomfort. Moving or rotating objects may appear to stand still or rotate backwards, etc., which is particularly noticeable in motion pictures or TV camera work and may even be a safety hazard with rotating machinery in factories. With lamp frequencies of the order of 33 kilohertz, there will be no stroboscopic effect with the solid state ballast at its fundamental frequency. Light flicker results from power supply "ripple" which is a function of how well the rectifier output is filtered. The 10 inch EETech ballast has a lamp current ripple factor of only 8% which will result in very little flicker compared to magnetic ballasts.

1.2.7 Reduced Radio Interference

Radio interference (EMI) for home environment is a complicated issue. Since existing government codes are easily met, a standard must be established which can be met without jeopardizing the economic limits of the marketability of the product while still satisfying the customer comfort level. Since Sears Roebuck has considerable experience in this area, we worked very closely with their experts. Qualitative experience, discussions and testing resulted in a reasonable standard of no "objectionable" interference on either the AM or FM bands at a distance of five feet from the ballast. However, the overall effectiveness of the EETech ballast cannot be measured until the prototype is repackaged in near final form. Nevertheless, before reaching that stage, the EMI problem was attacked vigorously and an effective, practical and economical EMI filter was designed and is an integral part of the circuit.

A major element for EMI propagation is the 60 Hertz power line which can conduct direct-coupled or capacitively-coupled interference to radio receivers. The power line can also act as an antenna, reradiating RF interference that it is conducting. Therefore, attenuation of conducted EMI must be designed into the ballast circuit. An AC line filter was quickly rejected from consideration since capacitors that will withstand full AC line voltage are bulky and expensive. A more ingenious approach is to introduce the filter on the DC side of the power supply rectifiers. Then the capacitors can be compact electrolytic capacitors. The EMI filter does double duty since it also filters and reduces AC ripple going to circuits and lamp.

The interference results from the "carrier" frequency of around 33 kilohertz and its higher harmonics which fall in the radio frequency bands. The carrier harmonics would not be evident in a radio receiver unless there were heterodyning "whistles" during tuning. However, with modulation of the carrier harmonics, the audio frequency components generate audible hum on AM radio receivers.

In the EE Tech circuit, the amplitude modulation comes from the 60 hertz pulses of line current which charge the filter capacitors, and from the 120 hertz ripple at the output of the filter capacitors. The RF filter is effective in attenuating the RF energy fed back to the 60 hertz line and also reduces ripple modulation.

The pi section filter circuit is shown in Fig. 1.

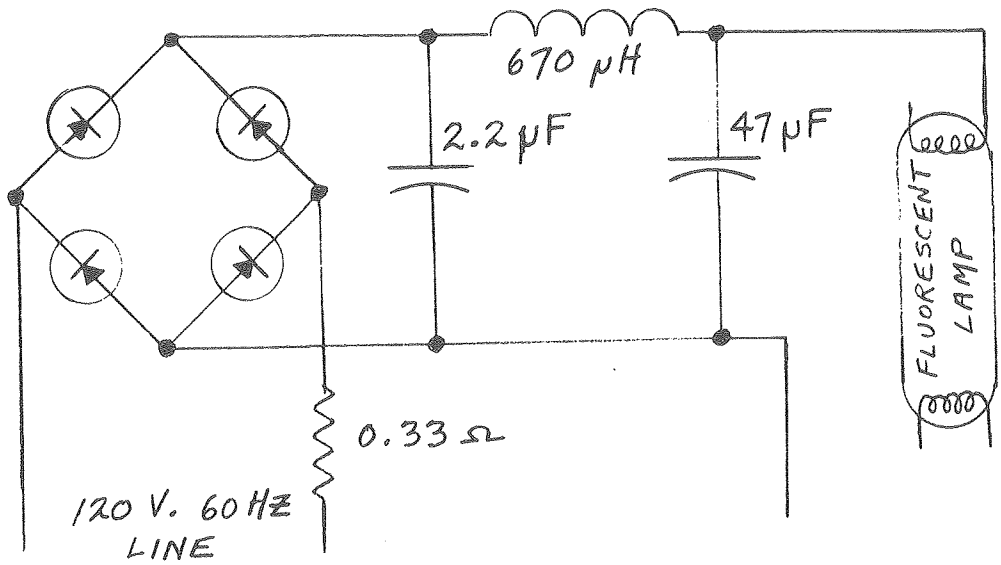

Fig. 1 EMI Filter Circuit

The circuit is a low-pass filter with cut-off frequency around 4 kilohertz. The ratio of output voltage to input current is attenuated 20 dB/decade below cut-off and 60 dB/decade at frequencies above cut-off. This circuit has effectively attenuated line-conducted RF interference.

1.2.8 Radio Interference Measurements

The Circline bulb acts as a loop antenna whenever it is conducting radio frequency current. A loop antenna emits a solenoidal magnetic field with a relatively large axial component (parallel to the axis) near the antenna and a somewhat smaller radial (parallel to the plane of the bulb ring) component. The tangential component is also relatively small.

Relative signal strength was measured by a portable A.M. radio receiver modified by the addition of a milliammeter in the AGC (automatic gain control) circuit. Portable receivers have a ferrite rod antenna which will put out a maximum signal when the rod is aligned with the magnetic vector of the electromagnetic radiation field.

Tests were conducted first with the portable receiver antenna rod in the same plane as the Circline lamp ring. Relative signal strength was observed at several distances from the bulb with the antenna directed radially, axially, and tangentially. Readings were checked using both battery and A-C operation. Additional observations were made with the 10 inch Circline ballast turned off.

The receiver was tuned up and down the AM dial to locate maximum signal strength associated with broadcast stations as well as harmonic frequencies from the Circline ballast. The maximum ballast signal was at around 540 kilohertz. Peaks appear every 30 kilohertz (approximately) above 540, but the magnitude drops off as frequency is increased. Therefore, 540 kilohertz was selected as the worst case test frequency and the receiver was constantly tuned to peak value when the ballast frequency drifted in order to maintain the worst case conditions. If the Circline lamp is in a horizontal plane, the radio interference will be a maximum when the receiver antenna rod is vertical (with the receiver tipped up on its side). When the receiver antenna rod is horizontal and is in the same plane as the Circline bulb, the interference will be less. However, when the horizontal receiver is raised above or lowered below the plane of the lamp, the interference will fall somewhat in between the horizontal and vertical magnitudes due to the solenoidal nature of the Circline field.

If the receiver is tuned to a strong broadcast station, the milliammeter reads above 0.8 milliamperes. A very weak station reads 0.3 ma. or lower. A borderline station reads about 0.5 ma. where program information can be interpreted but background noise level distracts and interferes with accurate and pleasurable listening. Since noise levels are lower at the higher dial frequencies, a weaker signal can be tolerated at the higher frequencies.

At 540 kilohertz, 0.5 ma. was selected as an arbitrary borderline limit for interference from the Circline ballast.

The receiver was first operated with battery power, then A-C power. The receiver antenna was oriented in the same plane as the Circline bulb, and directed radially, axially and tangentially. Background noise readings were observed with the lamp and ballast off.

Normally, the bulb plane would be horizontal and the receiver antenna rod would be horizontal. Under these conditions, the worst case borderline interference was encountered with the receiver closer than 7 to 10 ft. With the receiver antenna rod in the tangential direction, the borderline distance was about 6 ft. The worst case conditions require the radio broadcasting station to be located in the worst direction, putting out low signal strength, and operating directly on a ballast harmonic frequency. On the average, there would not be the coincidence of all three pessimistic conditions, which would permit reasonably good reception on many broadcasting stations by most users of Circline solid state ballast.

Test with A-C power compared to battery power showed very little difference in interference indicating that the filter is effective in reducing RF interference into the A-C power line.

Signal strength of broadcasting stations depends not only on the transmitter output power, antenna efficiency, and daylight and night-time propagation, but also will be attenuated by distance, and by metallic walls, doors and girders in buildings. For example, outside our factory during daylight hours, the test receiver was able to tune in 24 stations with relative signal strength above 0.5 milliampere, with 12 of these above 1.0 milliampere. At a desk in the office, only 5 of the same stations had signal strength above 0.5 ma. and 4 of these were above 1.0 ma. This indicates more interference problems would be encountered in steel industrial office and apartment buildings as compared to residential housing with wood frame construction.

1.2.9 Light Level Switch

It was decided to provide a switch so that the user could choose two light levels. Inclusion of a third light level was rejected since it would be of questionable value, seldom used, and not worth extra cost.

The switching circuit follows:

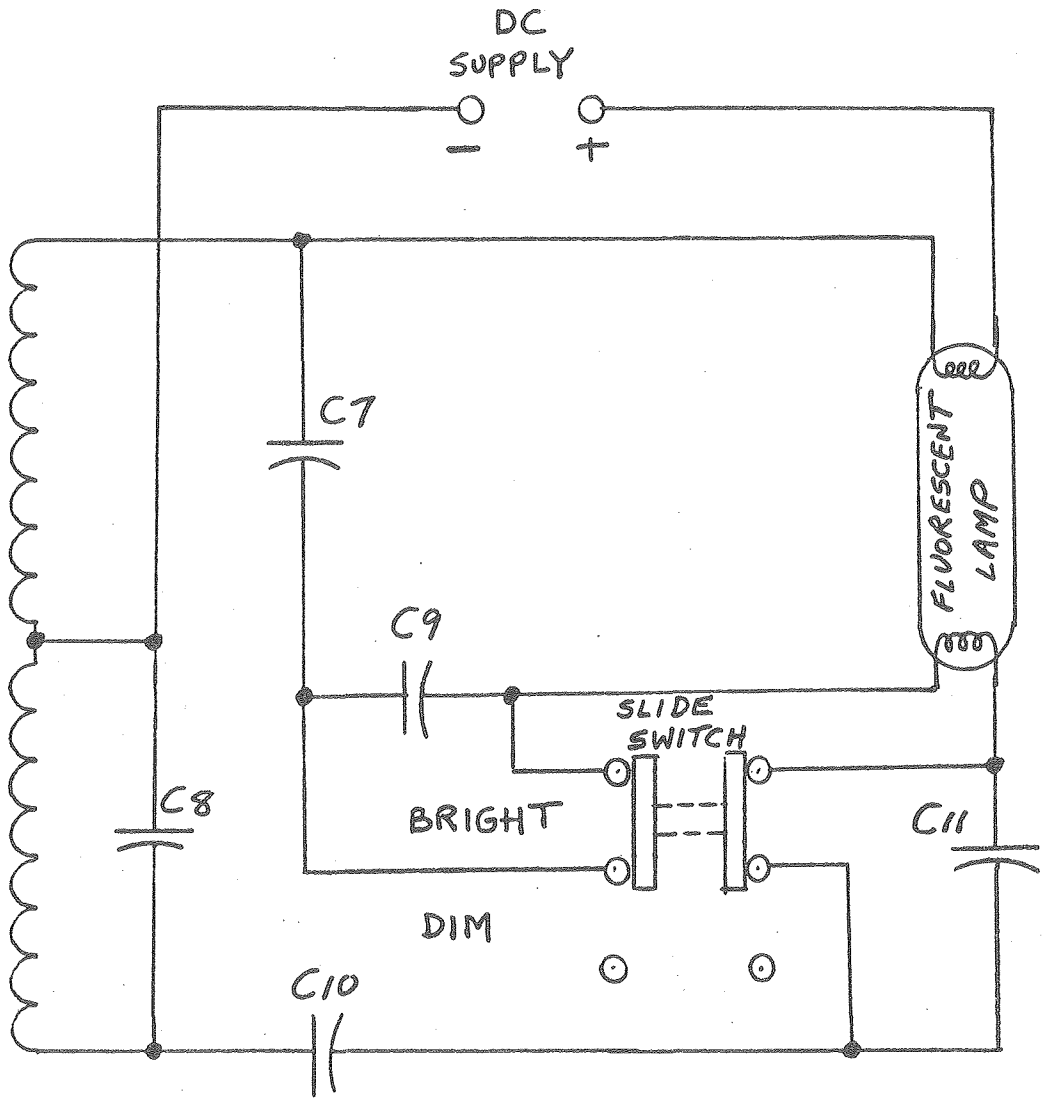

Fig. 2 Light Level Switch Circuit

When the switch is in the "bright" position, capacitor C11 is shorted out and series impedance in the lamp circuit is minimum. When the switch is in the "dim" position, C11 is in series with C10, thus increasing series impedance. The remaining switch-leg switches C9 in series with C7 so as to provide optimim lamp starting voltages at each position. Power and light outputs at each switch position are tabulated in Table 5.

Table 5 Light and Power Data With Two Level Switch

Switch	Variable	Ballast No. 2	3	4	5	8	Avr.
High	Light	662	632	635	672	676	655
Low	Light	272	287	289	290	306	289
Ratio H/L	Light	2.43	2.20	2.20	2.32	2.21	2.27
High	Input Watts	42.5	42	40	44	40.5	41.8
Low	" "	18.0	18.5	18	19	18	18.3
Ratio H/L	" "	2.36	2.27	2.22	2.32	2.25	2.28
High	Light/Watt In	15.6	15.1	15.9	15.3	16.7	15.7
Low	" " "	15.1	15.5	16.1	15.3	17.0	15.8
Ratio H/L	" " "	1.03	0.97	0.99	1.00	0.98	0.99
High	ARC Watts	32.2	31.3	30.7	32.5	30.4	31.4
Low	" "	11.8	11.6	11.5	12.0	11.6	11.7
Ratio H/L	" "	2.73	2.70	2.66	2.71	2.61	2.68
High	Light/Arc Watt	20.6	20.2	20.7	20.6	22.3	20.9
Low	" " "	23.1	24.7	25.1	24.2	26.4	24.7
Ratio H/L	" " "	0.89	0.82	0.82	0.85	0.84	0.84

These data show that both input power and integrated light output are attenuated 2.2 to 2.4 times in the low switch position. Lamp arc power is attenuated about 2.6 to 2.7 times.

The overall efficacy of ballast and lamp is affected very little by switch position. However, the lamp efficacy appears to increase about 11 to 18% with the switch in the low position.

1.2.10 Reduced Modulation

The ballast output voltage "carrier frequency" is modulated by 120 hertz power supply "ripple". This modulation or ripple can be reduced by additional hum filters in the DC power supply. The 10 inch ballast has inherently low modulation. If filter capacitance were reduced in order to check the effect of modulation, the circuit would become unstable. Therefore, it was necessary to introduce a different type of high frequency ballast. Tests were run on our new dual-40 ballast modified to drive a 10 inch circline lamp. Some tests by Lawrence Berkeley Laboratory, using our dual-40 modified ballasts, are tabulated in Table 6.

Table 6. Modulation Data

	Light	Efficacy Input	Efficacy Lamp	Input to Ballast Volt	Amp	watts	P.F.	Input to Lamp Volt	Amp	watt	P.F.
Mod	1883	39.2	47.1	120	.452	48.0	.88	43.6	1.218	40.0	.75
Unmod	2040	44.8	51.2	120	.620	45.5	.61	48.1	.841	39.8	.98
Un/Mod	1.08	1.14	1.09	1.0	1.37	0.95	.69	1.10	0.69	1.00	1.31

The effect of removing "ripple" modulation by added filtering was to improve overall efficacy and lamp efficacy. Lamp power factor was increased but overall power factor was decreased. Light output was increased. Input power decreased while lamp power was unchanged.

1.2.11 Functional Limitations of 10" Circline Ballast

The principal difficulty has to do with filament current on starting. In starting at the low level setting, the filament current is so low, that the lamp starts more like instant start than rapid start. Instant starting mode for the particular cathode structure leads to an expectation of short lamp life. With this design, filament current cannot be increased as an independent parameter -- a major circuit change would be necessary.

Also, although the light per watt efficacy of the present circuit is better than conventional ballasts, our work on another program indicates that increased efficacy is possible with a different circuit approach.

1.3 TESTS

1.3.1 Wave Form Test

Study of wave forms is a very important part of development and manufacture of electronic ballasts. Modern cathode ray oscilloscopes and voltage divider probes are used along with power line isolating transformers when required.

Fig. 3 shows typical waveforms of transistor voltage and current, lamp voltage and current, and input current.

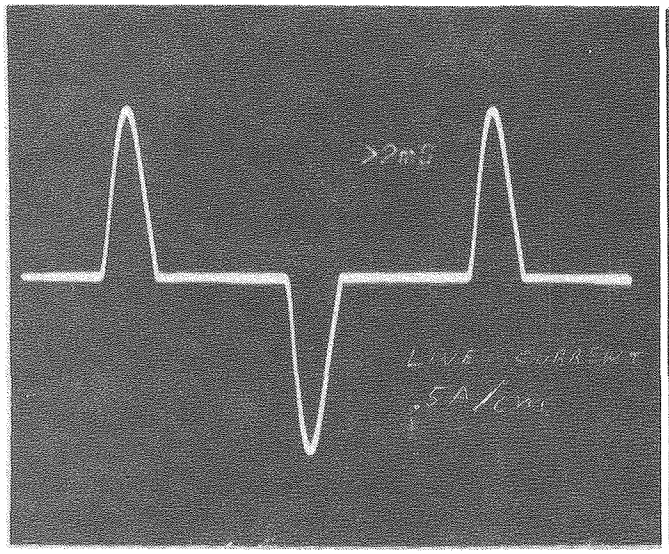

XBB 8010-11497

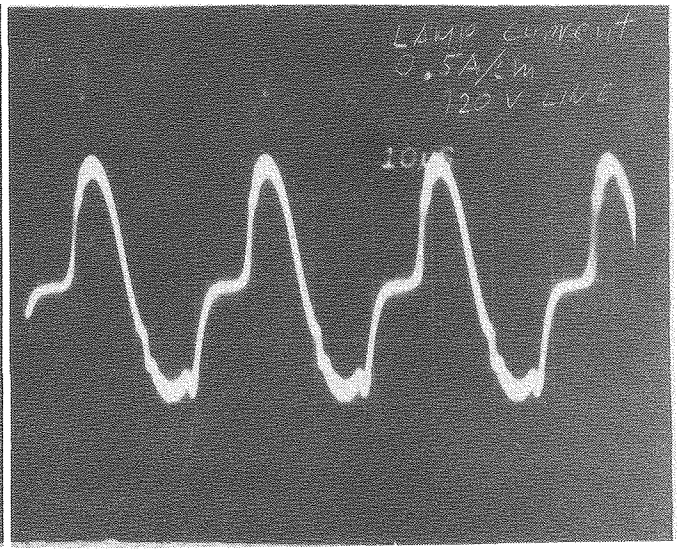

XBB 8010-11498

Input Line Current: 0.5 A/cm
Time: 2.67 ms/cm (60 Hz)

Lamp Current: 0.5 A/cm
Time: 10 microsec/cm

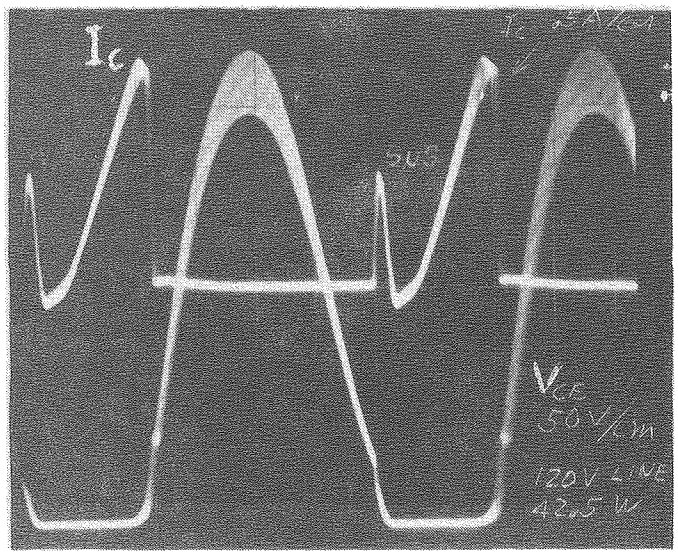

XBB 8010-11499

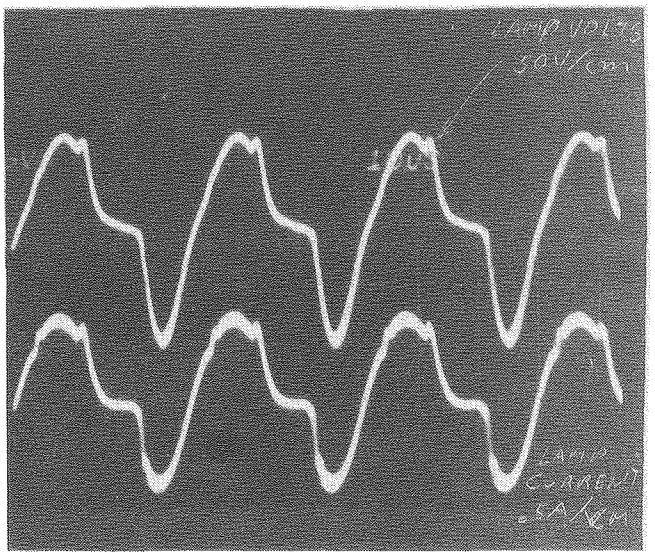

XBB 8010-11500

Switching Transistor
Vce: 50 V/cm Ic: 0.5 A/cm
Time: 5 microsec/cm

Top: Lamp Volts: 50 V/cm
Bottom: Lamp Current: 0.5 A/cm
Time: 10 microsec/cm

Fig. 3. Wave Form Characteristics, EETech 10-inch Circline Ballast
1/17/80

1.3.2 Arc Watts Measurement

The arc referred to is the gaseous electrical discharge in the fluorescent bulb.

Fig. 4 is a circuit diagram which shows the method developed by EE Tech to measure "arc" watts of a fluorescent lamp. Resistance voltage dividers are used to obtain average voltage drop between the two filaments. A current transformer with ferrite toroidal core was developed which has two primary windings, one for each terminal into a lamp filament. The secondary winding feeds the current terminals of the watt meter. The two primary windings totalize the arc current into the lamp and at the same time cancel the filament loop current from the measurement. The average voltage drop and current are combined in an electronic watt meter which thus reads arc power in watts.

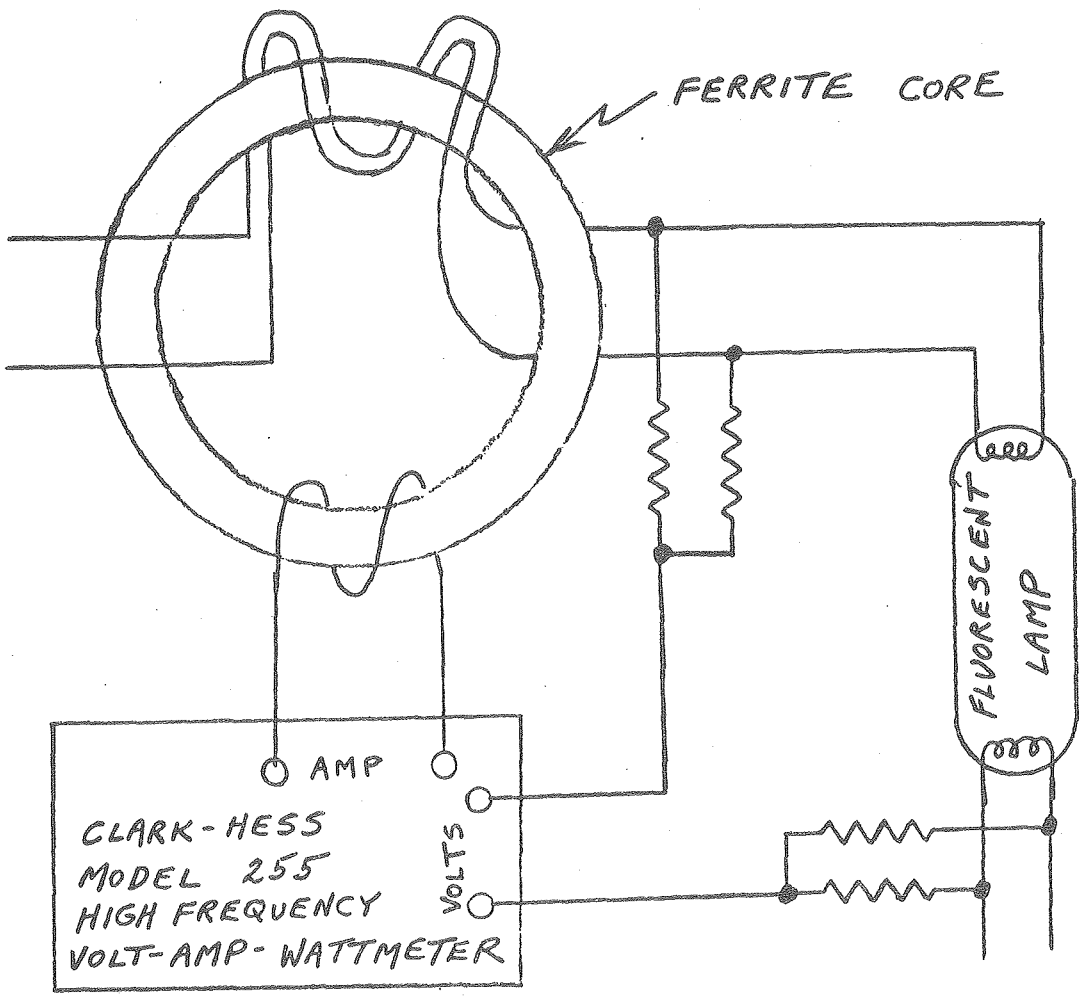

FIG. 4. EETech Circuit for Arc Watts Measurement

1.3.3 Integrated Light Output

Light meters have been used for spot readings at the surface of fluorescent lamps. Mounting brackets or supports are used sometimes to obtain comparative readings at a fixed distance from a lamp.

In addition, a new photometric chamber was developed and constructed patterned after some of the novel features of the integrating light cylinder at the Lawrence Berkeley Laboratory. The EETech chamber will accomodate circlines up to 16 inches diameter as well as 40 watt straight lamps. A calibration comparison was initiated with the General Electric Lighting Laboratory using a preconditioned certified 40 watt straight cool white lamp as a reference standard.

1.3.4 Starting Endurance Tests

Ever since production was started on 8 and 12 inch circline ballasts, EETech has been conducting starting-endurance tests with a cycle of 3 minutes on and 3 minutes off. Since 10 inch lamps have not been available in production quantities, no realistic endurance tests have been completed.

Mr. J. H. Campbell has suggested that a more realistic test schedule would be 50 minutes on and 10 minutes off. Our 3 minutes on/ 3 minutes off schedule would then seem to be an accelerated life test.

1.3.5 Wall Loading Data

Wall loading refers to the voltage-current characteristic of a fluorescent lamp. Saturation effects may be noted at overvoltages due to limitations of the fluorescent coating on the inner wall of the glass tube. These saturation effects may be evident when there is a large amount of modulation, when peak light is relatively large in comparison to average light.

The data in Table 7 when plotted on Fig. 5, shows very little saturation at arc current up to 732 ma. on a 10 inch circline. Higher arc currents were not possible with our high frequency power supplies. Foot Candle measurements were made with a portable General Electric F.C. meter positioned opposite the lamp connector and not moved between measurements.

Table 7. Wall Loading Data on 10 Inch Circline

Line		Lamp			Foot
Volts	Watts	Watts	Volts	Amp	Candles
88	32	24.0	56	.442	210
98	36	27.2	53	.520	230
108	40	30.0	50	.602	245
120	44	32.5	49	.673	259
128	48	35.0	48	.732	272

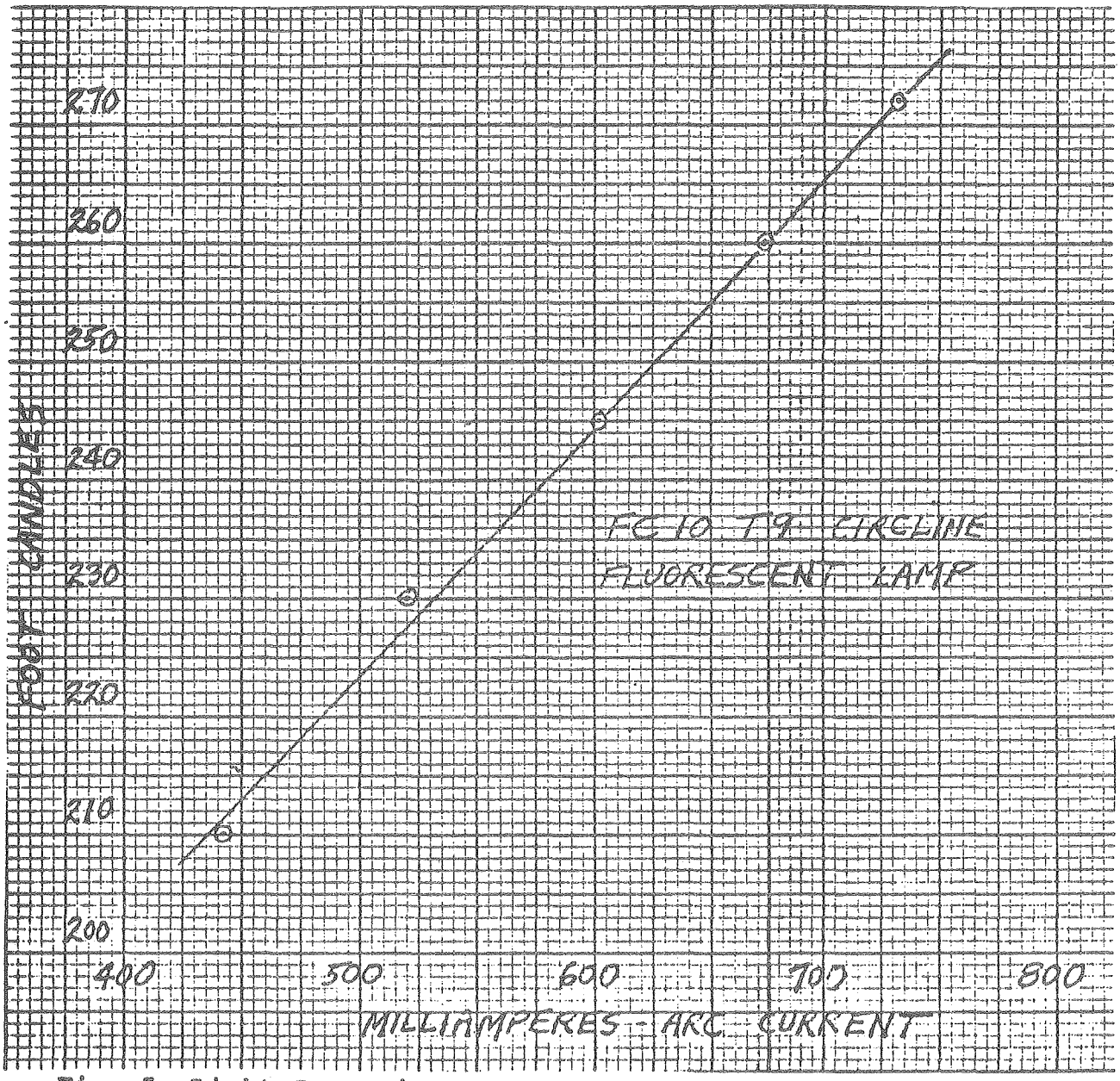

Fig. 5. Light Intensity vs. Lamp Current, 10" Circline

APPENDIX A

EE TECH PROTOTYPE MODEL

SCREW BASE 10" CIRCLINE

The following report provides a summary of two tests conducted on the EE Tech 10" screw base circline prototype lamp designed by EE Tech as a replacement for incandescent lamps of the 100 and 150 watt types.

The objective of this development is to provide an optimized circline fluorescent lamp adapted for direct replacement of a conventional 150-watt incandescent lamp in residential applications.

The first test conducted at EE Tech, Baldwinsville, N.Y. was designed to obtain lamp and ballast electrical characteristics and relative light output compared to the G.E. 10", Circlite screw base lamp which is now on the market.

Table I presents the data obtained on a lamp calibrated in the sphere at G.E. Nela Park. An accurate relative light comparison could not be made between the G.E. 60 Hz screw base design and the EE Tech prototype because the G.E. unit is a modular design with the lamp and starter integrally connected in the lamp frame and therefore the calibrated lamp could not be used in both units. However, an approximation was made by adjusting the readings to the 100 hours rating as shown. Light output readings were obtained in the Light Box built according to the plan outlined in Fig. 4 of the report "Plans For the Test Station and Recommended Tests". The Light Box is designed to provide relative light readings on calibrated lamps for use in determining lamp lumen output with the lamp only in the box and the ballast outside. Used in this way the light box will provide reasonably good correlation with the sphere and becomes a valuable and inexpensive aid in ballast design. When comparing two complete units with different size ballasts mounted on the channel, a large integrating sphere is needed, so for this part of the test it is recommended that the system lumens and system lumens per watt be obtained by E.T.L. or a lamp manufacturers Sphere for accurate results.

System Electrical Characteristics

Starting

As mentioned in the early stages of this development, the cathodes in the 10" circline are of the high output type and require a minimum preheat current of 0.8 amps to provide proper emission temperature to insure normal lamp life. Table I shows the starting current produced by the prototype varies between 0.633 and 0.678 amps at the high setting and 0.550 to 0.614 amps at the low setting for various line voltages. During the test it was noted that when the switch was set in the low position, a blue glow occurred before the cathode hot spot was formed at all line voltages and at 108 line volts the lamp stayed in the ionizing stage for 45 seconds before the hot spot formed. The blue glow is a visual indication of severe sputtering at the cathode and blackening of the lamp ends and short lamp life usually result. (See report on "L.B.L. Life Tests, Analysis and Recommendations dated March 8, 1979.)

It is recommended that the circuit be modified to provide a minimum of 0.8 amps. To determine the effect of the present preheat conditions, an accelerated starting test of about 6 lamps and ballasts with a schedule of 3 minutes on, 3 minutes off should give an early indication of the problem. Both high and low settings should be tried.

Ballast Characteristics

Regulation of light output over the line voltage is good with the EE Tech ballast +5% -10%. Ballast efficiency is much lower than expected due to the relatively high ballast loss of about 11 watts. This amounts to 35% of the watts delivered to the lamp. If this can be improved by changing the transformer core material and transformer design it will enhance the value of the product from the standpoint of system efficiency. As it stands now the system efficiency is dependent on gains in lamp efficacy due to high frequency operation.

Reading Lamp Test

In order to determine what the consumer is getting in illumination levels with an energy efficient system compared to incandescent, a typical portable lamp used for reading was equipped in my lab with several systems. Table II shows the results of this test.

The reading lamp used on 8" harp to hold the shade which is 16" wide. Foot candle readings were taken at various distances from the base of the portable lamp at table level with a cosine, color corrected light meter. Each set of readings was taken at the four quadrants to show the light distribution at the distances from the base in each quadrant. The three EE Tech units were oriented in the socket so the lamp holder and ballast case were in the same position for each unit. The average values were then compared with 100 watt and 150 watt incandescent lamps using each as 100% in two columns. The 10" EE Tech ballast was highest in each comparison, 24% higher than the 750 hour 100 watt but fell short in the comparison with the 750 hour 150 watt lamp. The 150 watt 2500 hour lamp is shown in the data but is not considered because of its low use and it is not recommended by D.O.E. because of its low efficiency.

By knowing the input wattage of each ballast, the footcandle level per watt can be calculated. This is the consumers efficiency measurement.

John H. Campbell
for EE Tech.

EE TECH - 10" CIRCLINE SCREW BASE DESIGN

GENERAL ELECTRIC 10" CIRCLITE SCREW BASE DESIGN

(Date of Test 1/16/80 at Baldwinsville, N.Y.)

	Line V	Line A-R.M.S. A-P.	Line W	Ballast Eff.	Line P.F.	D.C. V	Freq. KHZ.	Lamp V	Lamp A-W	Rel Light	Rel LPW	Start A	Start Time High Low	% Eff.
EE TECH Prototype	120	.562	42.5	73	.63	165	34.5	50.0	.632	1202	28.3	.660	2 Sec	99
		1.50							31.0			.570	4 Sec	
	130	.542	44.8	74	.63	180	29.0	47.0	.688	1255	28.0	.678	2 Sec	103
									33.0			.614	4 Sec	
	108	.566	38.5	72	.63	148	29.0	51.0	.55	1121	29.1	.633		97
									27.8			.550	No Start	
Starting		7.7P												

Components (R.M.S. except where peak is shown)

	TR2P	C_1	C_5	C_7	C_8	C_{10}	R_3	R_4	R_6	R_7	R_9	R_{10}	Sec.
	Ece				RMS	RMS							Peak
	Ebb				Peak	Peak							O.C.
	380	104	10.3	50	155	283	5.2	3.6	7.6	9.8	3.9	5.4	294
Starting	430		4.3	360	220	400							350
	0.8											RMS	215

	V	A	W	P.F.	**Rel.Light	*** Rel. Light	Rel. L.P.W.	
G.E. Circlite 10"	120	.690	44.0	.53	1406	1265	28.7	100
Circline Lamp	130	.804	50.0	.48	1504	1353	27.1	100
0 Hour Readings	108	.562	36.5	.60	1223	1100	30.1	100

Note: The Relative Light Values For The EETech Prototype Have Been Reduced by 3% To Approximate 100 Hr. Ratings From The Estimated 25 Hours On The Calibrated Lamp.#28910-10

*Compared to G.E. Circlite

**As Measured at 0 Hours

***Reduced by 10% to Approximate 100 Hr. Rating

Calibrated lamp rating at 60 Hz; 0 hours;

Lamp V	Lamp A	Lamp W	Lumens
61	0.66	35.7	1808

TABLE II

READING LAMP TEST CIRCLINE FLUORESCENT AND INCANDESCENT LAMPS

Footcandle Level

Quadrant and Distance From Lamp Base

Lamp	6" 1	6" 2	6" 3	6" 4	10" 1	10" 2	10" 3	10" 4	14" 1	14" 2	14" 3	14" 4	18" 1	18" 2	18" 3	18" 4	22" 1	22" 2	22" 3	22" 4	Ave. 5-positions	Percent 150W Inc.	Percent 100W Inc.
EE Tech 8"	45	56	52	38	40	47	45	38	29	32	35	27	18	19	19	18	13	13	13	12			
Ave.	48				42				31				18				13				30	50	81
EE Tech 12"	67	65	63	74	63	54	63	63	40	40	47	45	23	27	34	27	11	16	20	14			
Ave.	67				61				43				28				15				43	71	116
EE Tech 10"	71	66	68	87	57	57	66	68	40	38	52	47	22	27	38	34	11	15	26	30			
Ave.	73				62				44				30				20				46	77	124
G.E. Circlite 10"	65	61	65	75	61	52	63	65	44	41	44	42	29	26	30	30	19	16	18	19			
Ave.	66.5				60				43				29				18				43	71	116
100W Incand. 750 Hr. Life 1750 Lumens	52	58	40	52	45	57	50	50	32	42	40	35	22	31	30	28	14	20	22	20			
Ave.	50				50				37				28				19				37	61	100
150W Incand. 750 Hr. Life 2780 Lumens	92	100	72	95	75	80	82	80	53	60	62	60	38	42	48	41	27	30	32	30			
Ave.	89				79				59				42				30				60	100	162
150W Incand. 2500 Hr. Life 2300 Lumens	74	83	60	79	62	66	68	66	44	50	51	50	31	35	40	34	22	25	26	25			
Ave.	74				65				50				35				25				50	83	135

APPENDIX B

OPERATING PRINCIPLE OF FLYBACK INVERTER

The schematic circuit diagram of the inverter used on the 10 inch circline ballast is shown on Fig. C-1. Transistor Q2 is a power switch which alternately connects and disconnects the primary (terminals 1 and 2) of the transformer to the DC supply. During the time that the primary is connected to the supply, current builds up linearly in the magnetizing inductance of the transformer, storing energy therein. When the current reaches the proper level, the switch opens, and the current , modified by the turns ratio, is transferred to the secondary circuit.

The secondary circuit, a series RLC circuit with the lamp acting as R, rings through part of one sine wave cycle before the switch Q2 closes again. In this way, the lamp current extracts a major portion of the stored energy from the transformer. The sequential transfer of energy: from the supply to the transformer, then from the transformer to the lamp, accounts for most of the power energizing the lamp. A significant amount of power is also transferred directly when the switch first turns on. At this time the "transformer action" rather than inductance is significant and current flows in both the primary and secondary windings until the voltage on C10 (or C10 and C11) matches, through the turns ratio, the DC supply voltage. The time during which direct flow of power occurs is on the order of 2 microseconds.

Turn-off of Q2 is a function of two conditions:

1. As the current rises in Q2, the emitter impedance, consisting of R11, causes the emitter voltage to rise.

2. The Q2 base voltage is clamped by Q1 so that it cannot rise above a level determined by the base network of Q1. Therefore, as the emitter current in Q2 rises to a region which causes the clamp to operate, current flows out of the base of Q2, turning it off quickly.

The time waveforms of primary current, lamp current and collector to emitter voltage are shown in Fig. B-1.

In order to obtain a further understanding of the action of the circuit, it is useful to consider a two dimensional state diagram, as shown in Fig. B-2. All voltage, current, inductance, and capacitance values are referred to the primary winding of the transformer at terminals 1 and 2.

It is desirable to scale the state diagram so that it has equal energy axes; i.e., one inch on the horizontal current scale should represent the same energy stored in the inductance as one inch on the vertical voltage scale would represent stored in the capacitor.

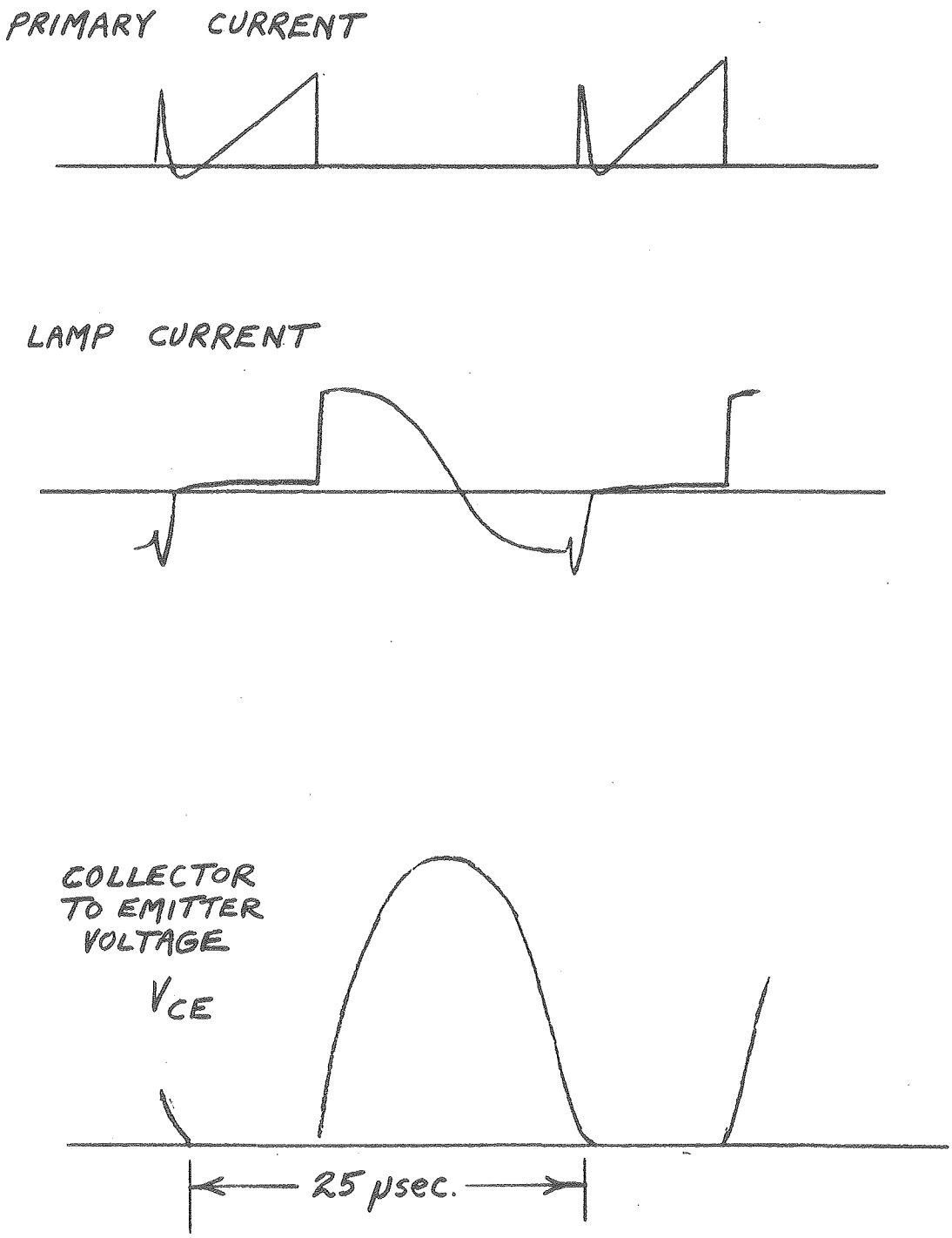

FIG. B-1. WAVEFORMS FOR FLYBACK INVERTER

FOLD

CONT ON SHEET SH NO.

DRAWING NO.

UNLESS OTHERWISE SPECIFIED USE THE FOLLOWING:—

APPLIED PRACTICES	SURFACES	TOLERANCES ON MACHINED DIM	
		FRACTIONS	DECIMALS
	✓	±	±

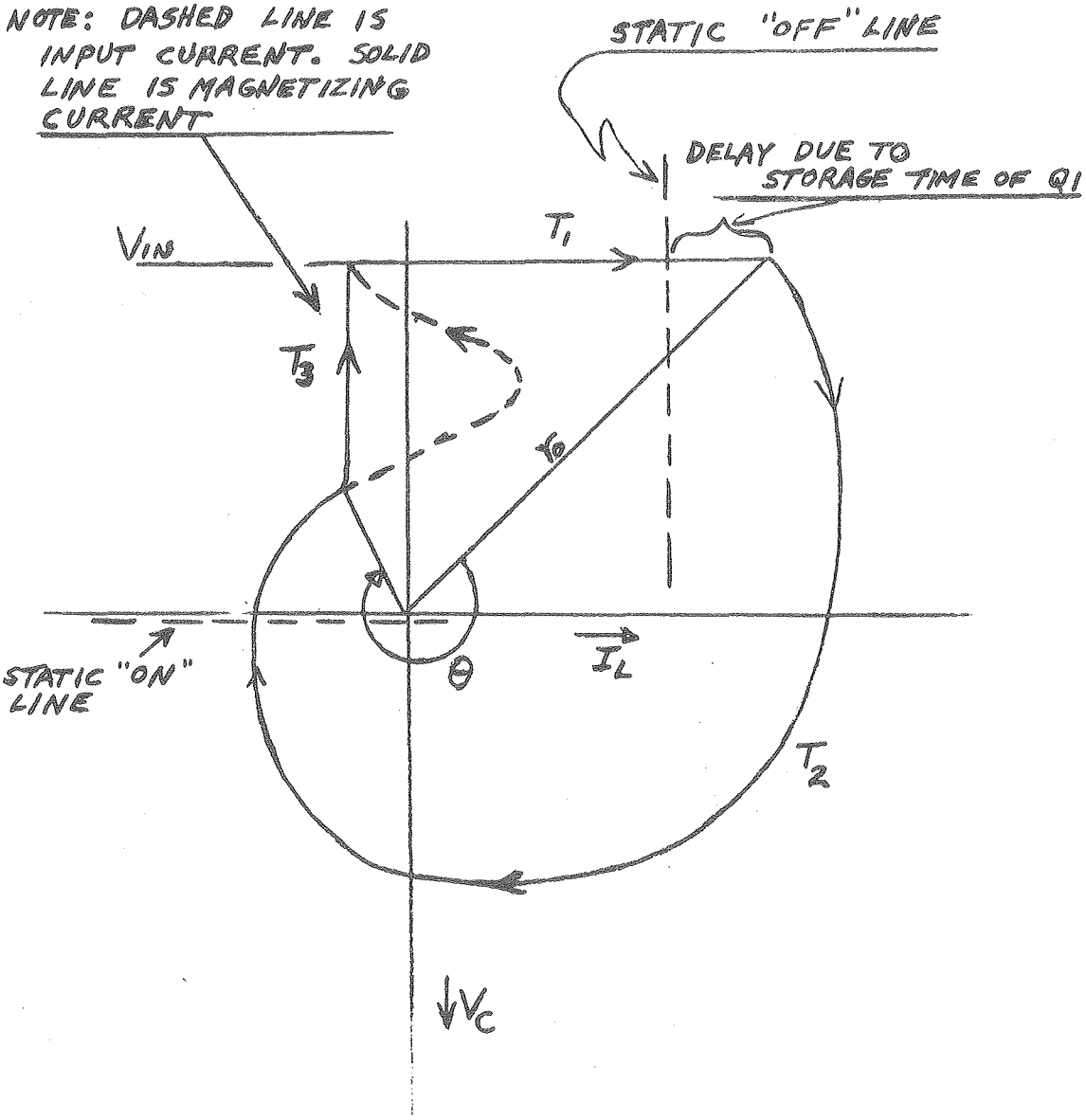

FIG. B-2. STATE DIAGRAM FOR RUNNING INVERTER

FF-803-P (2-73) PRINTED IN U.S.A.

FOLD

The relationship between scales would be as given in Equation 1:

$$\text{Volts/inch} = \sqrt{L/C} \times \text{Amperes/inch} \qquad (1$$

If this is done, segments of the trajectory for which no diode or transistor current flows will be arcs of a spiral. The time for such segments will be:

$$T = \theta \times \sqrt{LC} \qquad (2$$

where θ is in radians. Also, the radius of the spiral will go as:

$$\text{radius} = r_0 \times e^{\frac{-R}{2L} t} \qquad (3$$

where R is the lamp resistance referred to the primary.

Switch Q2 is "on" during T3 and T1. During T2, the RLC circuit of the secondary coasts through the major portion of one natural sine wave cycle.

The static "on" line is determined by the base-emitter drop of Q1 plus the voltage drops across diodes D12 and D13 plus other second order effects. It must be at a level below zero for oscillation to begin.

The "off" line may be moved to the left by the signal through R7. This is necessary to prevent excessive voltage on Q2 during start up of the lamp. See the state diagram, Fig. B-3, for a graphical explanation of the action.

Ten trips around the diagram are shown, although the circuit may reach stable operation in more or fewer trips. After Q2 turns "off" at A, the trajectory is controlled by the small capacitor C8. If the trajectory was not interrupted by the conduction of D10, and therefore the addition of C5 to the current path, the voltage would rise to V1 which would exceed the breakdown voltage of Q2. In fact, if the switching point remained at A, the voltage would eventually rise to V1 as C5 became charged through the diode. However, as the charge on C5 approaches the level V2, the switching point is moved back to B, so that the trajectory goes through V1 repeatedly until the lamp ignites.

CONT ON SHEET SH NO.
DRAWING NO.
UNLESS OTHERWISE SPECIFIED USE THE FOLLOWING:—
APPLIED PRACTICES | SURFACES | TOLERANCES ON MACHINED DI
FRACTIONS | DECIMALS
± | ±

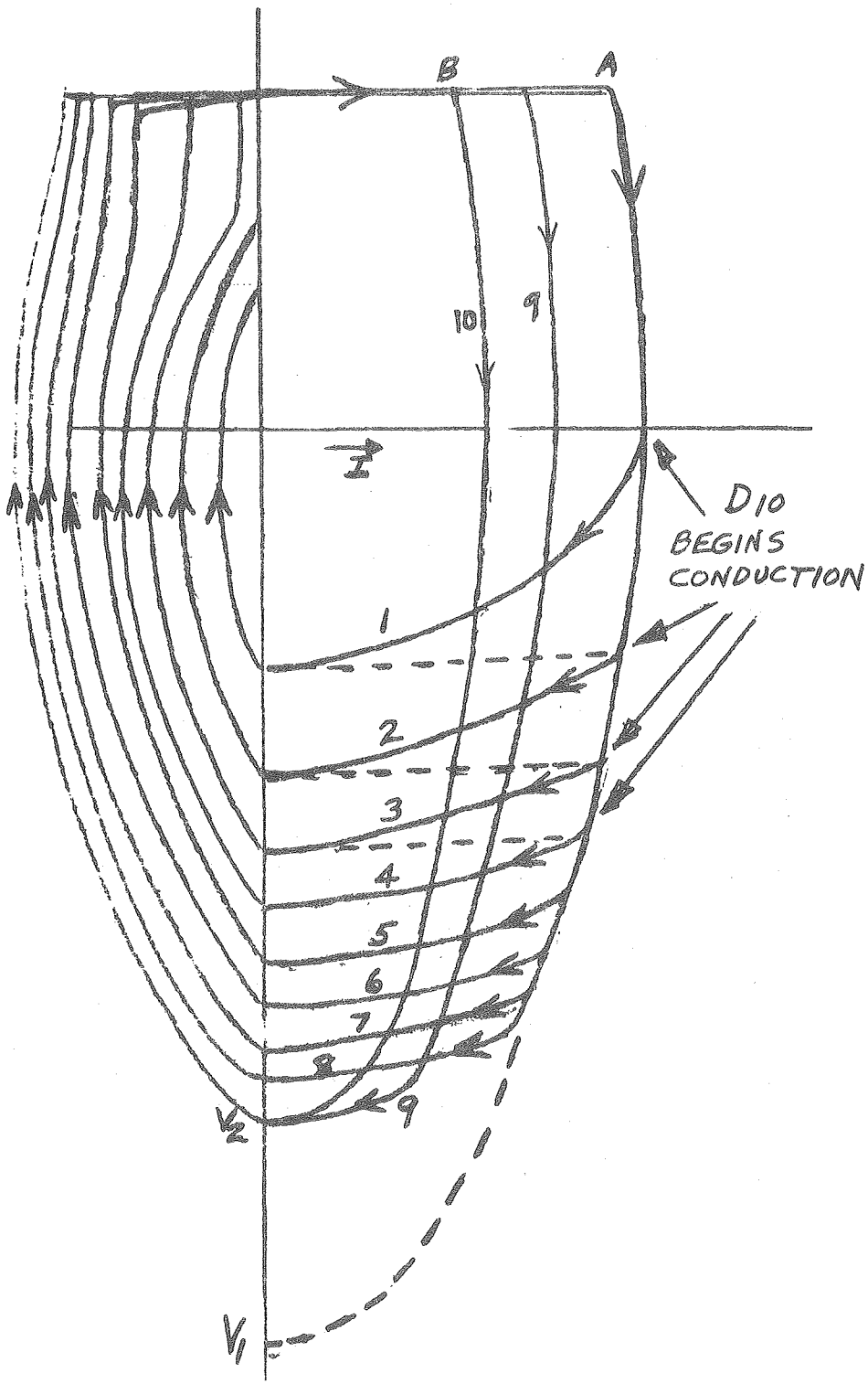

FIG. B-3. STATE DIAGRAM FOR START-UP

FF-806-P (4-72) PRINTED IN U.S.A.

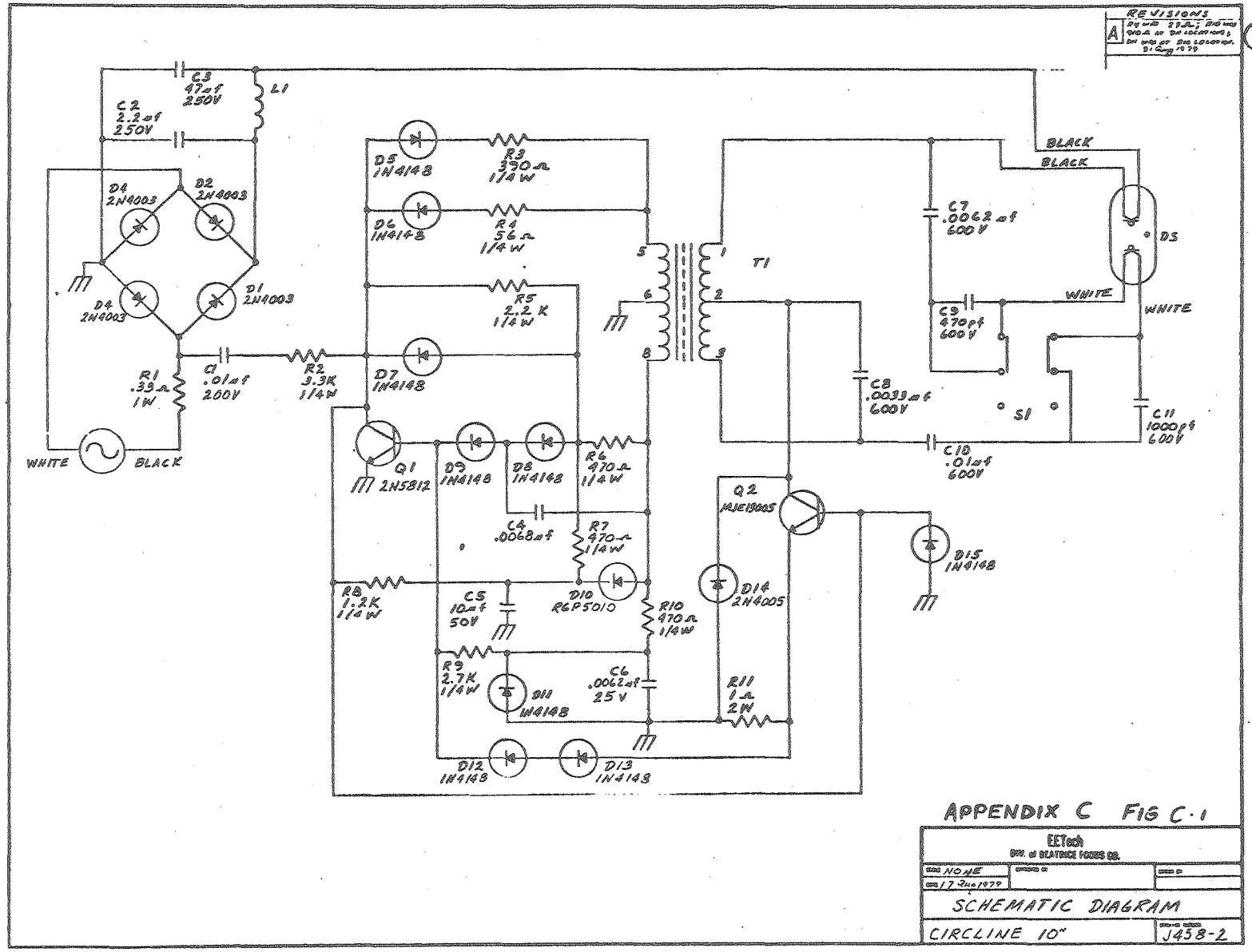

APPENDIX C FIG C-1

EETech
DIV. of BEATRICE FOODS CO.

SCALE NONE
DATE 17 Aug 1979

SCHEMATIC DIAGRAM

CIRCLINE 10"

DRAWING NUMBER J458-2

This report was done with support from the United States Energy Research and Development Administration. Any conclusions or opinions expressed in this report represent solely those of the author(s) and not necessarily those of The Regents of the University of California, the Lawrence Berkeley Laboratory or the United States Energy Research and Development Administration.

0 0 0 0 4 5 0 2 2 9 4