LBL-11580 c.2

Lawrence Berkeley Laboratory
UNIVERSITY OF CALIFORNIA

RECEIVED
LAWRENCE
BERKELEY LABORATORY
MAY 22 1981
LIBRARY AND
DOCUMENTS SECTION

Engineering & Technical Services Division

Presented at the IEEE Particle Accelerator Conference,
Washington, D.C., March 11-13, 1981

AUTOMATIC TUNING OF THE LBL BEVALAC TRANSFER LINE

H. Pines and F. Selph

March 1981

TWO-WEEK LOAN COPY

This is a Library Circulating Copy
which may be borrowed for two weeks.
For a personal retention copy, call
Tech. Info. Division, Ext. 6782

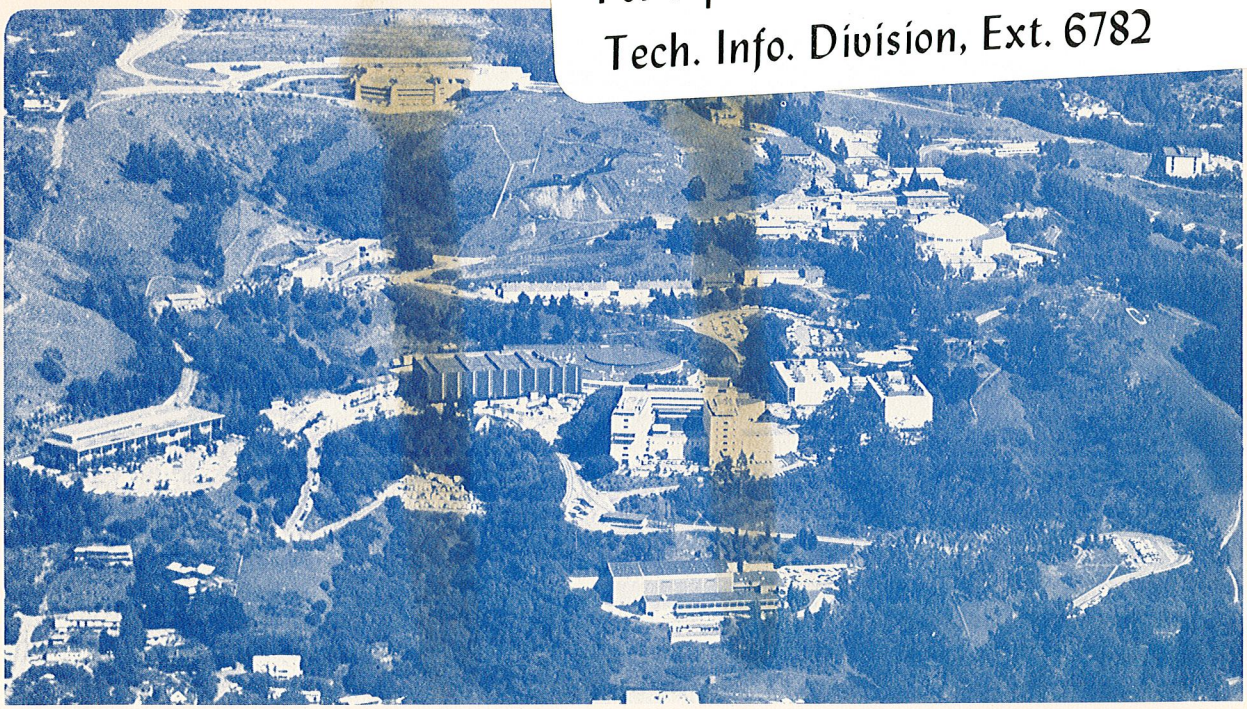

LBL-11580 c.2

Prepared for the U.S. Department of Energy under Contract W-7405-ENG-48

AUTOMATIC TUNING OF THE LBL BEVALAC TRANSFER LINE[1]

H. Pines and F. Selph[2]

Summary

Automatic tuning of a beam transport line has been accomplished successfully with the Bevalac control computer. Both steering and focusing corrections are made. New magnet currents are computed from equations governing beam optics in a real-time simulation of the beam line. This approach requires iteration although it converges quite rapidly. Computer automatic tuning is comparable to the most time efficient manual tuning operation.

Introduction

The LBL Bevalac transfer line transports the 8.5 MeV/A heavy ion beam from the SuperHILAC to the Bevatron. The transfer line is ~260 meters long and receives two beam pulses/second from the SuperHILAC. One pulse every 4-6 s is used for Bevatron injection; the remainder are used to check tuning of the line. Steering and focusing of the beam is performed on a station-to-station basis with dipole and quadrupole magnets located at each station. Each station also contains a nine-segment Faraday cup for monitoring the beam position and profile. The transfer line consists of 15 such stations containing a total of about 50 control magnets.[3]

The system is designed to be tuned by human operators interfacing to the hardware through a computer network. A new ion from the SuperHILAC must be tuned up at least once a day. This tuning task requires a minimum time of one-half hour, and typically extends beyond one hour. Occasional retuning is necessary in order to preserve maximum transmission. Because of the extra pulses, this retuning can be done without interfering with the accelerated Bevatron beam.

In order to unburden operators to perform other pressing functions, it is highly desirable to place this tuning task under automatic computer control. Development of any automatic tuning program becomes feasible when all relevant magnet control and beam monitoring parameters are computer data based. This is the case for the Bevalac control network where changes in magnet currents are actuated by changing corresponding values in the data base. Changes in these data base values can be effected by operator control knob settings or by commands sent from other computer programs. This paper will describe the development of just such a program for the purpose of automatic tuning of the LBL Bevalac transfer line.

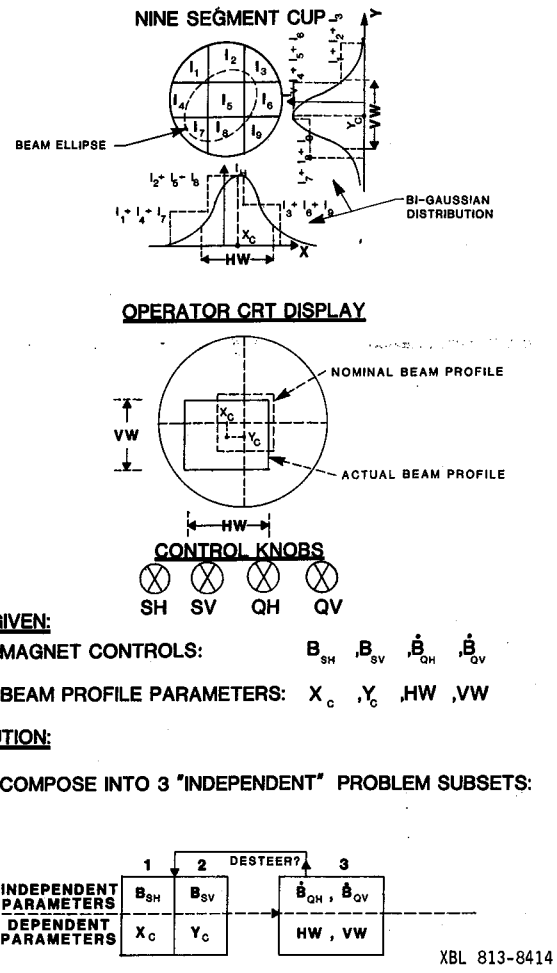

Fig. 2: Outline of the transfer line station tuning problem. Nine-segment cup readings are processed and displayed on operator CRT as beam position and profile parameters. Controls for B_{SH}, B_{SV}, $\dot{B}_{QH}$, $\dot{B}_{QV}$ are magnetic field strengths for the horizontal and vertical dipole steering and quadrupole focusing magnets, respectively.

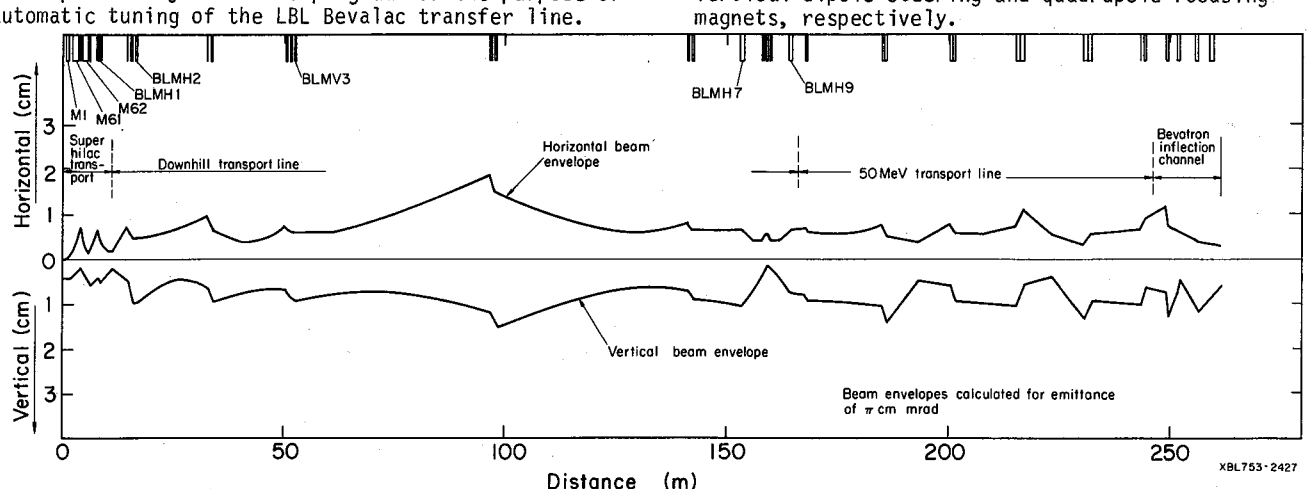

Fig. 1: Design calculations for the beam transmission envelope through the Bevalac transfer line. Markings on upper margin show placement of magnet control stations.

Tuning - A Problematic Description

Fig. 1 shows the design calculations for the Bevalac transfer line beam transmission envelope corresponding to a nominal beam emittance of π cm-mr. For maximum beam transmission through the line, the task of any tuning algorithm is to reproduce this transmission envelope as faithfully as possible. In the Bevalac transfer line this requires adjusting the steering and focusing magnets at any station n to achieve the desired beam profile being monitored at the next downstream station n+1. This process is repeated station by station down the line.

The human operator is therefore required to solve the tuning problem outlined in fig. 2. The operator must adjust the four control knobs corresponding to the horizontal and vertical steering and focusing magnet currents to match the actual beam profile "box" to the nominal "box" displayed on the CRT terminal. These box dimensions represent the major and minor axis lengths of the elliptical beam profile being monitored on the nine-segment Faraday cup. In fig. 2, these axis lengths are derived from a bi-Gaussian fit to the raw cup data.

There is a 1:1 correspondence between the horizontal or vertical steering magnet current and the respective horizontal or vertical beam centroid position. The horizontal and vertical focusing magnets, however, mutually affect the height and width of the beam. The tuning problem is thus decomposed into three fairly independent problem subsets: two independent 1x1 parameter steering problems and a more complex 2x2 parameter focusing problem. Focusing is best achieved when the beam is first centered symmetrically about its longitudinal axis. Since mechanical misalignments can result in the desteering of the beam during focusing, the operator may need to resteer the beam, and then refocus it if necessary. Tuning is therefore the ordered problem: steer, focus, steer, focus, etc.

Tuning Methodologies--Rationale for Selection

Insight into the development of any automatic tuning strategy is gained by studying existing tuning procedures employed by human operators. Fig. 3 shows the operator-computer-machine interfaces in a feedback control loop format. The system, consisting of the

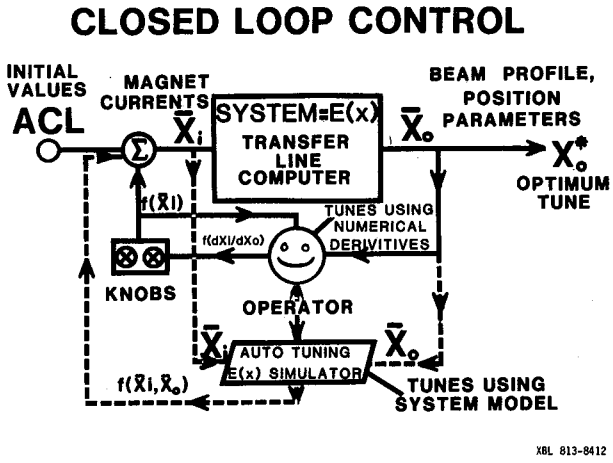

Fig. 3: Transfer line tuning methodologies represented in a feedback control loop format.

transfer line and the control computer, transforms the magnet knob current settings (system inputs) into actual beam profile and position parameters (system outputs). In practice, operators turn magnet control knobs and visually monitor the resultant effect upon the beam. During this procedure, they are essentially computing partial derivatives relating the knob settings to the beam display, and adjusting knobs accordingly, until the desired tune is achieved.

One possible tuning strategy is therefore to mimic the operator in computing real-time numerical derivatives and then employing this information in some mathematical gradient search scheme, e.g. Newton-Raphson. This strategy suffers from two inhibitions to rapid convergence. First, the speed of convergence for any one iteration of an automatic tuning algorithm is limited both by the data sampling rate and by the data processing time. For the 2 Hz Bevalac transfer line, data collection time will dominate the time necessary to process the data. Three beam pulse samples requiring a minimum of 1.5 s are needed to construct the real-time partial derivatives for a 2x2 parameter system. Second, a gradient search algorithm is much less efficient in a highly nonlinear solution space, e.g. near a beam waist condition, and requires more real-time iterations for convergence.

Our approach is based upon real-time computer modeling and simulation of the beam in the transfer line. This approach requires iteration, although convergence to a solution is rapid. This method requires that the beam be sampled only once per search iteration and is therefore 2-3 times faster than computing real-time numerical derivatives.

A Station-to-Station Tuning Algorithm

Fig. 4 outlines the steps for developing the station-to-station steering/focusing algorithm using an idealized model of the Bevalac transfer line. A

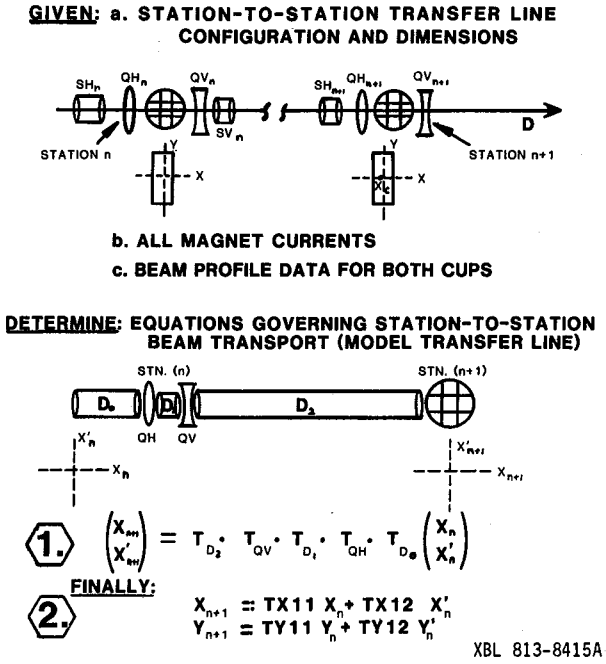

Fig. 4: Development of equations governing beam optics in an idealized model of the transfer line.

model of the transfer line is first constructed using simple beam optical elements such as drift spaces, and quadrupole and dipole magnetic fields. Utilizing known transfer line dimensions and magnet specifications, these elements can be quantified in transfer matrix form. These elementary matrices describe input/output relationships for a particle of given angle and displacement (X_0, X_0'). Equations governing station-to-station beam optics are derived by multiplying these elementary matrices.

In linear approximation, all particles traveling through a uniform dipole magnetic field experience identical changes in angle and displacement. Therefore, for purposes of steering, the entire beam can be represented by the single ray describing the path of the particle arriving at the beam centroid (X_C, Y_C) at the station n+1 cup. Given an initial set of steering magnet currents corresponding to dipole fields $(B^{\circ}_{SH}, B^{\circ}_{SV})$ at station n, magnet lengths (L_X, L_Y), beam rigidity $H\rho$, and beam position data at the station n+1 cup, eq. 1 in fig. 4 can be solved in closed form to obtain new steering magnet dipole fields:

$$B_{SH} = B^{\circ}_{SH} - H\rho/L_X[X_C/(0.5*L_X*T_{X11}+T_{X12})]$$

$$B_{SV} = B^{\circ}_{SV} - H\rho/L_Y[Y_C/(0.5*L_Y*T_{Y11}+T_{Y12})].$$

Convergence to the desired solution is achieved in one to two iterations.

It is necessary to solve the system of eqs. 2 in fig. 4 for the desired beam focusing at station n+1. The beam ellipse, however, cannot be fully defined since the only available data are the horizontal and vertical envelope displacements at stations n and n+1. Nevertheless, it is possible to treat ellipse-to-ellipse transport by a single ray which defines envelope-to-envelope transport of the ellipses. This method is:

(a) Fit a particle trajectory, called a "tuning ray", through the beam envelope measurements at stations n and n+1. This requires solving the system of eqs. 1 for X'(n), X'(n+1) given X(n), X(n+1) as measured by plunging both cups. It is essential that this trajectory lies within the bounds of the actual station-to-station envelope profile, i.e. that this ray is an actual particle trajectory and not merely a mathematical idealization.

(b) Compute the quadrupole magnet currents at station n in order to match the "tuning ray" displacement at station n+1 with the desired beam envelope profile. This requires solving the system of eqs. 2, using a numerical optimization routine, for the implicit quadrupole field variables.

(c) Repeat steps (a) and (b) for the modified beam profile and the new quadrupole magnet currents. Iteration is necessary to the extent that the tuning ray does not exactly coincide with actual envelope-to-envelope transport.

Testing the Focusing Algorithm

The tuning concept can be illustrated using the beam optics program BELIN.[4] This program allows mathematical modeling and simulation of idealized beam transport lines for a variety of input specifications. Fig. 5 is graphical output generated by the BELIN code. The program has computed and plotted the horizontal and vertical envelope displacements for a beam of emittance π cm-mr, in a simulation of stations 2, 3, and 4 of the Bevalac transfer line. The horizontal and vertical tuning rays were fit to match the envelope displacements measured at cups 3 and 4. Note that the tuning rays very nearly coincide with their respective envelope longitudinal profiles. This can always be expected when the longitudinal envelope profile does not exhibit a pronounced waist in the inter-station drift space. In the event of a pronounced waist, an "inverted" tuning ray is fit to pass through the negative value of the measured displacement at the upstream cup and through the usual positive displacement at the downstream cup. Fig. 5 shows the status of the beam envelopes and their respective tuning rays after the optimizer routine has solved for the station 3 quadrupole magnet currents which "focus" the tuning rays to their target values at cup 4. The tuning rays have in fact been focused. The beam envelope has also been focused to within 10% of the target profile. After a second iteration, the beam envelope is focused to an accuracy of 1%.

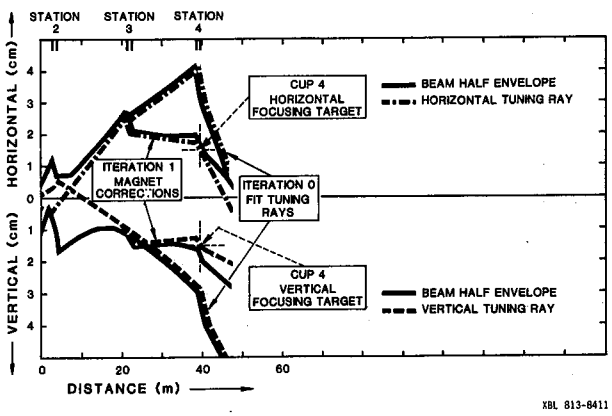

Fig. 5: Computer simulation of the focusing algorithm when applied to the tuning of Bevalac station 4 using station 3 control magnets.

Implementing the Algorithm--Results

The tuning algorithm has been successfully tested on the Bevalac transfer line. Automatic tuning of the line from Bevalac stations 2 through 14 requires between 10-15 minutes. For particularly noisy beams subject to pronounced pulse-to-pulse variation, the cup readings must be averaged over five pulses and the time to tune increases to 15-30 minutes.

The program is being upgraded to contend with logical contingencies encountered during testing. For example, in the event of focusing divergence, the program must deduce the precise cause and then invoke the proper corrective action, e.g. whether to re-average noisy data or to perform a tuning ray inversion. In another example, station focusing on the nominal beam profiles is sometimes difficult because these nominal values were computed for a specific value of beam emittance which currently cannot be measured. Fortunately, the focusing algorithm described in this paper can be adapted to calculate beam emittance in the transfer line.

References

[1]This work was supported by the Director, Office of Energy Research, Office of High Energy and Nuclear Physics, Nuclear Science Division, U.S. Dept. of Energy under Contract No. W-7405-ENG-48.

[2]Lawrence Berkeley Laboratory, Univ. of California, Berkeley, California, 94720.

[3]R. Avery et al., IEEE Trans. on Nucl. Sci., NS-22, No. 3 (1975) 1529-1532.

[4]F. Selph, S. Magyary, "Input Data for ModComp BELIN", May 1976.