LBL-12444
Preprint c.2

Lawrence Berkeley Laboratory
UNIVERSITY OF CALIFORNIA

Materials & Molecular Research Division

LIBRARY
DOCUMENTS

Submitted to Physical Review A

MEASUREMENTS OF SPONTANEOUS EMISSION COEFFICIENTS $A(7P_{1/2} - 7S_{1/2})$ AND $A(6D_{3/2} - 7P_{1/2})$ IN ATOMIC THALLIUM

L. Hunter, P. Bucksbaum, and E. Commins

March 1981

TWO-WEEK LOAN COPY

This is a Library Circulating Copy which may be borrowed for two weeks. For a personal retention copy, call Tech. Info. Division, Ext. 6782

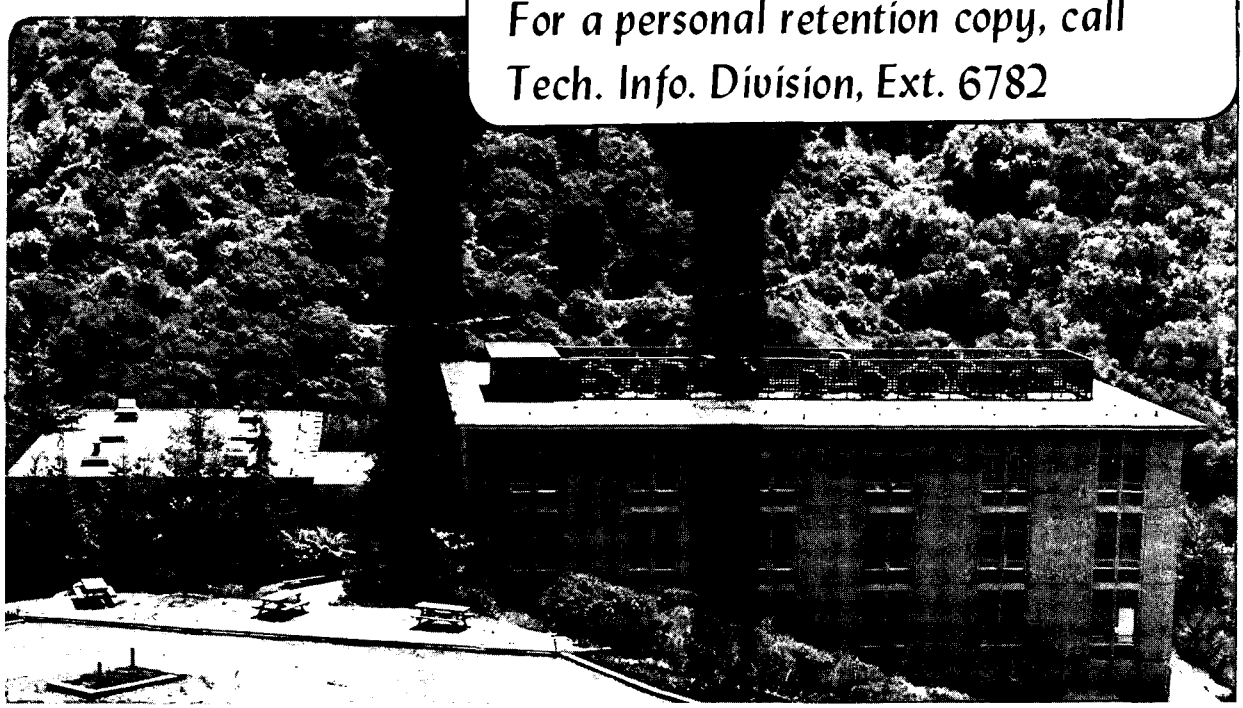

LBL-12444 c.2

Prepared for the U.S. Department of Energy under Contract W-7405-ENG-48

DISCLAIMER

This document was prepared as an account of work sponsored by the United States Government. While this document is believed to contain correct information, neither the United States Government nor any agency thereof, nor the Regents of the University of California, nor any of their employees, makes any warranty, express or implied, or assumes any legal responsibility for the accuracy, completeness, or usefulness of any information, apparatus, product, or process disclosed, or represents that its use would not infringe privately owned rights. Reference herein to any specific commercial product, process, or service by its trade name, trademark, manufacturer, or otherwise, does not necessarily constitute or imply its endorsement, recommendation, or favoring by the United States Government or any agency thereof, or the Regents of the University of California. The views and opinions of authors expressed herein do not necessarily state or reflect those of the United States Government or any agency thereof or the Regents of the University of California.

Measurements of Spontaneous Emission Coefficients $A(7P_{1/2} - 7S_{1/2})$ and $A(6D_{3/2} - 7P_{1/2})$ in Atomic Thallium.

L. Hunter, P. Bucksbaum, and E. Commins

Physics Department, University of California,

Berkeley, California 94720

and

Materials and Molecular Research Division

Lawrence Berkeley Laboratory, Berkeley, California 94720

Abstract

We report the first measurements of A coefficients involving the $7^2P_{1/2}$ state of atomic thallium. We obtain the values $A(6D_{3/2} - 7P_{1/2}) = (5.97 \pm .78) \times 10^5\ \mathrm{sec}^{-1}$ and $A(7P_{1/2} - 7S_{1/2}) = (2.26 \pm .10) \times 10^7\ \mathrm{sec}^{-1}$. These values are used to refine the predictions of the parity nonconserving circular dichroism for the $6P_{1/2} - 7P_{1/2}$ forbidden M1 transition in thallium. The new theoretical value obtained using the Weinberg-Salam model with $\sin^2\theta = .23$ is $\delta = (2.4 \pm .8) \times 10^{-3}$ and is in good agreement with our recent measurement $\delta = (2.8 \pm {}^{1.0}_{0.9}) \times 10^{-3}$.

This research was performed under the auspices of the Chemical Sciences Division, Office of Basic Energy Sciences of the U.S. Department of Energy under Contract W-7405-ENG-48.

1) Introduction

The $6^2P_{1/2} - 7^2P_{1/2}$ forbidden M1 transition in thallium is of considerable interest in connection with experimental observation of parity nonconservation due to neutral weak currents.[1,2,3] The transition is nominally forbidden M1 with amplitude M, but there exists an additional parity violating E1 amplitude $\mathcal{E}_P$, which leads to circular dichroism $\delta \simeq + \frac{2\mathrm{Im}\mathcal{E}_P}{M}$. M is known from an interference experiment[4] which utilizes an external electric field E. One measures $-\frac{2M}{\beta E}, \frac{4M}{3\alpha E}$, in the absorption $6^2P_{1/2} \to 7^2P_{1/2}$. Here β is the Stark amplitude for linear polarization of absorbed radiation perpendicular to the applied electric field, given by:

$$\beta = \frac{e^2}{9}\sum_{nS} R_{7P,nS}\, R_{nS,6P}\left(\frac{1}{E_{6P}-E_{nS}} - \frac{1}{E_{7P}-E_{nS}}\right) + \frac{e^2}{9}\sum_{nD_{3/2}} R_{7P,nD_{3/2}}\, R_{nD_{3/2},6P}\left(\frac{1}{E_{7P}-E_{nD_{3/2}}} - \frac{1}{E_{6P}-E_{nD_{3/2}}}\right) \tag{1}$$

where $E_{6P} = 6^2P_{1/2}$ energy, etc, $R_{7P,nS} = \langle 7^2P_{1/2}|r|n^2S_{1/2}\rangle$, etc., and r is the electron radial coordinate. Also α is the Stark amplitude for linear polarization parallel to the electric field:

$$\alpha = \frac{e^2}{9}\sum_{nS} R_{7P,nS}\, R_{nS,6P}\left(\frac{1}{E_{7P}-E_{nS}} + \frac{1}{E_{6P}-E_{nS}}\right) + \frac{2e^2}{9}\sum_{nD_{3/2}} R_{7P,nD_{3/2}}\, R_{nD_{3/2},6P}\left(\frac{1}{E_{7P}-E_{nD_{3/2}}} + \frac{1}{E_{6P}-E_{nD_{3/2}}}\right) \tag{2}$$

Since α,β have never been measured directly, the determination of M depends on a reliable calculation of these quantities.

Theoretical determination of the parity violating amplitude $\mathcal{E}_P$ also requires evaluation of an infinite sum involving similar radial matrix elements, as well as zero-range parity violating matrix elements:

$$\mathcal{E}_P = \sum_{nS} \frac{\langle 7P_{1/2}|E1|nS\rangle\langle nS|H_{PV}|6P_{1/2}\rangle}{E_{6P} - E_{nS}} + \frac{\langle 7P_{1/2}|H_{PV}|nS\rangle\langle nS|E1|6P_{1/2}\rangle}{E_{7P} - E_{nS}} \quad (3)$$

where the factors $\langle nS|H_{PV}|n'P\rangle$ are pseudoscalar and depend on the electron wave functions and their derivatives at the nucleus. The electric dipole terms of the sum may be expressed as

$$\langle nS_{1/2}|E1|n'P_{1/2}\rangle = e\langle nS|\hat{\varepsilon}\cdot\underset{\sim}{r}|n'P_{1/2}\rangle = \frac{e}{3} R_{nS,n'P} \ .$$

It is clear that accurate values of the radial matrix elements $R_{nS,n'P}$ and $R_{nD_{3/2},n'P}$ would improve the theoretical estimate of δ, α, and β.

The A coefficient between a $P_{1/2}$ state and either a $D_{3/2}$ or $S_{1/2}$ state may be expressed as:

$$A = \frac{4}{9} e^2 R^2_{\substack{nP,n'D\\n'S}} \left|E_{nP} - E_{\substack{n'D\\n'S}}\right|^3$$

The $7^2S_{1/2}$ and $6^2D_{3/2}$ states play a dominant role in the sums of eq'ns 1-3.[5] $A(7S_{1/2} - 6P_{1/2})$ and $A(6D_{3/2}-6P_{1/2})$ are already known.[6] We here describe measurements of $A(6D_{3/2} - 7P_{1/2})$ and $A(7P_{1/2} - 7S_{1/2})$. Using radial matrix elements implied from these rates, we have improved the theoretical estimate[5] of δ and have made a realistic assessment of the errors involved. In all of our measurements we employ Tl with the natural isotopic abundance (29.5% Tl^{203} and 70.5% Tl^{205}).

2) $7P_{1/2}$ Lifetime

The $7P_{1/2}$ lifetime was measured by the authors in collaboration with S. Chu and R. Conti in 1977, by observing the Hanle effect in the $7P_{1/2}$ state.

Circularly polarized laser light tuned to the $6P_{1/2} \rightarrow 7P_{1/2}$ transition at 292.7 nm travels along $\hat{x}$ in thallium vapor, as shown in fig. 1. An electric field $\vec{E}$ of 200 V/cm along $\hat{y}$ induces Stark electric dipole absorption amplitudes αE and βE. When the laser is tuned to the $F = 1 \rightarrow F' = 1$ hyperfine transition, interference between α and β amplitudes causes a polarization along $\hat{x}$:

$$P_x = \pm \frac{4\alpha\beta}{3\alpha^2 + 2\beta^2} \tag{4}$$

where $\pm$ refer to laser photon helicities ± 1. A weak magnetic field $\vec{B}$ along $\hat{y}$ causes P_x to precess in the $\hat{x}$-$\hat{z}$ plane at a rate $\omega = g_F \mu_0 B/\hbar$, where μ_0 is the electron Bohr magneton. Photomultipliers along $\pm z$ detect the left circularly polarized ($h = +1$) component of the $7S_{1/2} - 6P_{3/2}$ decay fluorescence at 535.0 nm. This fluorescence originates from cascade decays $7P_{1/2} \rightarrow 7S_{1/2} \rightarrow 6P_{3/2}$ or from conversion of resonantly trapped 377.6 nm radiation ($7S_{1/2} - 6P_{1/2}$), which forms an unpolarized background.

The cascade process dilutes the original polarization by a factor of six. An additional factor of two is lost because of resonance trapping, and the detected circular polarization is reduced by another factor of $\sim$1.25 because of imperfect polarization analysis.

It may be shown that the observed circular polarization is given by the formula:

$$\langle P_z \rangle_{535\ \mathrm{nm}} = \frac{b(a + a')}{(1 + a^2)(1 + a'^2)} \tag{5}$$

where

$$a' = \frac{eB}{2m_e c\ A(7S)_{TOTAL}} \quad , \quad a = \frac{eB}{6m_e c A(7P_{1/2})} \quad , \text{ and}$$

and $b = \frac{P_x}{12} \cdot$detection efficiency. In order to determine $A(7P_{1/2})$ we

measure $\langle P_z \rangle$ vs B. The overall scale factor b need not be known to determine A(7P). Only the shape of the curve and in particular the position of the maximum is important. From previous measurements[6]

$$A(7S)_{TOTAL} = (13.3 \pm 0.3) \times 10^7 \text{ sec}^{-1}.$$

The apparatus used in this experiment is shown in Fig. 2. The quartz thallium cell was designed for other purposes, and only one interaction region is used in the $7P_{1/2}$ lifetime measurement. The magnetic field increases linearly with coil current according to

$$B(\text{gauss}) = 0.88\ I\ (\text{amps})$$

and varies by less than 1% over the fiducial volume, as measured by a calibrated Hall probe. Data were taken at 13 magnetic field settings between 0 and 12 amperes. The laser helicity and $\vec{B}$ direction were frequently reversed, which reverses the sign of $\langle P_z \rangle_{535}$. The difference over the sum of the fluorescence signals observed in phototubes along ±z is equal to $\langle P_z \rangle_{535}$. (See Fig. 1.) The data are shown in Fig. 3. Each point has a statistical uncertainty of .0004.

Following eq. 5, the data were fit to the function:

$$f(I) = \frac{\gamma(z + .0582)I}{(1 + z^2I^2)(1 + (.0582)^2I^2)} \tag{6}$$

The fit parameters are: $z = .114 \pm .001$

$$\gamma = .0466 \pm .0001,$$

with $\frac{\chi^2}{N - 1} = 1.1$. The errors in this measurement are due to A(7S) (3%), B (1%), and the statistical fit (1%). Combining these, we find:

$$A(7P_{1/2}) = (2.26 \pm .10) \times 10^7\ s^{-1}. \tag{7}$$

This may be compared to the theoretical values $A(7P_{1/2}) = 1.88 \times 10^7\ s^{-1}$,[5] and $A(7P_{1/2}) = 1.64 \times 10^7\ s^{-1}$.[7]

3) Determination of $A(6D_{3/2} - 7P_{1/2})$

We measure $A(6D_{3/2} - 7P_{1/2})$ by exciting the $6P_{1/2} - 6D_{3/2}$ transition and observing the ratio of the decay fluorescences at 378 nm and 353 nm. The A coefficient may be expressed in terms of this ratio and other better known rates in thallium:

$$A(6D_{3/2} \rightarrow 7P_{1/2}) = \frac{A(6D_{3/2} - 6P_{3/2})\ A(7S)_{TOTAL}}{\rho \times A(7S_{1/2} - 6P_{1/2})} - A(6D_{3/2} - 7P_{3/2}) \tag{8}$$

where $\rho = N_{353nm}/N_{378nm}$ is the observed photon number ratio corrected for detector efficiency. A schematic of the apparatus used in this measurement is shown in Fig. 4.

Light at 558 nm is generated using Coumarin 540 dye (Exiton Corp., 50 mg/ℓ methanol) in a flashlamp pumped pulsed laser.[8] An 80 percent reflecting output coupler is used to minimize shot-to-shot fluctuations. The power output is about 2 mj/pulse at a repetition rate of about 10Hz. The frequency is doubled in an INRAD AD*P crystal maintained at T = 100°C to produce the 277 nm light. The light is reflected into a sealed off quartz cell containing thallium vapor. The subsequent fluorescence, collimated by two one inch quartz f-1 lenses, is simultaneously observed by a Jarrel-Ash 1/2 meter monochromator with 3.0 mm slits viewed with an RCA 8575 Phototube, and an EMI 9780 phototube with a Baird 353 nm interference filter. The broadband acceptance of the monochromator is chosen to enhance light collection and minimize wavelength setting errors.

The signal sizes are digitized, stored, and analyzed with an on-line LSI-11 computer system. The monochromator is tuned back and forth between

378 nm and 353 nm while the phototube viewing 353 nm is used to normalize the signals. When observing 353 nm an optical attenuator is inserted before the monochromator slit to approximately equalize the observed light intensities between 353 nm and 378 nm. The normalized ratio of the signal in 353 nm with attenuator, to 378 nm without the attenuator, is then measured. Data were taken at thallium vapor densities between $10^{10} - 10^{11}$ cm^{-3}. These low densities are chosen to avoid resonance trapping of 277 nm and 378 nm light. In addition, measurements were made at different positions in the cell and from each of the two ground state hyperfine components. Data from all configurations agree very well, indicating that resonance trapping and background effects are of no significance. Calibration of the relative detection efficiencies of 378 nm and 353 nm with the optical filter is accomplished by replacing the thallium cell with an NBS calibrated 1000 W quartz-iodine lamp. The final value for ρ is

$$\rho = 77 \pm 4 \tag{9}$$

where the error is entirely systematic: 3% in the measurement, and 2% in the normalization. Using Eq'n (8), the measured values of A coefficients to $6P_{1/2}$ and $6P_{3/2}$ states, and a theoretical value[5] (with much larger fractional uncertainty) for the small A coefficient $A(6D_{3/2} \rightarrow 7P_{3/2})$, one obtains:

$$A(6D_{3/2} \rightarrow 7P_{1/2}) = (5.97 \pm 0.78) \times 10^5 \ s^{-1} \tag{10}$$

This may be compared with the theoretical values of 4.79×10^5 s^{-1} [5] and 4.41×10^5 s^{-1}.[7]

4) Determination of α, β, M, $\mathcal{E}_P$, and δ

In order to make the best estimate of α, β, M, $\mathcal{E}_P$ and δ we employ experimental numbers wherever available. Otherwise the results of calculations of reference (5) are used for the following reasons:

1) The dominant transition amplitudes which have not been measured involve transitions to the $7P_{1/2}$ state. The two measured values connecting the $7P_{1/2}$ state to the $6^2D_{3/2}$ and $7^2S_{1/2}$ state both are in better agreement with reference 5 than with other calculations.

2) It is difficult to estimate the contribution of the continuum and auto-ionizing states when the central-field potential is allowed to vary as a function of orbital angular momentum as is the case for reference 7. However, the Green's function technique employed in reference 5 allows one to calculate these contributions in a consistent way.

The A coefficients and radial matrix elements relevant to the calculation are listed in table 1. Fifteen percent uncertainties have been assumed for all radial matrix elements which have not been measured. Because of the high accuracy of the calculations of the hyperfine structure of the $6P_{1/2}$ and $7S_{1/2}$ states (which are very sensitive to the values of the wave function near the origin) we have assumed a ten percent uncertainty in the parity violating amplitudes $6P_{1/2} - nS_{1/2}$. However, we have assigned a fifteen percent uncertainty to the parity violating amplitudes $7P_{1/2} - nS_{1/2}$. In addition we have assumed that the contributions to α and β due to continuum and autoionizing $D_{3/2}$ states are overestimated by about thirty percent, as is suggested by the measurements of $6P_{1/2} - nD_{3/2}$ A-coefficients. A fifty percent uncertainty is assigned to these terms. All other continuum

and autoionizing sums have been assumed to be valid to thirty percent. The contributions of each intermediate state and its uncertainty in the calculation of α, β, and $\mathcal{E}_P$ are shown in table 2.

With the above assumptions one obtains the following values of α and β:

$$\alpha = (2.27 \mp .26) \times 10^{-5}\ \mu_0 \text{cm/V} \tag{11}$$

$$\beta = (1.80 \mp .14) \times 10^{-5}\ \mu_0 \text{cm/V} \tag{12}$$

$$\left(\frac{\alpha}{\beta}\right)_{\text{Theo}} = .79 \mp .11 \tag{13}$$

The theoretical value of (α/β) agrees quite well with the measured experimental ratio of $.84 \pm .05$.[4]

The new estimates of α and β change the calibration of the M1 experiment[4] and lead to a new value of the M1 amplitude:

$$M_{\text{exp}} = (-2.3 \mp .3) \times 10^{-5}\ \mu_0 \tag{14}$$

The new value of $\mathcal{E}_P$ is

$$\mathcal{E}_P = i(2.35 \mp .70)\ Q_W \times 10^{-10}\ \mu_0 \tag{15}$$

For $\sin^2\theta = .23$ and $Q_W = (1 - 4\sin^2\theta)Z - N \cong -117$ one then obtains a new theoretical estimate of δ:

$$\delta_{\text{Theo}} = \frac{2\text{Im}\mathcal{E}_P}{M} = (2.4 \mp .8) \times 10^{-3} \tag{16}$$

This is found to be in good agreement with the experimental value[2] of

$$\delta_{\text{exp}} = 2.8 \left(^{+1.0}_{-0.9}\right) \times 10^{-3}. \tag{17}$$

Direct measurements of α and/or β are very difficult to perform accurately, but they would provide useful tests of the foregoing analysis.

Acknowledgements

We thank S. Chu and R. Conti for their collaboration in the earlier stages of this work, and H. Susmann for assistance. This research was performed under the auspices of the Chemical Sciences Division, Office of Basic Energy Sciences, U.S. Department of Energy, under Contract W-7405-ENG-48.

References

1. R. Conti, P. Bucksbaum, S. Chu, E. Commins and L. Hunter. Phys. Rev. Lett. 42, 343 (1979).
2. P. Bucksbaum, E. Commins and L. Hunter. Phys. Rev. Lett. 46, 640, 1981
3. P. Bucksbaum, E. Commins, and L. Hunter. Phys. Rev. D (to be published).
4. S. Chu, E. Commins and R. Conti, Phys. Lett. 60A, 96 (1977).
5. D. Neuffer and E.D. Commins. Phys. Rev. A 16, 844 (1977).
6. A. Gallagher and A. Lurio. Phys. Rev. A 136, 87 (1964).
7. J.N. Bardsley and D.W. Norcross. J.Q.S.R.T. 23, 575 (1980).
8. S. Chu and R.W. Smith. Opt. Commun. 28, 221 (1979).

TABLE 1

	(5) A_{CALC} ($\times 10^7$ s^{-1})	A_{exp} ($\times 10^7$ sec^{-1})	(5)* R_{CALC}	R_{exp}*	fractional uncertainty in R
$6P_{1/2} \rightarrow 7S_{1/2}$	5.78	6.25 ∓ .31	294.1	305.8	.025
8	1.75	1.78 ∓ .16	91.5	92.3	.045
9	.777	.78 ∓ .10	51.8	51.9	.064
10	.412	-------	35.1	-----	.15
$7P_{1/2} \rightarrow 7S_{1/2}$	.244	.26 ∓ .31	26.0	29.3	.097
8	.338	--------	991.6	-1176.	.022
9	.127	--------	219.5	-----	.15
10	.064	--------	114.3	-----	.15
11	.038	--------	75.1	-----	.15
$6P_{1/2} \rightarrow 6D_{3/2}$	16.04	12.60 ∓ 1.0	-307.7	-272.7	.040
7	6.39	4.40 ∓ 0.5	-154.8	-128.5	.057
8	3.19	1.89 ∓ 0.3	-99.8	-76.8	.079
9	1.82	.98 ∓ 0.22	-71.9	-52.8	.112
10	1.14	.58 ∓ 0.15	-55.2	-39.4	.129
$7P_{1/2} \rightarrow 6D_{3/2}$	.0479	.0597 ∓ .0078	1321.4	1475.2	.065
7	.416	--------	-489.2	-----	.15
8	.270	--------	-254.2	-----	.15
9	.168	--------	-165.8	-----	.15
10	.099	--------	-120.0	-----	.15

* In these columns we employ units ($\hbar = c = m_e = 1$)

TABLE 2

Int. State	$\frac{R_{7P,nS}\,R_{nS,6P}}{E_{6P}-E_{nS}}$ ($\times 10^{11}$)	$\frac{R_{7P,nS}\,R_{nS,6P}}{E_{7P}-E_{nS}}$ ($\times 10^{11}$)	Int. State	$\frac{R_{7P,nD}\,R_{nD,6P}}{E_{6P}-E_{nD}}$ ($\times 10^{11}$)	$\frac{R_{7P,nD}\,R_{nD,6P}}{E_{7P}-E_{nD}}$ ($\times 10^{11}$)
$7S_{1/2}$	$+.561 \mp .019$	$-1.934 \mp .064$	$6D_{3/2}$	$+.478 \mp .037$	$+8.823 \mp .673$
$8S_{1/2}$	$-.097 \mp .015$	$-.823 \mp .129$	$7D_{3/2}$	$-.062 \mp .010$	$-.333 \mp .053$
$9S_{1/2}$	$-.011 \mp .002$	$-.052 \mp .009$	$8D_{3/2}$	$-.018 \mp .003$	$-.077 \mp .012$
$10S_{1/2}$	$-.004 \mp .001$	$-.015 \mp .003$	$9D_{3/2}$	$-.008 \mp .001$	$-.030 \mp .006$
$11S_{1/2}$	$-.002 \mp .001$	$-.007 \mp .001$	$10D_{3/2}$	$-.004 \mp .001$	$-.015 \mp .003$
All other $S_{1/2}$	$-.014 \mp .004$	$-.130 \mp .043$	All other $D_{3/2}$	$-.048 \mp .024$	$-.693 \mp .347$
TOTAL	$+.433 \mp .025$	$-2.961 \mp .151$	TOTAL	$+.338 \mp .045$	$+7.675 \mp .759$
	$\equiv S_6$	$\equiv S_7$		$\equiv D_6$	$\equiv D_7$

$$\beta = \frac{e^2}{9}(S_6 - S_7 + D_7 - D_6) = (+1.19 \mp .09) \times 10^{11} e^2$$

$$\beta = (+1.80 \mp .14) \times 10^{-5}\ \mu_0 \mathrm{cm/V}$$

$$\alpha = \frac{e^2}{9}(S_6 + S_7 + 2D_6 + 2D_7) = (+1.50 \mp .17) \times 10^{11} e^2$$

$$\alpha = (2.27 \mp .26) \times 10^{-5}\ \mu_0 \mathrm{cm/V}$$

	$\frac{\langle 7P_{1/2}\|E1\|nS\rangle\langle nS\|H_{PV}\|6P_{1/2}\rangle}{E_{6P}-E_{nS}}$ ($i \times 10^{-10}\ Q_W\ \mu_0$)	$\frac{\langle 7P_{1/2}\|H_{PV}\|nS\rangle\langle nS\|E1\|6P_{1/2}\rangle}{E_{7P}-E_{nS}}$ ($i \times 10^{-10}\ Q_W\ \mu_0$)
6S	$-.20 \mp .03$	$.63 \mp .13$
7S	$5.57 \mp .56$	$-1.76 \mp .27$
8S	$-1.77 \mp .38$	$.49 \mp .08$
9S	$-.23 \mp .05$	$.09 \mp .02$
10S	$-.08 \mp .02$	$.04 \mp .01$
All other S states	$-.43 \mp .13$	
TOTAL	$2.35 \mp .76$	

$$\mathcal{E}_P = i(2.35 \mp .76) \times 10^{-10}\ Q_W \mu_0$$

Note: All units are ($\hbar = m_e = c = 1$) unless otherwise noted

Figure Captions

Figure 1 Schematic of Hanle rotation experiment. The atomic polarization P_x precesses in the magnetic field $\vec{B}$.

Figure 2 Apparatus used to measure the $7P_{1/2}$ lifetime.

Figure 3 Hanle effect data

Figure 4 Schematic of the apparatus used to measure $A(6D_{3/2} - 7P_{1/2})$

X = AD*P doubling crystal

C = quartz cell with Tl vapor

L = 25 mm DIA f-1 quartz lenses

F = 353 nm interference filter

B = 277 nm laser beam

A = Removable optical attenuator

M = Monochromator

P1 Monochromator phototube

P2 Normalization phototube

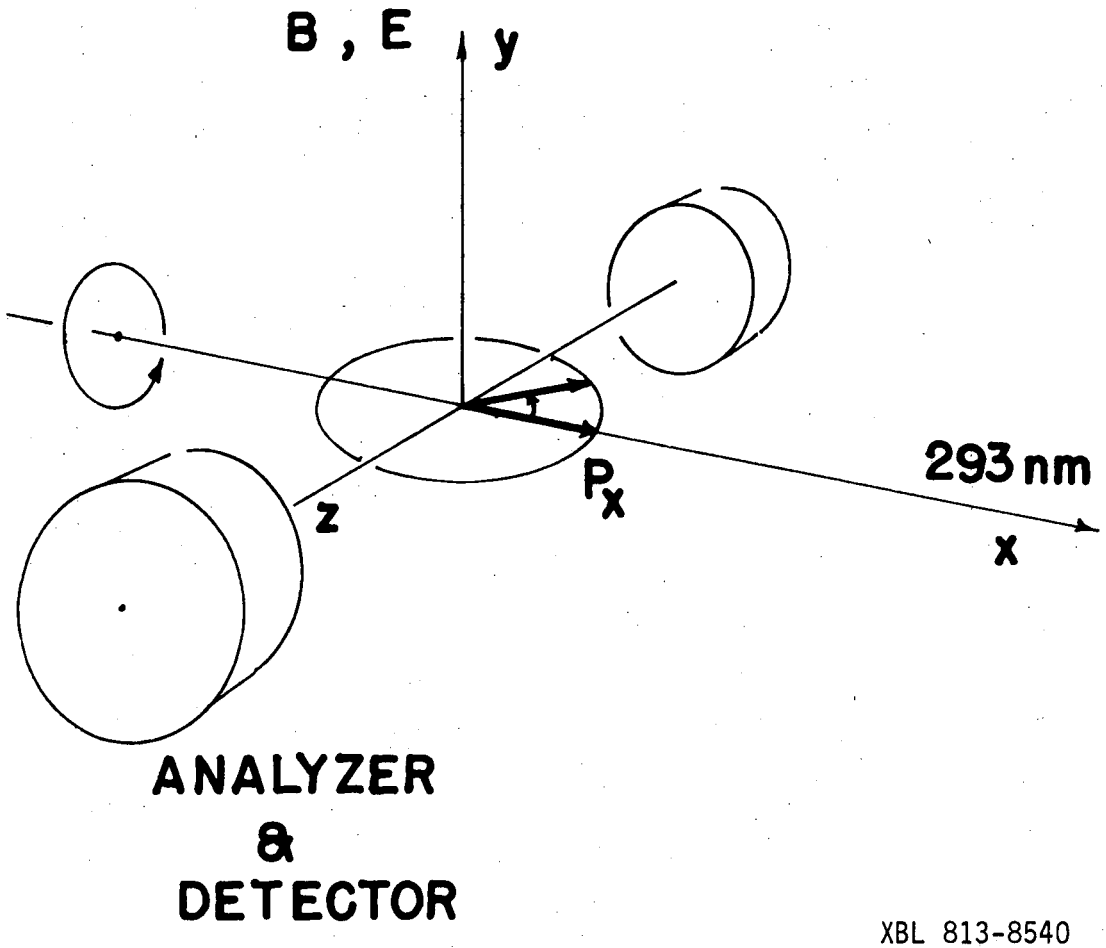

XBL 813-8540

Fig. 1

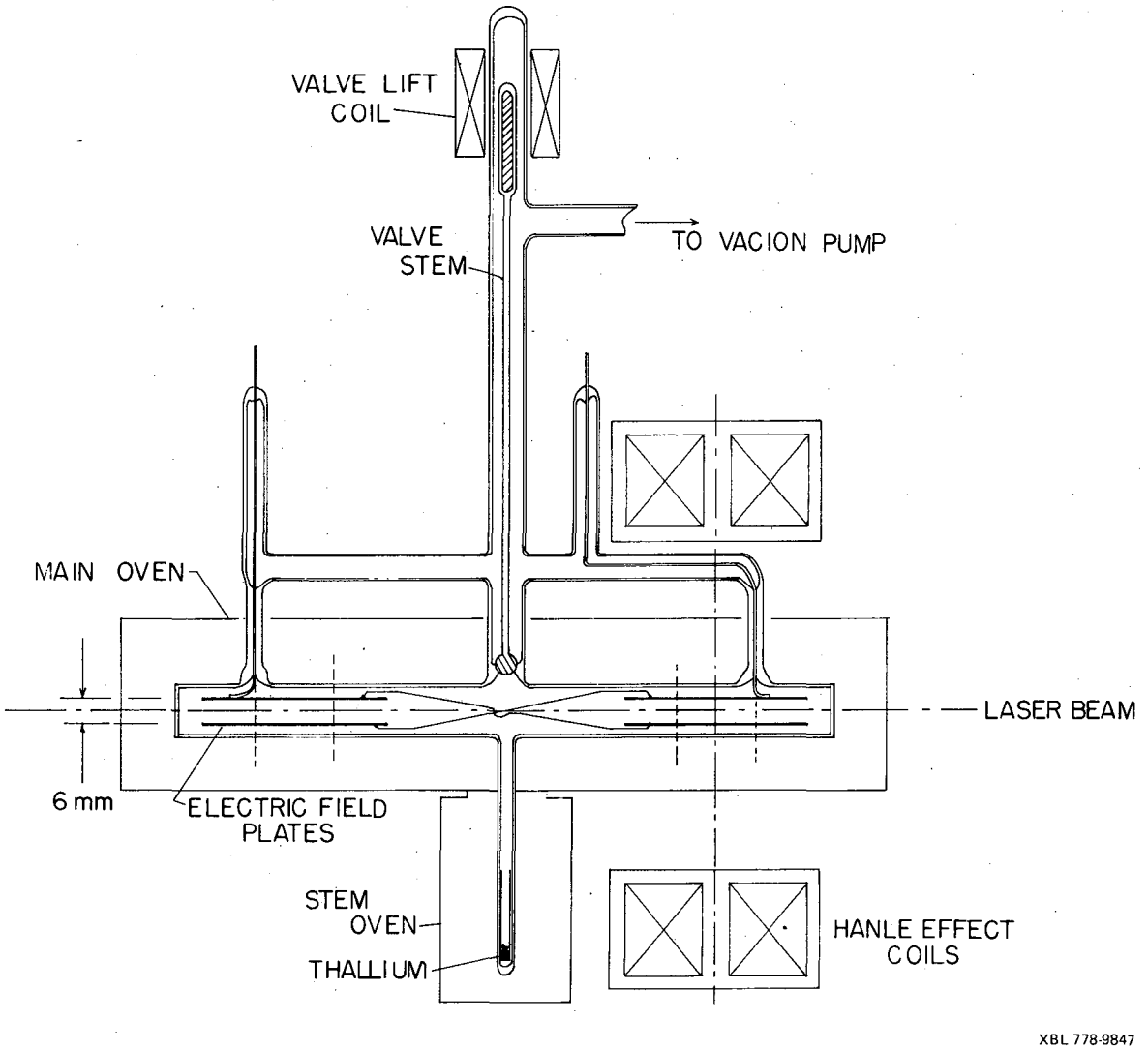
VALVE LIFT
COIL
VALVE
STEM
TO VACION PUMP
MAIN OVEN
LASER BEAM
6 mm
ELECTRIC FIELD
PLATES
STEM
OVEN
THALLIUM
HANLE EFFECT
COILS
XBL 778-9847

Fig. 2

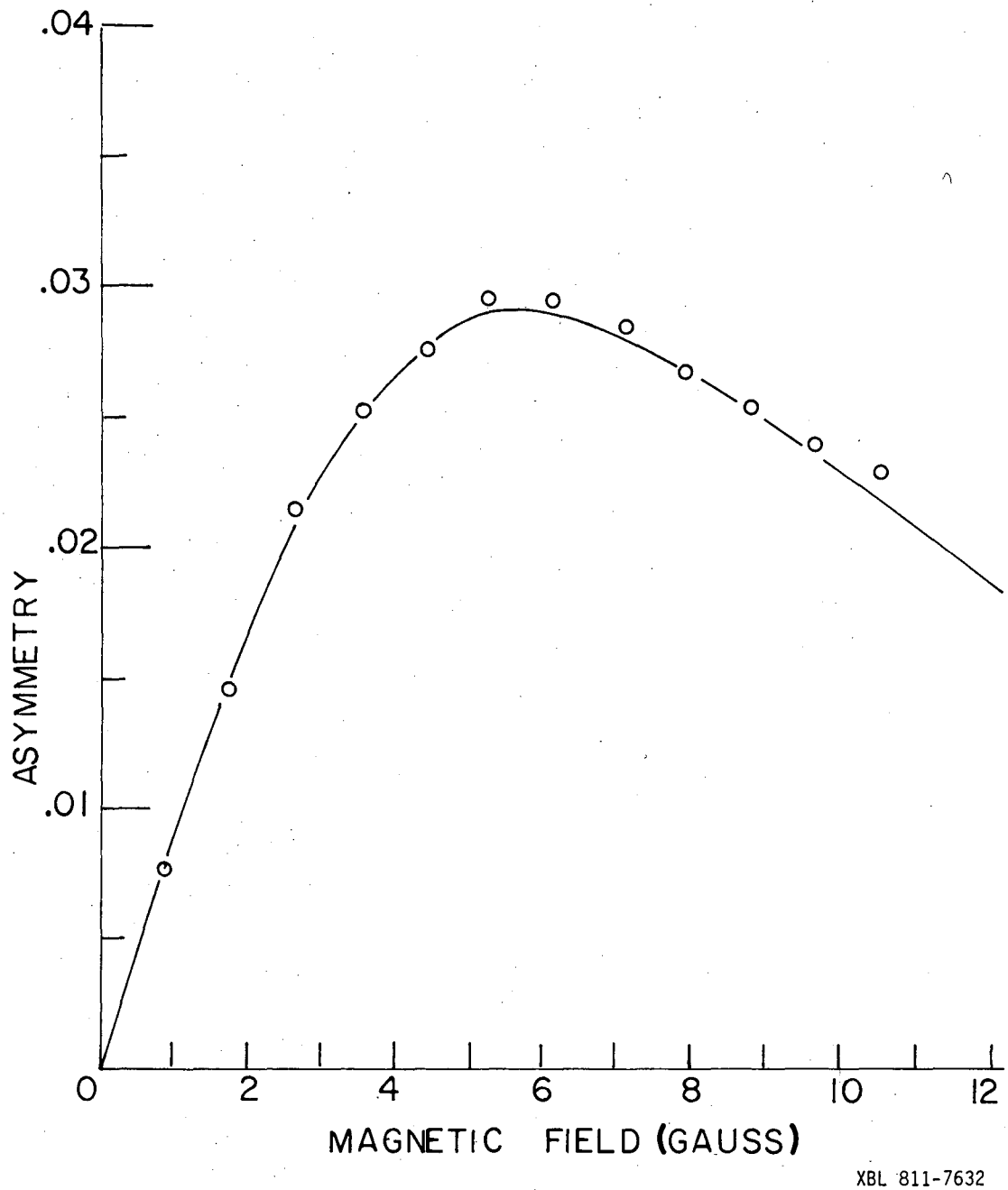
.04
.03
.02
.01
ASYMMETRY
0
2
4
6
8
10
12
MAGNETIC FIELD (GAUSS)
XBL 811-7632

Fig. 3

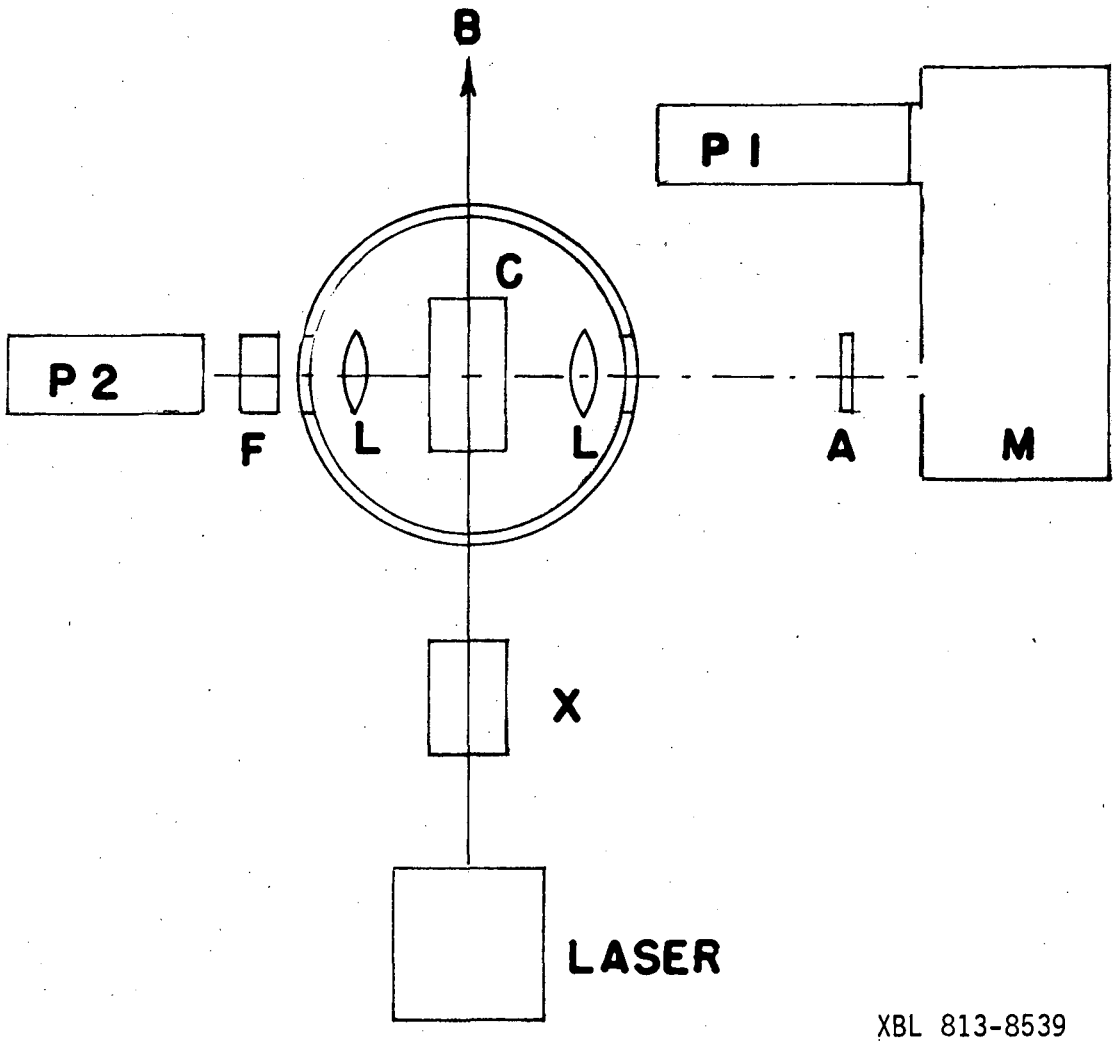

XBL 813-8539

Fig. 4

This report was done with support from the Department of Energy. Any conclusions or opinions expressed in this report represent solely those of the author(s) and not necessarily those of The Regents of the University of California, the Lawrence Berkeley Laboratory or the Department of Energy.

Reference to a company or product name does not imply approval or recommendation of the product by the University of California or the U.S. Department of Energy to the exclusion of others that may be suitable.

TECHNICAL INFORMATION DEPARTMENT
LAWRENCE BERKELEY LABORATORY
UNIVERSITY OF CALIFORNIA
BERKELEY, CALIFORNIA 94720