LBL-12461 c.2

Lawrence Berkeley Laboratory
UNIVERSITY OF CALIFORNIA

ENERGY & ENVIRONMENT DIVISION

JUN 30 1981
DOCUMENTS

To be presented at the IEEE/IAS Annual Meeting, Philadelphia, PA, October 5-9, 1981; and to be published in the Proceedings

ENERGY SAVINGS WITH SOLID-STATE BALLASTS IN A V.A. HOSPITAL

R.R. Verderber, O. Morse, A. Arthur, and F. Rubinstein

May 1981

TWO-WEEK LOAN COPY

This is a Library Circulating Copy which may be borrowed for two weeks. For a personal retention copy, call Tech. Info. Division, Ext. 6782

Prepared for the U.S. Department of Energy under Contract W-7405-ENG-48

LBL-12461 c.2

DISCLAIMER

This document was prepared as an account of work sponsored by the United States Government. While this document is believed to contain correct information, neither the United States Government nor any agency thereof, nor the Regents of the University of California, nor any of their employees, makes any warranty, express or implied, or assumes any legal responsibility for the accuracy, completeness, or usefulness of any information, apparatus, product, or process disclosed, or represents that its use would not infringe privately owned rights. Reference herein to any specific commercial product, process, or service by its trade name, trademark, manufacturer, or otherwise, does not necessarily constitute or imply its endorsement, recommendation, or favoring by the United States Government or any agency thereof, or the Regents of the University of California. The views and opinions of authors expressed herein do not necessarily state or reflect those of the United States Government or any agency thereof or the Regents of the University of California.

LBL-12461
EEB-L-81-06

ENERGY SAVINGS WITH SOLID-STATE BALLASTS IN A V.A. HOSPITAL

R.R. Verderber
O. Morse
A. Arthur
F. Rubinstein

Lawrence Berkeley Laboratory
University of California
Berkeley, California 94720
May 1981

Paper to be presented at the IEEE/IAS (Institute of Electrical and Electronics Engineers/Industry Applications Society) Annual Meeting in Philadelphia, Pennsylvania, October 5-9, 1981.

The work described in this paper was supported by the Assistant Secretary for Conservation and Renewable Energy, Office of Buildings and Community Systems, Consumer Products Division of the U.S. Department of Energy under Contract No. W-7405-ENG-48 and by the Veterans Administration Office of Construction under Order No. 80-08-18.

ENERGY SAVINGS WITH SOLID-STATE BALLASTS IN A V.A. HOSPITAL

R.R. Verderber
O. Morse
A. Arthur
F. Rubinstein

Lawrence Berkeley Laboratory
University of California
Berkeley, California 94720

Summary

More than two hundred solid-state fluorescent ballasts were installed in representative areas of a Veterans Administration Hospital in Long Beach, California, to determine the cost-effectiveness of such an installation.

The power and illumination levels in the test sites were measured first as they initially existed, then after the fixtures were cleaned and relamped with energy-saving fluorescent lamps, and finally after the core-coil ballasts were replaced with solid-state ballasts. The annual energy savings for the complete retrofit was measured as 33.9%.

In the director's suite natural daylight was used to supplement the electrical illumination, providing an additional 20-25% energy savings. Thus, in that area, the total annual energy savings amounted to 48%.

All of the measured data are analyzed on the basis of life-cycle costing. The analyses are presented on sets of curves relating the cost-effective price of a ballast to the cost of electrical energy.

Introduction

The staff of the Veterans Administration (VA), through their Office of Construction, have been actively pursuing ways to cost-effectively reduce the energy used in operating their buildings. The solid-state ballast, which has been shown to operate fluorescent lamps 20-25% more efficiently than core-coil ballasts,[1] represented another opportunity for the VA to meet these efficiency objectives. Installing these ballasts in VA hospitals can significantly impact the buildings' energy use since lighting represents about 40-50% of the energy load. When the total performance of a solid-state ballasted fluorescent lamp system is considered, the real energy savings will exceed the measured intrinsic efficiency,[2] reducing a building's energy load by more than 20% while improving the illumination system.

At the time the VA expressed an interest in solid-state ballasts (mid-1979), the ballasts were in their final stages of development and not completely field-tested. Principal concerns of the VA were the reliabilty, safety, and cost-effectiveness of the high-frequency (20 kHz to 30 kHz) operation of the ballasts.

Toward this end the Veterans Administration Office of Construction supported a demonstration to qualify the use of solid-state ballasts in their buildings. Their VA Hospital in Long Beach, California, was selected as the demonstration site. In concert with the VA office in Washington, D.C., and the engineering staff at the Long Beach VA Hospital, the Lawrence Berkeley Laboratory Lighting Program staff designed a demonstration schedule. This report presents the results and conclusions on the cost-effectiveness of this solid-state ballast demonstration.

Demonstration Design

Outpatient Lobby. The outpatient lobby was selected as representing a large, general-use space in a hospital. The floor plan is shown in Figure 1.

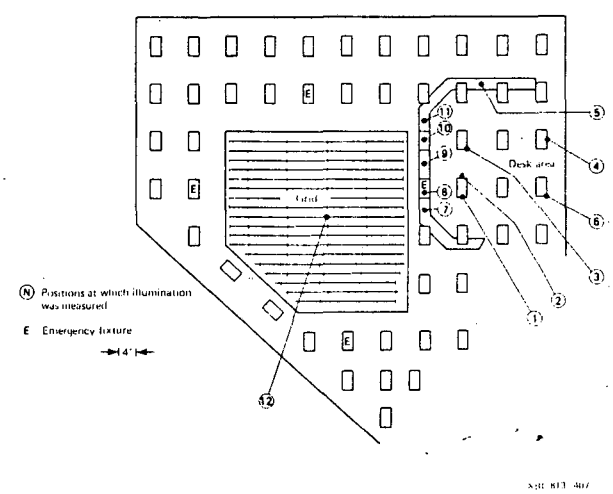

Figure 1. Floor Plan of Lobby Lighting.

The lobby is in a new wing of a building, and the lighting system has been operating less than twelve months (6000 hours). About 75% of the space is a sitting area where visual tasks are not critical, consisting of casual reading by visitors and waiting patients. A reception area, filling the remaining space, is the site of more critical visual tasks--

filing, typing, data processing, reading records, etc. The average light level in the sitting area is 415 lux (39 footcandles) and in the reception area 731 lux (68 footcandles). These lighting levels are within recommended federal guidelines. In the perimeter areas of the lobby 132 40-watt, T-12, rapid-start, cool white fluorescent lamps (66 ballasts) are used in enclosed two- and four-lamp (2'x 4') fixtures. The locations of these fixtures are shown schematically in Figure 1 as rectangles and are of the non-air handling type. The minimum lamp wall temperature of these lamps ranged between 46°C and 51°C. The connected load for the lighting system in this area is 1.37 watts per square foot.

A large grid of closely spaced bare lamps supply illumination in the center of the lobby. The grid has no venting and contains 146 40-watt, T-12, rapid-start, cool white fluorescent lamps. The minimum lamp wall temperature here is about 61°C. The coefficient of utilization of the grid is poor, and the connected load in this area is 4.2 watts per square foot.

The average lighting level and connected load for the lobby, including the reception area (4336 ft^2), is 494 lux (46 footcandles) and 2.8 watts per square foot.

Director's Suite. The director's suite, consisting of three offices, was selected as a typical office area. The floor layout is shown in Figure 2.

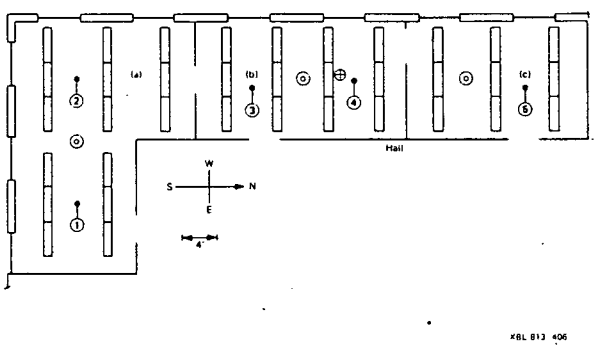

Figure 2. Floor Plan of Director's Suite Lighting.
a. Director's office
b. Secretary's office
c. Assistant Director's office
⊙ Sensing photocell
⊕ Photo diode
Ⓝ Positions at which static light levels were measured

The suite is in an old wing that receives no scheduled lighting maintenance. That is, the lighting fixtures have not been cleaned routinely and lamps are replaced only when they fail. The suite is illuminated with 72 40-watt, T-12, rapid-start, cool white fluorescent lamps (36 ballasts) in enclosed, non-air handling, two-lamp (1'x 4') fixtures. The light levels in the executive offices are 695 lux (65 footcandles) and 603 lux (56 footcandles); the level is 856 lux (80 footcandles) in the secretaries' office.

The connected load for the suite (952 ft^2) is 3.4 watts per square foot, with an average light level of 718 lux (67 footcandles).

Test Procedures

Electrical, Light Instruments. In the lobby and director's suite, where the performance of solid-state ballasted systems was to be assessed, the lighting circuits were rewired to place all of the test fixtures on the same branch circuit. This permitted us to connect the current and power transducers around one power line in the electric closet. Thus data could be collected without disturbing the occupants or the normal operation of the test areas. The electrical data were collected before and after the scheduled changes in the lighting system (see next section, entitled Test Schedule).

Light levels were measured with a Tektronix J-16 photometer and a J-6511 probe. This probe is both cosine- and color-corrected. The light levels were measured at several locations in each test area during evening hours. The positions at which the light levels were measured were precisely located to be certain that subsequent light measurements were taken at the same positions, assuring accurate comparisons. Figures 1 and 2 show the positions at which illumination was measured in the lobby and the director's suite, respectively.

Daylight Instrumentation. The director's suite has windows that provide natural illumination. To exploit this source of illumination the light output of the fluorescent lamps was automatically controlled with the solid-state ballasts, so they could be dimmed in response to the prevailing natural illumination. A photocell was placed in the ceiling of each office to sense the level of illumination and send a signal to the ballasts to change the light output of the lamps when the nighttime level of illumination was altered. The design goal of this dimming system was to obtain a constant illumination level throughout the day. A schematic of the complete dimming systems is shown in Figure 3.

The photocell senses the light level, and the photo-control module sends a signal to the ballasts to provide the prescribed illumination. In the director's suite one photocell and module in each office control all of the fixtures in that office (from 18 to 30 lamps). The photo-control module can also be operated manually. That is, a user can set the lights manually to any level desired. When the automatic dimming system was installed, the maximum and minimum desired electric light levels were established. To measure the system's performance and to assess design goals, a photodiode was placed on the secretary's desk to continuously monitor incident illumination throughout the day (see Figure 2). The

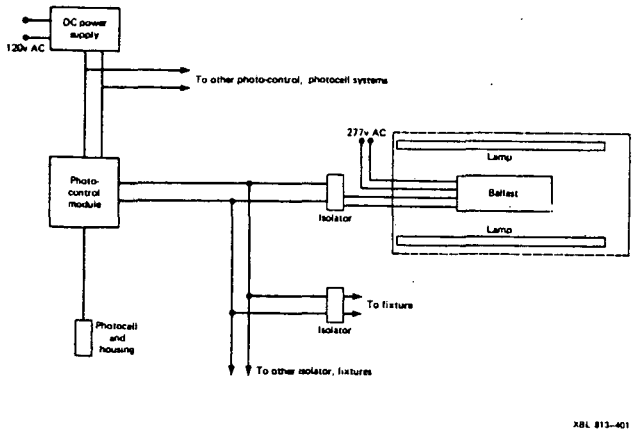

Figure 3. Automatic, Photo-Controlled Dimming System.

amplified output signal from the photodiode (which measured the illumination) and the power transducer (which measured the power in the suite) were recorded continuously for several days with a two-pen chart recorder.

Test Schedule

The designed test schedule reflects LBL's attempt to accurately measure those changes in the electrical load and energy consumption that resulted from introducing energy-efficient lighting concepts and products.

Baseline I Data. Prior to any changes to the test areas, the power, current, voltage, and light levels were measured. The compiled information has been designated as Baseline I Data. All measurements were made with the lighting system at equilibrium in the evening. Measuring the light levels at night assured that only the electrical, no natural, light levels were measured.

The lamp wall temperatures in several fixtures were also measured with thermocouples fixed to the midpoint of the lamps.

Baseline II Data. After Baseline I Data were collected and compiled, all the fixtures were cleaned and relamped. The 40-watt, T-12 lamps were replaced with 35-watt, Type II energy-saving lamps. The lamps were operated for more than 1000 hours prior to any measurements. This allowed the lamps to pass through their initial large lumen depreciation change (~5%). Thus, for any subsequent changes to the system (e.g., the installation of a solid-state ballast), the changes in the light level due to lamp lumen depreciation would be so small they could be neglected.

The same data were collected and compiled as for Baseline I. We designated these data as Baseline II Data. These data measured the changes in connected load and illumination due to cleaning and relamping with energy-saving lamps.

Experimental. Within three weeks after collecting Baseline II Data (~360 hours of operation), the core-coil ballasts were replaced with solid-state ballasts.

The standard series of measurements were then repeated so that we could compare the data to the initial condition of the test site, as well as identify those changes due to the performance of the solid-state ballasts.

Ballast Manufacture

Specifications

After the design and scope of the demonstration had been established, a set of specifications were generated for the solid-state ballasts. The features of a solid-state ballast needed for this qualification study included 277-volt input, automatic dimming capability, reliability, warrantee, and the manufacturer's agreement to a set of acceptance criteria. The complete ballast specifications are listed in Appendix A. Luminoptics Corporation was selected to supply the 250 solid-state ballasts and three photo-control modules.

Quality Assurance

There were no known product lines of solid-state ballasts at the time of this study. Thus, acceptance criteria were established for the finished product (see Appendix A). The criteria consisted of a series of burn-in procedures at the Luminoptics plant and at the LBL Lighting Laboratory. While testing the delivered ballasts, the initial criteria were ammended; the final set of burn-in procedures follow.

At the manufacturing plant:

- A 48-hour burn-in for all ballasts.

At LBL (100% testing):

- Operate ballast at input voltages of 305, 249, and 277 (277±10%);
- Operate 24 hours (3 hours on/20 minutes off) with one lamp removed;
- Operate 24 hours (3 hours on /20 minutes off) with both lamps in place;
- Replace lamps several times while power is supplied to ballast.

At the LBL Laboratory, twenty-five ballast failures occurred during the above test schedule. At the test site (VA Hospital), thirteen solid-state ballasts were found defective after passing the above test schedule. Seven of the thirteen failed immediately after installation, suggesting shipping damage. At the time of the preparation of this report, about 200 solid-state ballasts will have been operating for more than six months (3000 hours).

All of the failed ballasts were returned to Luminoptics and replaced. The manufacturer analyzed the modes of failure and submitted a report on their nature. The report shows that all the failures can be explained (component vendor selection; breakage during shipping) and are not due to any shortcomings in the basic circuit design.

Results

Static Performance

Director's Suite. Table I lists measurements for the initial connected load and light levels for the suite (Baseline I), after cleaning and relamping (Baseline II), and after replacing the core ballasts with solid-state ballasts (Experimental).

TABLE 1

ELECTRICAL & LIGHT MEASUREMENTS IN DIRECTOR'S SUITE

DESCRIPTION	BASELINE I (1)	BASELINE II (2)	EXPERIMENTAL (3)
ELECTRICAL			
POWER (WATTS)	3208	2870	2377
POWER PER BALLAST (WATTS)	89.1	79.7	66.
POWER FACTOR	.95	.95	.95
LIGHT LEVEL (LUX)			
DIRECTOR	695	981	952
ASST. DIRECTOR	603	1098	1038
SECRETARY	856	1057	1013
FIGURE OF MERIT			
AVERAGE LIGHT (LUX)	718	1045	1001
EFFICIENCY (LUX/WATT)	8.06	13.11	15.2
RELATIVE LIGHT	1	1.46	1.39(.96)*
RELATIVE POWER	1	.89	.74(.83)*
RELATIVE EFFICIENCY	1	1.63	1.89(1.16)*

(1) CORE-COIL BALLASTS, 40-WATT LAMPS
(2) CORE-COIL BALLASTS, 35-WATT LAMPS, CLEANED
(3) SOLID-STATE BALLASTS, 35-WATT LAMPS CLEANED
* WITH RESPECT TO BASELINE II

Illumination was measured in units of lux (10.76 lux = 1 footcandle). Power is given in terms of the total power for the suite and in terms of the average power per ballast (total power ÷ number of ballasts).

To aid in presenting the relative changes in the important parameters (power, light level, and efficiency), the results listed under figure of merit are normalized with respect to Baseline I Data. In the last column (Experimental), the figures in parentheses reflect changes with respect to Baseline II Data. The differences in parameters (light, power, and efficiency) with respect to Baseline II show the changes due to replacing the core-coil ballasts with solid-state ballasts.

Baseline II Data show a 46% increase in light level. The improvement is due to cleaning the fixtures and refitting with new lamps. The 11% reduction of power results from using 35-watt lamps in place of 40-watt lamps.

By refitting with solid-state ballasts, the relative power is reduced 26%, while the light level is increased 39% with respect to initial conditions.

Lobby. Table II lists results of the static measurements in the lobby for the three lighting conditions (Baseline I, Baseline II, and Experimental).

TABLE 2

ELECTRICAL & LIGHT MEASUREMENTS IN LOBBY

DESCRIPTION	BASELINE I (1)	BASELINE II (2) A	BASELINE II (2) B	EXPERIMENTAL (3) A	EXPERIMENTAL (3) B
ELECTRICAL					
POWER (WATT)	12,130	5,168	10,448	4,825	9,108
POWER PER BALLAST (WATT)					
FIXTURE	90.0		80.0		64.9
GRID	84.8	70.8	70.8	66.1	66.1
POWER FACTOR	.89	.96	.96	.96	.96
LIGHT LEVEL (LUX)					
FIXTURE	731.		851.		818.
GRID	415.	417.	417.	520.	520.

(1) CORE-COIL BALLASTS, 40-WATT LAMPS
(2) CORE-COIL BALLASTS, 35-WATT LAMPS, CLEANED
(3) SOLID-STATE BALLASTS, 35-WATT LAMPS, CLEANED
* WITH RESPECT TO BASELINE II
FIXTURES: 66 BALLASTS; GRID: 73 BALLASTS

In the lobby the ballasts in the enclosed fixtures and in the grid were measured independently. This was required because the lamp wall temperatures in these two types of fixtures differed by as much as 10°C, resulting in a large difference in input power per ballast. It is well known that lamp performance depends upon lamp wall temperature; a description of the difference is presented in Appendix B. The lower power per ballast in the grid is due to the higher lamp wall temperature (~61°C) compared to the temperature of the lamps in the enclosed fixtures (~50°C). However, as the results in Table II show, the light output of the lamps in the grid also decreases but still shows a net decrease in system efficiency.

The light level in the lobby increased by 16%. This is much less than measured in the director's suite, attributable to less lumen depreciation for these newer lamps. Under the grid the light level stayed the same (the grid had no diffusers that would accumulate dirt); thus, there was no appreciable dirt lumen depreciation.

The data in Table III are presented normalized with respect to the initial condition.

TABLE III

RELATIVE SYSTEM PERFORMANCE IN LOBBY

FIGURE OF MERIT	BASELINE I (1)	BASELINE II (2) A	BASELINE II (2) B	EXPERIMENTAL (3) A	EXPERIMENTAL (3) B
EFFICIENCY (LUX/WATT)					
FIXTURE	8.12		10.6		12.6
GRID	4.89	5.88	5.88	7.87	7.87
RELATIVE LIGHT					
FIXTURE	1.00		1.16		1.12 (.96)*
GRID	1.00	1.00	1.00	1.25	1.25 (1.25)*
RELATIVE POWER					
FIXTURE	1.00		.89		1.55 (1.18)*
GRID	1.00	.83	.83	.78	.78 (.94)*
RELATIVE EFFICIENCY					
FIXTURE	1.00		1.31		1.55 (1.18)*
GRID	1.00	1.20	1.20	1.61	1.61 (1.34)*

(1) CORE-COIL BALLASTS, 40-WATT LAMPS
(2) CORE-COIL BALLASTS, 35-WATT LAMPS, CLEANED
(3) SOLID-STATE BALLASTS, 35-WATT LAMPS, CLEANED
* WITH RESPECT TO BASELINE II
FIXTURES: 66 BALLASTS; GRID: 73 BALLASTS

Because of the high lamp wall temperature the solid-state ballast provided a 34% increase in efficiency for operating the fluorescent lamps in the grid. This shows that the total system efficiency is maintained over a wider range of lamp wall temperatures (30°C to 61°C) in a solid-state ballasted system than in a core-coil system. That is, the system efficiency for a core-coil ballasted system is drastically reduced when the lamp wall temperature exceeds 50°C. The excellent regulation by solid-state ballasts is shown by comparing the input power of the two types of ballasts in the two sections of the lobby (the fixtures and the grid). Input power for the solid-state ballasts is virtually the same for both stations (64.9 and 66.1 watts), while the core-coil ballasts differ by nearly 10 watts for both the 40-watt lamps (90 and 80 watts) and the 35-watt lamps (80 and 70 watts). Table IV lists the power per ballast in the two sections.

TABLE IV

POWER PER BALLAST IN THE GRID AND FIXTURES

BALLAST TYPE	POWER PER BALLAST (WATTS) GRID (LAMP TEMP. 61°C)	FIXTURES (LAMP TEMP. 50°C)
CORE-COIL	84.8 (1)	90.0 (1)
	70.8 (2)	80.0 (2)
SOLID-STATE	66.1 (2)	64.9 (2)

(1) 40-WATT LAMPS
(2) 35-WATT ENERGY-EFFICIENT LAMPS

Daylighting

Figures 4 and 5 show the continuous power consumption for the director's suite and the illumination on the secretaries' desk for two days in mid-October (the 11th and 12th).

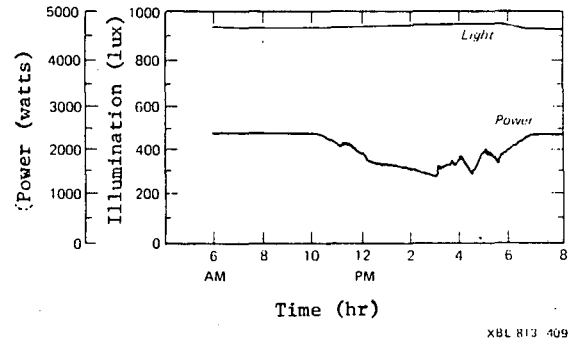

Figure 4. Light Level, Power on a Cloudy Day in Director's Suite.

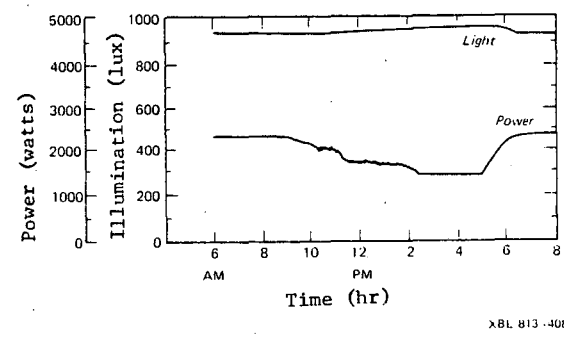

Figure 5. Light Level, Power on a Clear Day in Director's Suite.

The 11th was a cloudy day, while the 12th was clear. For a 10-hour day (8 a.m. to 6 p.m.) the energy consumption is 23.8 kWh with a dedicated solid-state ballasted system. The energy used on the 11th and 12th was 19.1 kWh and 17.8 kWh, respectively. This shows that an energy savings of 20-25% is possible from using daylight. The annual savings would be 1392.3 kWh. At $.07 per kWh, the annual savings would be $97.46.

The dimming system's good design (placement of the photocell sensors and operation of the module) is reflected by the fact that the light level at the task was maintained at between 940 and 960 lux (± 1%), while the electrically derived illumination fluctuated as much as 40%.

The dimming system was adjusted so that the electric light could be reduced up to 60% of its maximum output. This conservative approach was taken because the 35-watt lamps used are generally more difficult to

TABLE V

POWER PER BALLAST

SITE	BASELINE I (40-WATT LPS) (CORE/BALLAST) (WATT)	BASELINE II (35-WATT LPS) (CORE/BALLAST) (WATT)	BASELINE II REDUCED POWER (BLI) (WATT)	EXPERIMENTAL: DEDICATED (WATT) (35-WATT LPS) (SOLID-STATE BALLAST)	DEDICATED REDUCED POWER BLI	DEDICATED REDUCED POWER BLII	DIMMABLE (WATT) (35-WATT LPS) (SOLID-STATE BALLAST)	DIMMABLE REDUCED POWER BLI	DIMMABLE REDUCED POWER BLII	DIMMABLE REDUCED POWER EXP DED.
OFFICE	89.1	79.7	9.4	66.0	23.1	13.7	53.5	35.6	26.2	12.5
LOBBY										
FIXTURE	90.0	80.0	10.0	64.9	25.1	15.1	61.2	28.8	18.9	3.7
GRID	84.8	70.8	14.0	66.1	18.7	4.7	56.0	28.8	14.8	10.1

dim than the standard 40-watt lamps. One author (RRV), however, has a dimming system in his office which satisfactorily operates 35-watt lamps over a light output range of from 100% to less than 50%.

The sensitivity of the dimming system to the natural ambient light is shown by the greater reduction of energy on the clear day than on the cloudy day, as one would anticipate. In addition, because most of the windows faced the west, more natural illumination was available in mid-afternoon. The data indicate the least lighting energy was used in the afternoon between 2 pm and 5 pm.

Life-Cycle Cost Analysis

Tables V and VI present the basic parameters from which we determined the cost-effectiveness of the various energy-conserving strategies (cleaning and relamping, and the use of dedicated or dimmable solid-state ballasts).

The power per ballast is obtained from Tables I and II. The reduction in power is with respect to the major column heading. For example, the reduction in power for the dedicated, experimental condition compared to the Baseline I condition is listed under the column entitled Experimental, dedicated BLI (23.1, 25.1, and 18.7 watts).

The power per ballast for the dimmable solid-state system was calculated from Tables I and II. It is the power that would be needed for the solid-state ballasted system to provide the same light level as was measured initially (Baseline I light levels). This is simply the power per ballast at Baseline I divided by the relative efficiency in the Experimental column. The values for the dimmable ballasts in Table V are corrected to account for lumen depreciation, based upon a two- year scheduled maintenance program. We have used a 10% lamp lumen depreciation rate for the two-year schedule. Thus, the averge power per ballast for dimmable ballasts is increased by 5% when adjusted to provide initial light levels. We also added 5% more power to account for the nonlinearity of dimming.

Table VI lists the estimated hours of operation as well as the number of lamps and ballasts in each test area. The director's office is used six days a week and 11 hours per day. The lobby is used 17 hours a day throughout the year.

TABLE VI

OPERATION OF DEMONSTRATION AREAS

SITE	ANNUAL USE (HRS)	NUMBER OF LAMPS	NUMBER OF BALLASTS
DIRECTOR'S SUITE	3500	72	36
LOBBY			
FIXTURE	6000	132	66
GRID	6000	146	73

Cleaning and Relamping

Table VII lists the cost of cleaning and relamping the area.

TABLE VII

COST OF CLEANING AND RELAMPING

SITE	INITIAL LAMP COST ($)	INITIAL LABOR COST ($)	TOTAL COST ($)	ANNUAL COST ($)
DIRECTOR'S SUITE	216	72	288	
LOBBY				
FIXTURE	396	132	528	
GRID	438	146	584	
		TOTAL	1,400	806.7

We have used the list price of $3.00 per energy-efficient lamp and have estimated a cost of $2.00 to clean and relamp each fixture. The total initial cost is $1400. In order to determine the annual cost we assume a two-year maintenance schedule and discount the initial investment by 10% annually. We used the uniform captial recovery equation:[3]

$$A = P \times UCR = P \times \frac{i(1+i)^y}{(1+i)^n - 1} \qquad \text{(Eq.1)}$$

where A is the installment amount,
P is the initial investment,
i is the discount rate, and
n is the equal periodic installments.

Table VIII lists the energy saved annually in both areas by using the energy-saving lamps (11,276 kWh).

TABLE VIII

ENERGY SAVED AFTER CLEANING AND RELAMPING

SITE	REDUCED POWER (WATTS/BAL.)	ENERGY SAVED (kWH/YR.)	ANNUAL SAVINGS($) AT $0.05kWH	$0.10kWH
DIRECTOR'S SUITE	9.4	1,184	59.2	118.4
LOBBY				
FIXTURE	10	3,960	198	396
GRID	14	6,132	306.6	613.2
TOTAL		11,276	563.8	1,127.6

This reduces the annual energy consumption by 13%. Cleaning fixtures increases the light output from the fixtures but does not affect the connected load or energy consumption. Figure 6 is a plot of energy cost versus initial cost of the fluorescent lamp.

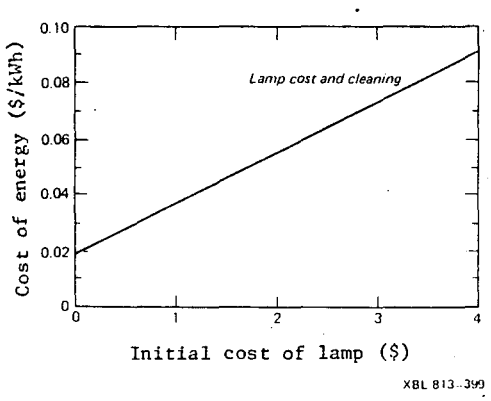

Figure 6. Cost-Effectiveness of Cleaning and Relamping.

This curve permits a user to determine the cost-effective price of a lamp depending on the cost of energy. The curve is generated from Tables VI, VII, and VIII. It is a conservative estimate since it discounts the initial lamp and labor investment but assumes a constant cost for energy.

Solid-State Ballasts

Dedicated Operation. The costs of ballasts and installation are listed in Table IX.

TABLE IX

COST OF SOLID-STATE BALLASTS

SITE	LABOR COST ($)	BALLAST COST ($) AT $20/BAL.	$30/BAL.	$40/BAL.	$50/BAL.
DIRECTOR'S SUITE	360	720	1,080	1,440	1,800
LOBBY					
FIXTURE	660	1,320	1,980	2,640	3,300
GRID	730	1,460	2,190	2,920	3,650
TOTAL	1,750	3,500	5,250	7,000	8,750
ANNUAL COST	285	570	854	1,139	1,424
LABOR		285	285	285	285
CLEAN & LAMP		806.7	806.7	806.7	806.7
TOTAL ANNUAL COST		1,661.7	1,945.7	2,230.7	2,515.7

The labor cost to change one ballast is estimated to be $10.00. Initial ballast costs are considered in the range of $20 to $50 each. The annual costs are obtained by considering a 10-year life and using a 10% discount rate in Equation 1. The total annual cost is the sum of ballasts, labor, cleaning, and relamping.

The energy saved from having the solid-state ballasts operate in a dedicated mode is listed in Table X.

TABLE X

ENERGY SAVINGS WITH DEDICATED SOLID-STATE BALLASTS

SITE	REDUCED POWER (WATTS/BAL.)	ENERGY SAVED (kWH/YR)	ANNUAL SAVINGS($) AT $0.05/kWH	$0.10/kWH
DIRECTOR'S SUITE	23.1	2,910.6	145.53	291.06
LOBBY				
FIXTURE	25.1	9,939.6	496.98	993.96
GRID	18.7	8,190.6	409.53	819.06
TOTAL		21,040.8	1,052.04	2,104.08

The savings are determined using the conditions in Tables V and VI. The annual savings is 21,090.8 kWh, or a 25% reduction from the initial energy consumption.

Two cost-effective curves are shown in Figure 7, relating the initial cost of the ballast and the cost of energy. The curves are generated using Tables IX and X and a cost of $1 or $3 per lamp.

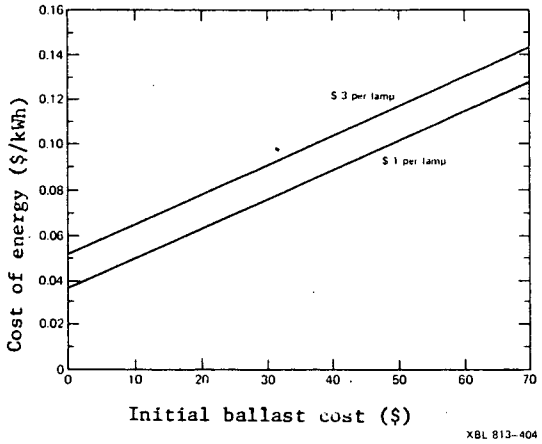

Figure 7. Total Cost-Effectiveness with Dedicated Solid-State Ballasts.

In order to compare the relative merits of a solid-state and a core-coil ballast, Table XI lists the energy savings obtained solely by refitting the core ballast with a solid-state ballast operated in the dedicated mode.

TABLE XI

ENERGY SAVED WITH SOLID-STATE BALLAST RELATIVE TO CORE BALLASTS

SITE	REDUCED POWER (WATTS/BAL.)	ENERGY SAVED (kWH/YR)	ANNUAL SAVINGS($) $0.05/kWH	$0.10/kWH
DIRECTOR'S SUITE	13.7	1726.2	86.31	172.62
LOBBY				
FIXTURE	15.1	5979.6	298.98	597.96
GRID	4.7	2058.6	102.93	205.86
	TOTAL	9764.4	488.22	976.44

The annual energy savings is 9764.4 kWh, meaning that the solid-state ballasts use 14% less power than do core-coil ballasts.

Figure 8 is the cost-effective curve one can use when considering the purchase of a standard core-coil ballast or a dedicated solid-state ballast.

The premium cost of the solid-state ballast is plotted-- i.e., the initial cost of the ballast is the premium cost plus the cost of a standard core-coil ballast. (The cost of a replacement core-coil ballast to an end-user is about $10.) The curve shows that if a decision has been made to clean, relamp, and change the ballast, a cost-effective premium price for a dedicated solid-state ballast should be $18 for an

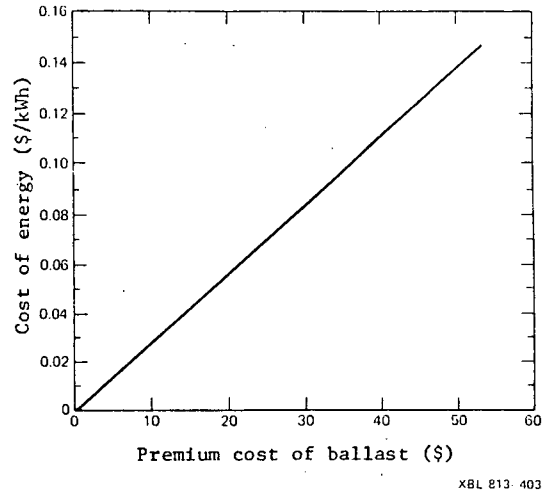

Figure 8. Cost-Effectiveness of Dedicated Core and Solid-State Ballasts.

energy cost of $0.05 per kWh. The total initial cost-effective price of the ballast, if a standard ballast costs $10, would be $28.

Dimmable Operation. The previous sections indicate that the factors which reduced the connected load were both energy-efficient lamps and solid-state ballasts. Cleaning fixtures and installing new lamps provided higher light levels. With the use of dimming ballasts the final light levels can be reduced to the initial levels of illumination, which were considered acceptable by the occupants, to further reduce the connected load.

Table XII lists the total energy saved by using dimmable solid-state ballasts after cleaning and relamping, and adjusting the light levels to the initial (Baseline I) illumination levels.

TABLE XII

TOTAL ENERGY SAVED WITH DIMMABLE SOLID-STATE BALLASTS

SITE	REDUCED POWER (WATTS/BAL.)	ENERGY SAVED (kWH/YR)	ANNUAL SAVINGS($) AT $0.05/kWH	$0.10/kWH
DIRECTOR'S SUITE	35.6	4,485.6	224.28	448.56
LOBBY				
FIXTURE	28.8	11,404.8	570.24	1,140.48
GRID	28.8	12,614.4	630.72	1,261.44
	TOTAL	28,504.8	1,425.24	2,850.48

The power per ballast is corrected to account for a 10% lamp lumen depreciation over a two-year maintenance schedule. Figure 9 is the cost-effective plot relating initial ballast cost and the cost of energy. Two curves have been generated for lamp costs of $1 and $3.

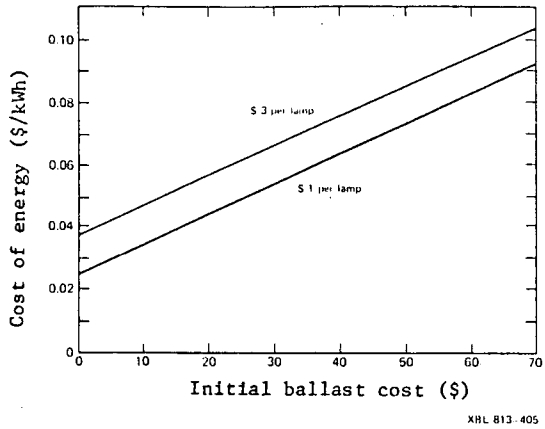

Figure 9. Total Cost-Effectiveness with Dimmable Solid-State Ballasts.

Table XIII presents the energy savings for a dimmable solid-state ballast, relative to a standard core-coil ballast.

TABLE XIII

ENERGY SAVED WITH DIMMABLE SOLID-STATE BALLAST RELATIVE TO CORE BALLAST

SITE	REDUCED POWER (WATTS/BAL.)	ENERGY SAVED (kWH/YR)	ANNUAL SAVINGS($) AT $0.05/kWH	$0.10/kWH
DIRECTOR'S SUITE	26.2	330.12	165.06	330.12
LOBBY				
FIXTURE	18.9	7484.4	374.22	748.44
GRID	14.8	6482.4	324.12	648.24
TOTAL		17,268.0	863.40	1,726.80

The cost-effective curve for the price of the solid-state ballast compared to a core-coil ballast is plotted in Figure 10.

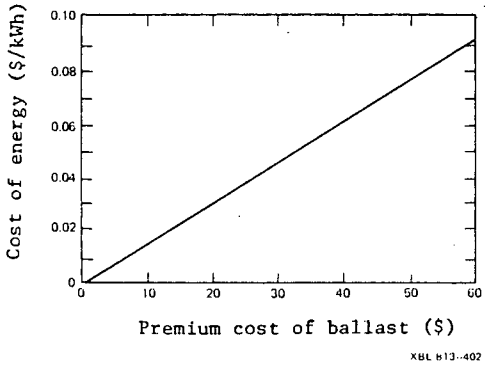

Figure 10. Cost-Effectiveness of a Core and Dimmable Solid-State Ballast.

Note that ballast cost is given as premium cost. Initial ballast cost is the premium cost plus the cost of a standard core-coil ballast (approximately $10).

Finally, Table XIV lists the energy saved when the solid-state ballast is operated in the dimmable as opposed to dedicated mode. The cost-effective curve for this comparision is plotted in Figure 11.

TABLE XIV

ENERGY SAVED WITH DIMMABLE SOLID-STATE BALLAST RELATIVE TO A DEDICATED SOLID-STATE BALLAST

SITE	REDUCED POWER	ENERGY SAVED	ANNUAL SAVINGS($) AT $ 0.05/kWH	$ 0.10/kWH
DIRECTOR'S SUITE	12.5	1575	78.75	157.5
LOBBY				
FIXTURE	3.7	1465.2	73.26	146.52
GRID	10.1	4423.8	221.19	442.38
TOTAL:		7464	373.2	746.4

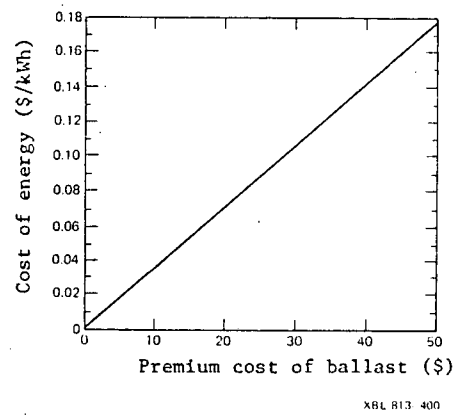

Figure 11. Cost-Effectiveness of Dedicated and Dimmable Solid-State Ballasts.

Decision Criteria

Site Characteristics. The collection of data at the VA Hospital was intended to establish the cost at which lamps and solid-state ballasts would be cost-effective. The initial lighting in the two test areas--director's suite and lobby--can be characterized as follows:

a. Director's Suite - lamps in enclosed fixtures; lamps have experienced considerable lamp and dirt lumen depreciation.

b. Lobby - one group of lights in fixtures that have very little lamp and dirt lumen depreciation; another group of closely spaced lamps in a grid, which are operating at a high lamp wall temperature, resulting in a light output about 25% below manufacturer's rated output.

Ballast Design. The solid-state ballasts

selected for this qualification were the Luminoptics Corporation architectural dimming ballasts. These have been shown to achieve efficiencies of 90 lumens per watt and improvments to efficiency, relative to a core-ballasted system, as high as 25%. Since they are dimmable ballasts, a design decision was reached to operate these ballasts at full or near full filament power. These improvements in reliability and lowering the component count to reduce product cost have resulted in a decrease in intrinsic efficiency. However, we operated this ballast in a dedicated mode to collect data to elucidate this condition. Solid-state ballasts designed to operate in a dedicated manner should and can be made to achieve efficiency improvements, relative to a core ballast, above 20%.[4]

In the analysis for the ballasts operated in the dimmable mode we have considered only one of several available energy-savings strategies, manually setting the lighting level to match the initial illumination level. In the preceeding section we have shown that an automatically controlled dimming system will save an additional 20-25% energy through the use of daylighting. Another independent energy-savings strategy that can be achieved with solid-state ballasts is "tuning" the lighting system to each area's visual requirements. In aisles, halls, and other non-critical areas it is possible to lower levels of illumination and still maintain safe and comfortable visual conditions. Thus, the effective target prices that are presented in the cost-effectiveness figures (9 through 11) for dimmable ballasts are conservative, because of reasons given above as well as our use of a constant cost for energy.

Ballast Cost Targets. Table XV lists the target costs for solid-state ballasts above which it is no longer cost-effective for the designated application in the test areas of the Long Beach VA Hospital. The reader should notice that when the solid-state ballast is compared to the initial condition, after cleaning and relamping, an initial cost is cited. The total cost used includes lamp costs, cleaning costs, and ballast installation cost, as well as initial ballast cost. This situation simulates the basis for a management decision to retrofit a lighting system. The table shows that a $10 dedicated solid-state ballast is cost-effective at energy rates of $.05 per kWh. At energy rates of $0.10 per kWh, dedicated ballasts are cost-effective at $50.

The other columns citing premium costs directly compare the cost-effectiveness of the two types of dedicated ballasts as well as that of the dimmable solid-state ballast with the dedicated core-coil and solid-state ballasts. However, in these comparisons we use the premium cost; that is, including the additional cost required to obtain the superior performing system. This situation simulates the basis on which management could select a new lighting system or one that is to be renovated. It also simulates a management decision to replace a failed ballast with the same type of ballast or with the new energy-efficient solid-state ballast. In all the above decisions the labor cost, lamp cost, and cost of a core-coil ballast will be incurred; one is concerned with the net worth that the additional expenditure (premium cost) will provide through the reduction in energy consumption.

Application of Decision Targets. The data and analysis have been prepared in the above manner to permit the VA Washington Office of Construction to use the tables as a guide for all their installations. By plotting the information as a function of energy and ballast cost, decisions can be made about which strategy and product is most cost-effective for any location.

TABLE XV

EFFECTIVE SOLID-STATE BALLAST COST

Cost of Energy ($ kWhr)	Lamp Cost ($)	Dedicated Solid-State Ballast Initial Cost[1] ($)	Dedicated Solid-State Ballast Premium Cost[2] ($)	Dimmable Solid-State Ballast Initial Cost[1]	Dimmable Solid-State Ballast Premium Cost[2]	Dimmable Solid-State Ballast Premium Cost[3]
0.050	1.00	<10	<18	<27	<32	<15
0.075	1.00	<30	<28	<54	<50	<23
0.100	1.00	<50	<35	<80	<64	<29

1. Initial cost of ballast for refit strategy (cleaning, relamping and refitting core ballast).
2. Premium cost of ballast for core ballast replacement on new construction strategy (initial cost = premium cost + cost of core-coil ballast).
3. Premium cost of ballast for dedicated solid-state ballast replacement on new construction strategy (initial cost = premium cost + cost of dedicated solid-state ballast).

When a ballast price is quoted and the price of energy known, one can select the most appropriate cost-effective curve (Figure 6, 7, 8, 9, or 10). If the strategy is cost-effective the return on investment (ROI) can be determined in order to compare two or more cost-effective strategies. The ROI is defined by the equation:

$$ROI = \frac{\text{monies saved in energy cost for strategy}}{\text{investment in energy-savings system}} \quad \text{(Eq.2)}$$

where: money saved = actual cost of energy minus cost-effective energy price

and

investment = cost-effective energy price.

For example, if one pays $0.85 per kilowatt-hour and a dimmable solid-state ballast is priced at $50, at $1 per lamp the ROI: is ($0.085 - $0.0070) X 100 ÷ ($0.070) = 21.4%.

Conclusions

Connected load can be reduced and light level increased by cleaning fixtures and replacing existing fluorescent lamps with energy-saving lamps. Power reductions of 11% result in an annual energy savings of 13.4%, or 11,276 kWh for the director's suite and lobby.

By retrofitting the cleaned and relamped areas with dedicated solid-state ballasts, the higher light levels are maintained with further reductions in connected load. Compared to the initial conditions, the power is reduced by 26.7% and results in an annual energy savings of 25% or 21,040.8 kWh for the director's suite and lobby.

By using dimmable solid-state ballasts to restore light levels to initial acceptable levels, the connected load is reduced still further. The power is reduced by 36.7%, resulting in an annual energy savings of 33.9% or 28,504.8 kWh for the director's suite and lobby. For new construction and renovation in areas where energy costs are $0.05 to $0.10 per kWh, the premium price for dedicated and dimmable solid-state ballasts can be as high as $18 to $35 and $32 to $64, respectively. Solid-state ballasts are available at these premium prices.

For refitting with energy-saving strategies in areas where energy costs are $0.075 per kWh, the initial price for dedicated and dimmable solid-state ballasts should be less than $30 and $54, respectively. Solid-state ballasts are available at those initial costs. In areas where energy costs are more than $0.10 per kWh, both dimmable ($80) and dedicated ($50) solid-state ballasts are available at cost-effective prices for all the energy-saving strategies.

Prognosis For Solid-State Ballast Cost

The present level of sales for solid-state ballasts is low, resulting in a relatively high cost per system. This report indicates that there are many areas in the nation where current solid-state ballast prices are cost-effective. Current solid-state ballast circuit designs lend themselves to standard cost-reduction techniques (thick film circuits, power hybrid circuits, and integrated circuits), which became attractive when the unit volume of demand increases. Astute ballast developers are working on these cost-reduction techniques today. In the near future we envision a range of prices for original equipment manufacturers (OEM) of $8 and $16 for dedicated and dimmable ballasts, respectively, which would suggest retail costs of no more than $16 and $32. These prices, and the anticipated increase in energy costs, will dictate the universal selection of solid-state ballasts for gas discharge lamps.

Acknowledgement

The LBL staff appreciate the timely support for our solid-state ballast program by Mr. Samuel S. Levinrad of the Veterans Administration Office of Construction. The successful execution of this program was made possible by the cooperation of the VA Long Beach management, the director's office, and the Engineering Department. We also recognize the contribution of Mr. Tom Millhouse, of the VA Hospital's Engineering Department, throughout all stages of this study (design, site preparation, refitting, and compiling data). Additional support was received from the Assistant Secretary for Conservation and Renewable Energy, Office of Buildings and Community Systems, Consumer Products Division of the U.S. Department of Energy under Contract No. W-7405-ENG-48.

References

1. R. R. Verderber, S. Selkowitz, and S. Berman, "Energy Efficiency Performance of Solid-State Ballast," Lighting Design & Application 9,23 (April 1979).

2. R. R. Verderber, "Electronic Ballast Improves Efficiency," Electrical Consultant 60, 20 (Nov.-Dec. 1980).

3. R.J. Brown and R.R. Yanuck, Life Cycle Costing: A Practical Guide to Energy Managers, The Fairmont Press, Inc., Atlanta GA p. 18 (1980).

4. R. R. Verderber, D. Cooper, and D.K. Ross, "Testing of Energy Conservation of Electronic Ballasts for Fluorescent Lighting," Lawrence Berkeley Laboratory report LBL-8315 (Oct. 1978). Presented at IEEE-IAS Annual Conference at Toronto, Canada (October 3, 1978).

5. E. E. Hammer, D. H. Riesland, and Q. D. Dobras, "Improved 35w Low Energy Lamps Ballast Systems," Illuminating Engineering Society Annual Conference, Atlantic City NJ (Sept. 17-19, 1979).

Appendix A

Ballast Specification and Acceptance Criteria

INPUT

AC Input Voltage	249-305 Volts, AC, 60 Hz. (277 Volts nominal)
Minimum Starting Voltage	235 Volts AC
Maximum RMS Operating Current @ 6300 Lumens + 0 - 7.5% (per ANSI Lamp Specifications)	.300 Amps
Maximum Starting Current	.350 Amps
Power Factor	.90 Leading minimum at full light output
Third Harmonic Distortion	Negligible
Surge Withstand Capability	Shall be capable of withstanding surge from a 6000V, 50KHz damped sine-wave, 50-ohm impedance source.

OUTPUT

Lamp Drive Frequency	(20 to 30) KHz
Lamp Operating Voltage	200 Volts nominal (100 per lamp)
Open Circuit Voltage	Open circuit voltage is 350 volts RMS for a maximum of 4 seconds or until lamp ignites. After 4 seconds if lamp has not ignited, open circuit voltage drops to 250 VRMS maximum.
Lamp Lumens	As rated by lamp manufacturer
Heater Voltage	2.5 to 4 Volts, proportional to inverter power
Lamp Crest Factor	1.48 ± 10%
Dimming Range	30 to 100%
Flicker Index	Zero
Percent Flicker	Zero
EMI	Projected to meet FCC Part 15
Lamp Type	F40T12 RS or F40T12 Low energy (35-watt)

DIMMING

The ballast shall have the capability of being dimmed either manually or automatically. Local dimming shall be accomplished with a simple adjustment on the ballast proper. Remote dimming shall be accomplished via a pair of low-voltage wires connected to a simple potentiometer. For U.L.-specified operation, an isolator module in the fixture is required. "Level of Service" dimming shall be accomplished with the proportional photocell module located appropriately. All external control signals shall be low-voltage (less than 36 volts), two-wire control. Dimming shall be over a 30-100% range and shall be smooth in operation with no noticeable flicker or other objectionable effects.

Appendix B

Power Variations of Core-Coil Ballast In Response to Lamp Wall Temperature

The input power for the normal operation of two 40-watt, T12, rapid-start fluorescent lamps with standard core-coil ballasts is 96 watts. The above condition prevails when the bulb wall temperture is 104°F (40°C). Measurements of the variation of input power with bulb wall temperature for different types of lamps and core-coil ballasts have been reported.[5] The results of this study are shown in Figure B.1. As the lamp wall temperature increases, the input power decreases. However, the light output also decreases more rapidly above 104°F, thereby decreasing the efficacy of the system.

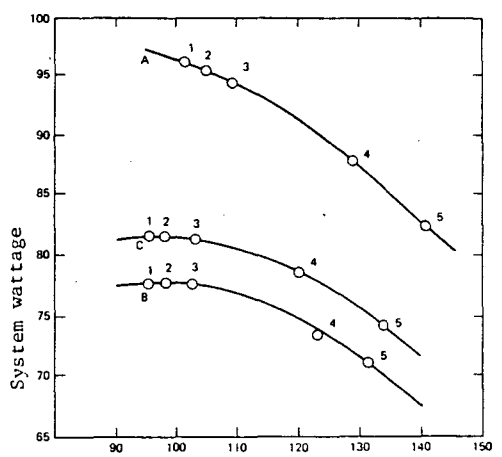

Bulb wall temperature (°F)

Where

A - F40 lamp on standard ballast
B - Improved 35W lamp on waveform modified ballast
C - 35W lamp on standard ballast
1 - Sphere (two lamps)
2 - Two-lamp industrial fixture
3 - Two-lamp strip
4 - Four-lamp troffer
5 - Four-lamp wrap-around

All fixtures at 77°F ambient

XBL 813-410

Figure B.1. System Wattage versus Bulb Wall Temperature.

This report was done with support from the Department of Energy. Any conclusions or opinions expressed in this report represent solely those of the author(s) and not necessarily those of The Regents of the University of California, the Lawrence Berkeley Laboratory or the Department of Energy.

Reference to a company or product name does not imply approval or recommendation of the product by the University of California or the U.S. Department of Energy to the exclusion of others that may be suitable.

TECHNICAL INFORMATION DEPARTMENT
LAWRENCE BERKELEY LABORATORY
UNIVERSITY OF CALIFORNIA
BERKELEY, CALIFORNIA 94720