LBL-12463 c.2

Lawrence Berkeley Laboratory

UNIVERSITY OF CALIFORNIA

RECEIVED
LAWRENCE
BERKELEY LABORATORY

MAY 6 1981

LIBRARY AND
DOCUMENTS SECTION

ENERGY & ENVIRONMENT DIVISION

Presented at the Conference on Coal Pyrolysis,
sponsored by the Electric Power Research Institute,
Palo Alto, CA, February 25-26, 1981

UPGRADING OF COAL HYDROCARBONIZATION LIQUIDS

Hubert G. Davis, John Potter, and Lou Batta

March 1981

TWO-WEEK LOAN COPY

This is a Library Circulating Copy which may be borrowed for two weeks. For a personal retention copy, call Tech. Info. Division, Ext. 6782.

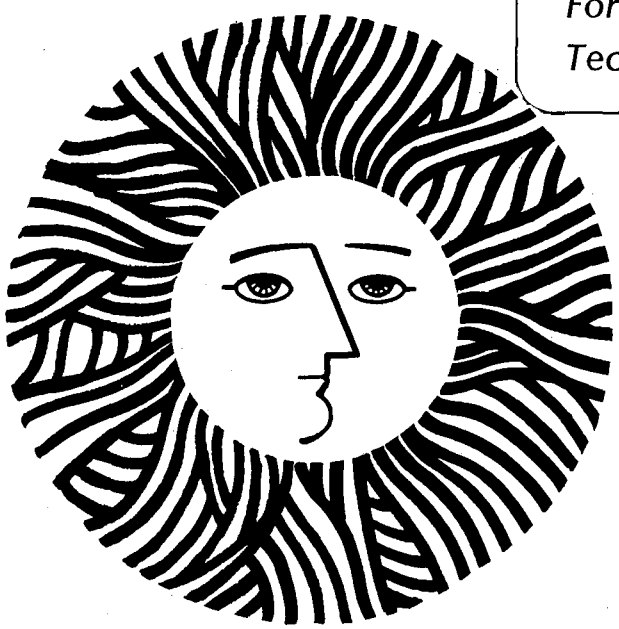

LBL-12463 c.2

Prepared for the U.S. Department of Energy under Contract W-7405-ENG-48

DISCLAIMER

This document was prepared as an account of work sponsored by the United States Government. While this document is believed to contain correct information, neither the United States Government nor any agency thereof, nor the Regents of the University of California, nor any of their employees, makes any warranty, express or implied, or assumes any legal responsibility for the accuracy, completeness, or usefulness of any information, apparatus, product, or process disclosed, or represents that its use would not infringe privately owned rights. Reference herein to any specific commercial product, process, or service by its trade name, trademark, manufacturer, or otherwise, does not necessarily constitute or imply its endorsement, recommendation, or favoring by the United States Government or any agency thereof, or the Regents of the University of California. The views and opinions of authors expressed herein do not necessarily state or reflect those of the United States Government or any agency thereof or the Regents of the University of California.

LBL-12463

UPGRADING OF COAL HYDROCARBONIZATION LIQUIDS

Hubert G. Davis
Lawrence Berkeley Laboratory
University of California
Berkeley, CA 94720

John Potter and Lou Batta
Union Carbide Corporation

A paper presented at the conference on Coal Pyrolysis

Sponsored by the Electric Power Research Institute
Palo Alto, California

February 25-26, 1981

ABSTRACT

In the mid-sixties, Union Carbide seriously considered building a 5000 ton/day plant to hydrocarbonize Wyoming subbituminous coal. The objective was the production of phenol and cresylic acids, with fuel byproducts. The work on upgrading the crude products is discussed briefly in the light of the earlier interest in chemical products and the current interest in synfuels.

The original attraction of the process as applied to low rank coal was the substantial yield of phenols. Today it might be the volatile nature of the liquid product. This offers the possibility of converting a high proportion of the crude product to gasoline.

INTRODUCTION

In the 1950's and 1960's, Union Carbide did extensive development on the hydrocarbonization of coals, especially coal from Lake de Smet, Wyoming (subbituminous C). This work was an extension of earlier work on liquid phase hydrogenation of coal and on straight pyrolysis. The hydrocarbonization process was, in effect, pyrolysis in a hydrogen atmosphere in a fluidized bed reactor. Pressures were moderate — 300 to 1000 psig — and temperatures were in the range of 480-600°C.

As compared to high pressure liquid-phase hydrogenation, hydrocarbonization appeared to offer economic advantages. There also were advantages in simplicity of operation and in the relatively low molecular weight of the liquid product. Many of the separation techniques which had been worked out during operation of a 300-ton/day hydrogenation unit were applicable to the hydrocarbonization product. A 1400/lb/hour pilot plant was built and operated and a 5000 ton per day plant to produce phenolics, plus fuel byproducts, was planned (1965). While the projected economics of this plant were marginally favorable, it could not compete with other investment opportunities in the capital climate of the mid-sixties. The plans were, therefore, dropped.

In this limited presentation we will cover very briefly the separations and upgrading steps planned in the sixties. Then we will suggest different directions more compatible with the present push toward synfuels.

PRODUCTS FROM HYDROCARBONIZATION

Although all ranks of coal, from lignites through low volatile bituminous, yield phenols on pyrolysis or hydrogenation, yields are at or near their peak in the subbituminous range. Table I shows a typical elemental analysis of Wyoming Lake de Smet coal. The oxygen is high (similar to North Dakota lignite) and the sulfur fairly low. The H/C atom ratio is 0.87 (typical of coals of a wide range of ranks). The typical ash content was about 10%. The sulfur content proved to be somewhat a function of the mineral matter, since roughly half the total was inorganic.

Table II shows a yield distribution. The hydrogen consumption (3 wt% of the MAF coal) is perhaps higher than would be judged most economical. However, liquid yields of above 20 wt% can be obtained with hydrogen consumption in the range of 1.5-2.0 lbs/100 lbs MAF coal.

Note that the gaseous product is rich in C_2-C_4's (mostly saturated). The distribution among the C_1-C_4 products is shown in Table III. At levels of severity of operation shown (50% char = lower, 40% char = higher), the proportion of C_2-C_4 in the gas is high. Actually it is slightly higher at the higher severity.

The gross distribution of the liquid products is shown in Table IV. Note that nearly half the liquid distills from IBP to 260°C and that only about 15% could be called vacuum resid. The relatively high volatility of the product compared to most liquid phase hydrogenation product or to low pressure pyrolysis product, is related to conditions of operation. The highest-boiling initial products are probably not sufficiently volatile at the pressure of operation. They remain in the system long enought to crack — or hydrocrack — to lower-boiling liquids plus gas and secondary char.

Note also the remarkably high content of phenols in the 130 to 260°C fraction. There are also substantial quantities of higher-boiling phenols in the middle and heavy volatile fractions and in the residue.

The 130-260°C fraction also contains nitrogen bases. The amount, while small, is significant, since the bases probably have to be removed. Certainly, if color-stable phenol products are to be made, the bases must be removed.

An analysis of the phenols from the above 130-260°C fraction is shown in Table V. About 25% is phenol itself and about 32% cresylics. The high proportion of lower-boiling phenols is related to hydrodealkylation activity during the process. The proportion can be lowered or raised, within limits, by changing the reaction severity. It should always be higher than in products from simple pyrolysis — although pyrolysis of low rank coals also gives phenols.

PRODUCT WORK-UP AS PLANNED IN 1965

As discussed above, the objective in the 1960's was production of phenols. Markets for C_8-phenols (xylenols) were limited and markets for higher pehnols appeared to be non-existent except perhaps for crude fractions. It was contemplated that residues above some boiling point — perhaps as low as 350°C (662°F) would be recycled to the reactor. Pilot plant experiments had shown that this was effective in converting such residues to lower-boiling products plus some secondary char.

Recovery of the phenols proceeded in two steps. First the nitrogen bases were extracted from the light oil fraction with aqueous SO_2 (see flowsheet - Fig. 1). The phenolics were than extracted from the raffinate by a process involving a recycle of a sodium phenolate solution (Fig. 2). This sequence had been operated very successfully in the Union Carbide 300 ton/day coal hydrogenation plant.

Extraction was to be followed, as in the 300 ton/day plant, by fractional distillation into phenol, cresols and other cuts appropriate for sale. The SO_2 extraction does not totally remove color-unstable bases. Also there are other color-unstable compounds present. Thus, when color-stable phenols are needed, it is necessary to do a final clean-up — e.g., distillation from a small amount of phosphoric acid.

Enhancement of the yields of phenol and cresols was planned by a thermal hydrodealkylation technique. You will recall that toluene and other alkylbenzenes can be converted to benzene by reacting with hydrogen over a wide range of temperatures and pressures. The reaction has been much studied. It is first order in toluene and half order in hydrogen. Fig. 3 shows an Arrhenius plot of the 3.2 order rate constant, $k_{3/2}$, for toluene covering 4 orders of magnitude of k, temperatures from 550 to 950°C and both high and low pressure. The data are from the literature(1) plus in-house sources.

When alkylphenols are hydrodealkylated, there is competition between the reactions removing alkyl and removing hydroxyl. Fig. 4, also based on Union Carbide and literature[2] data, shows Arrhenius plots of specific rates of reaction of cresols and phenols, with toluene for comparison. Ranges of temperature in which dealkylation is favored can be found. Also somewhat elevated pressures may be favorable, since removal of hydroxyl appears to be insensitive to hydrogen partial pressure.

A typical bench-scale run with a phenolic fraction obtained by hydrocarbonization is shown in Table VI. Both phenol and BTX are formed at reasonable efficiences. Presumably, at least some of the "higher-boiling" material formed could be profitably recycled, either to the hydrocarbonizor or the hydrodealkylator.

In this section, we also include a table (VII) giving some anlytical data on coal feed and char. This shows that the sulfur content of the char ran somewhat lower than that of the coal feed and that the nitrogen content is much the same in char and coal. Similarly, the sulfur percentage of the overall liquid ran about half the organic sulfur percentage of the original coal. In the liquids, the basic nitrogen — at least in the lighter fractions — can be reduced by an extraction process as illustrated in Fig. 1.

SITUATION TODAY

Even today, phenolics could be valuable products from a hydrocarbonization unit. However, the market for phenols other than phenol itself remains a limited one, which might well be satisfied by production from one or two rather small plants. Only phenol is a large world commodity. It herefore, seems clear that larger plants or multiple plants will be aimed at synfuels.

In this situation hydrocarbonization has a few advantages over liquefaction and pyrolysis which should be exploited. As compared to either alternative, hydrocarbonization tends to give a considerably more volatile liquid product. With the appropriate treatment, this should make it significantly more suitable for the production of automotive fuels and distillate oils. As compared to pyrolysis oils, hydrocarbon liquids are somewhat richer in dealkylated or partially dealkylated aromatics. They are also somewhat less unstable — the olefinic unsaturation is somewhat less. And the sulfur content will be somewhat lower.

Thus, if it weren't for the nitrogen and oxygen content (largely phenolic) the liquid products could be converted to high quality fractions by a light hydrotreating to reduce unsaturation and further lower the sulfur content. Unfortunately, removal of the oxygen content by hydrogenation requires much more drastic treatment. Also, since aromatic rings are saturated, hydrogen consumption is high. The extra hydrogen, plus additional from naphthenic hydrocarbons in the crude liquid, can be recovered in a reformer, but this requires another processing step.

Removal of the oxygen by hydrotreating has the advantage of allowing a high gasoline yield. The removal of oxygen drops boiling points, typically, 70 to 100°C. Almost all the large IBP to 260°C fraction (see Table IV) should wind up in the gasoline range, and perhaps a little of the middle oil also. Recycling, dealkylation or hydrocracking of the heavier fractions could increase this gasoline range.

One chemical reaction which has been suggested recently for upgrading phenol-containing fractions is alkylation. Conversion of phenols to methoxy- or ethoxy-aromatics, if it can be effectuated economically, has some advantages. The aromaticity of the phenolic compounds is maintained, excessive usage of hydrogen is avoided, and fuel-grade methanol or ethanol is incorporated into an automotive fuel. Methylation of phenols drops boiling points of the order of 15-30°C, so that phenolics from phenol (C_6) through about C_9 or C_{10} could be in the upper end of a gasoline fraction.

As was pointed out earlier, hydrocarbonization and pyrolysis liquid products — like other coal-derived liquids — contain nitrogen compounds. In the gasoline range these are almost entirely basic and can be extracted as discussed earlier. The lowest-boiling non-basic nitrogen compound of significance is indole (B.P. 254°C).

REFERENCES

(1) Silsby, R.I. and Sawyer, E.W., J. Appl. Chem., 6, 347-356 (1956)

(2) Davies, G.A. and Long, R., Ibid. 15, 117-127 (1965)

This work was supported by the Assistant Secretary for Conservation and Solar Energy, Office of Solar Applications for Industry, Biomass Energy Systems Division of the U.S. Department of Energy under Contract No. W-7405-ENG-48.

This work was funded through Battelle Pacific Northwest Laboratory, Lead Laboratory for the U.S. Department of Energy, Biomass Energy Systems Division, Thermochemical Conversion Program under Contract No. DE-AC06-76LO 1830.

TABLE I

ANALYSIS OF LAKE DE SMET COAL

ULTIMATE, MAF BASIS, WT. %

C	-	72.4
H	-	5.3
N	-	1.3
S	-	0.9
O	-	20.1

ASH, DRY BASIS 6 TO 18%.

H_2O, AS RECEIVED, 20-30%.

TABLE II

HYDROCARBONIZATION OF LAKE DE SMET COAL

TYPICAL GROSS YIELDS

AT HIGH LIQUID YIELD

PRODUCT	WEIGHT % OF MAF COAL FEED
CH_4	6
C_2 - C_4 GAS	5
C_5+ LIQUID	26
CO, CO_2	8.5
H_2S, NH_3	1
H_2O	15
CHAR	41.5
HYDROGEN	-3
TOTAL	100.0

TABLE III

DISTRIBUTION OF C_1 - C_4 HYDROCARBON PRODUCT

PRODUCT	WT. % IN C_1 - C_4 FRACTION	
	50% CHAR	40% CHAR
CH_4	56	52
C_2H_6	25	27
C_3H_8	13	14
C_4H_{10}	6	7

TABLE IV

TYPICAL COMPOSITION OF C_5^+ LIQUID PRODUCT

BOILING RANGE	WT. % OF C_5^+	
IBP - 130°C	10.0	
130 - 260	40.6	26.6 PHENOLICS 1.2 BASES 12.8 HYDROCARBONS
260 - 340	13.6	
340 - 530	21.3	
>530	14.5	
TOTAL	100.0	

% H	-	7.5
% C	-	85.2
% S	-	0.2
% N	-	1.1
% O	-	6.0

HEAT OF COMBUSTION, 16,000 BTU/LB. (8895 CAL/GM)

TABLE V

COMPOSITION OF 130° - 260°C PHENOLICS

COMPONENT	WT. %
PHENOL	25.3
o-CRESOL	9.5
m-CRESOL	16.6
p-CRESOL	5.9
ETHYLPHENOLS	9.2
IDENTIFIED XYLENOLS	7.1
OTHER PHENOLS TO 225°C	9.0
TAR ACIDS 225° - 260°C	17.4
	100.0

TABLE VI

THERMAL HYDRODEALKYLATION OF CRESYLIC ACIDS FROM WYOMING COAL

CONDITIONS:

AVE. TEMP. - 654°C
RES. TIME - 30.3 SEC.
PRESSURE - 250 PSIG
H_2/FEED - 2.0 MOLS/MOL = 4G/116G

COMPONENT	IN	OUT	(WT. % OF FEED)
BTX	0.0	11.1	
PHENOL	0.9	16.9	
CRESOLS	47.7	37.7	
XYLENOLS	46.2	13.7	
HIGHER BOILING	5.2	15.2	
WATER	0.0	2.2	
TOTAL	100.0	96.8	
CH_4^+	--	3.9	

NET CONVERSION OF CRESOL/XYLENOL FRACTION	45%	
PHENOL EFFICIENCY (1,2)	38%	47%
BTX EFFICIENCY	26%	34%

(1) - WT. % (PHENOL GAIN/CRES-XYL LOSS)
(2) - MOL % (PHENOL GAIN/CRES-XYL LOSS)

TABLE VII

HYDROCARBONIZATION OF LOW ASH LAKE DE SMET COAL AT VARIOUS TEMPERATURES

Analyses of Feed Coal and Hydrocarbonized Char

Run Number	1-39	1-37	1-41
Hydrocarbonization Temp., °C	511	543	567

Ultimate Analysis, Weight Per Cent MAF Coal and Char

Element			
Lake de Smet Feed Coal			
C	73.0	73.5	72.1
H	5.3	5.3	5.2
N	1.0	1.0	1.3
S	0.9	0.9	1.0
O (by difference)	19.8	19.3	20.4
% Ash, dry basis	9.0	9.3	9.5
Hydrocarbonized Char			
C	88.1	92.0	93.0
H	4.1	4.0	3.8
N	1.3	1.3	1.3
S	0.6	0.6	0.6
O (by difference)	5.9	2.1	1.3

FIGURE 1

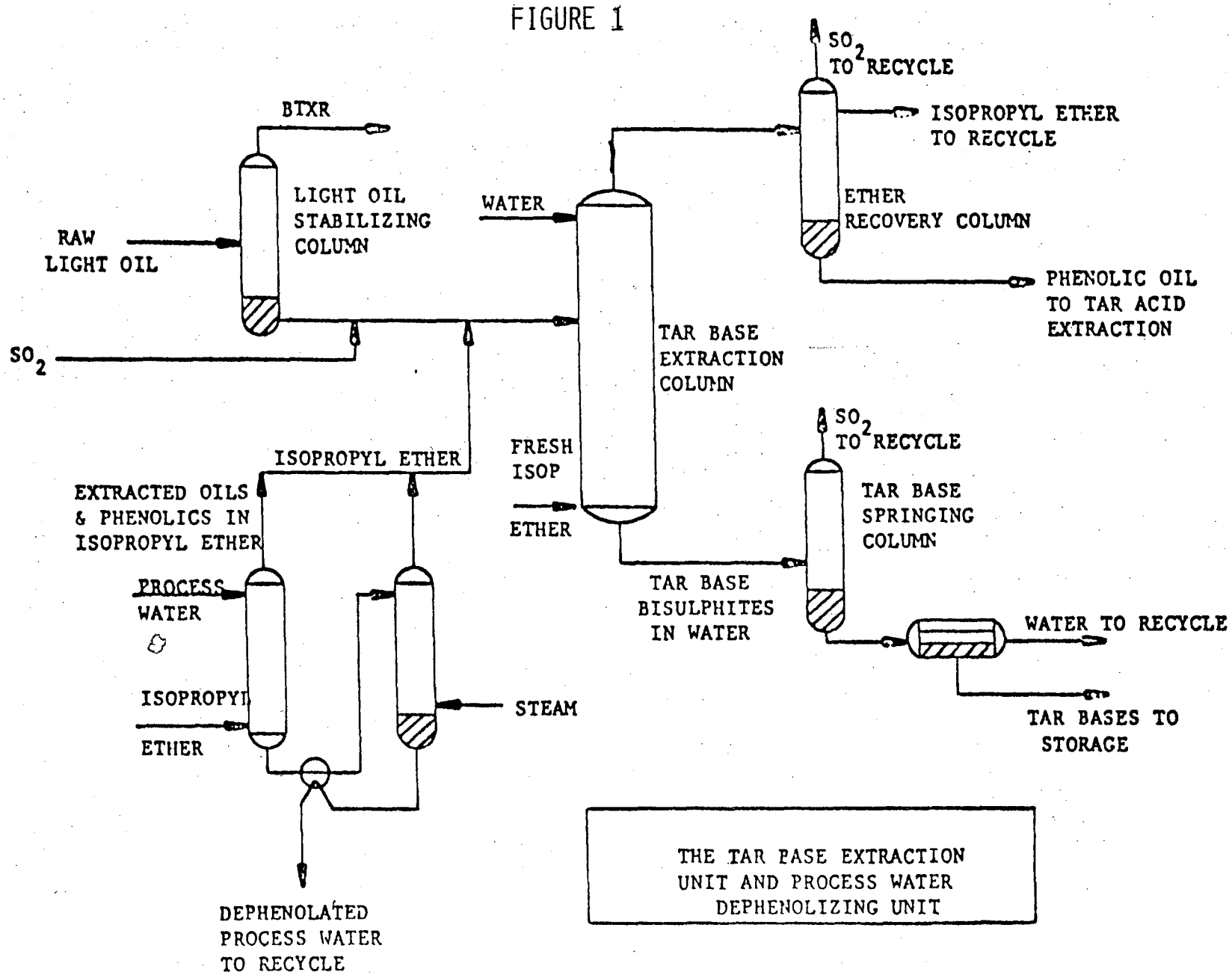
BTXR
LIGHT OIL STABILIZING COLUMN
RAW LIGHT OIL
SO_2
WATER
TAR BASE EXTRACTION COLUMN
SO_2 TO RECYCLE
ISOPROPYL ETHER TO RECYCLE
ETHER RECOVERY COLUMN
PHENOLIC OIL TO TAR ACID EXTRACTION
ISOPROPYL ETHER
EXTRACTED OILS & PHENOLICS IN ISOPROPYL ETHER
PROCESS WATER
ISOPROPYL ETHER
FRESH ISOP ETHER
TAR BASE BISULPHITES IN WATER
SO_2 TO RECYCLE
TAR BASE SPRINGING COLUMN
WATER TO RECYCLE
TAR BASES TO STORAGE
STEAM
DEPHENOLATED PROCESS WATER TO RECYCLE
THE TAR BASE EXTRACTION UNIT AND PROCESS WATER DEPHENOLIZING UNIT

FIGURE 2

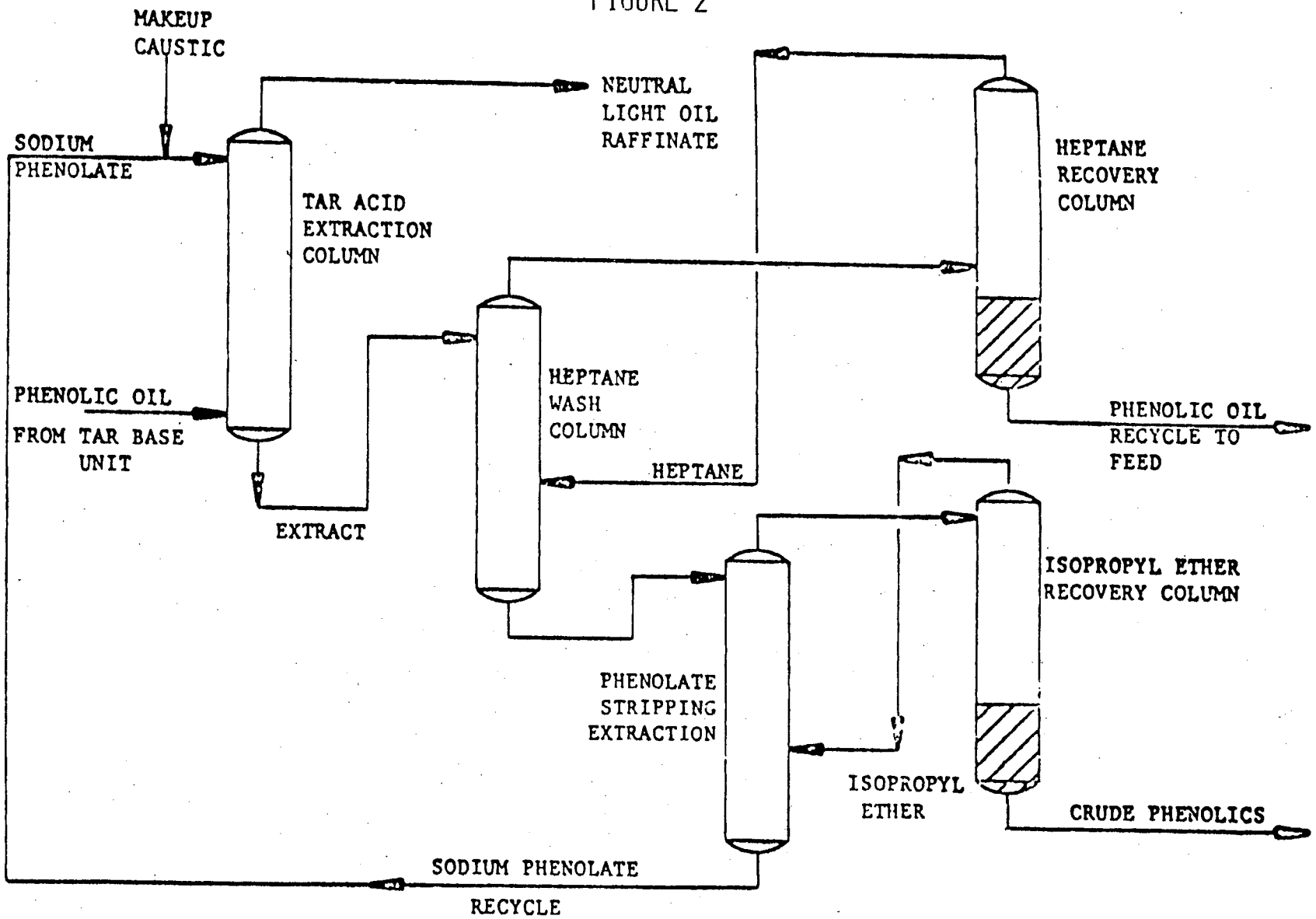

TAR ACID EXTRACTION UNIT

FIGURE 3

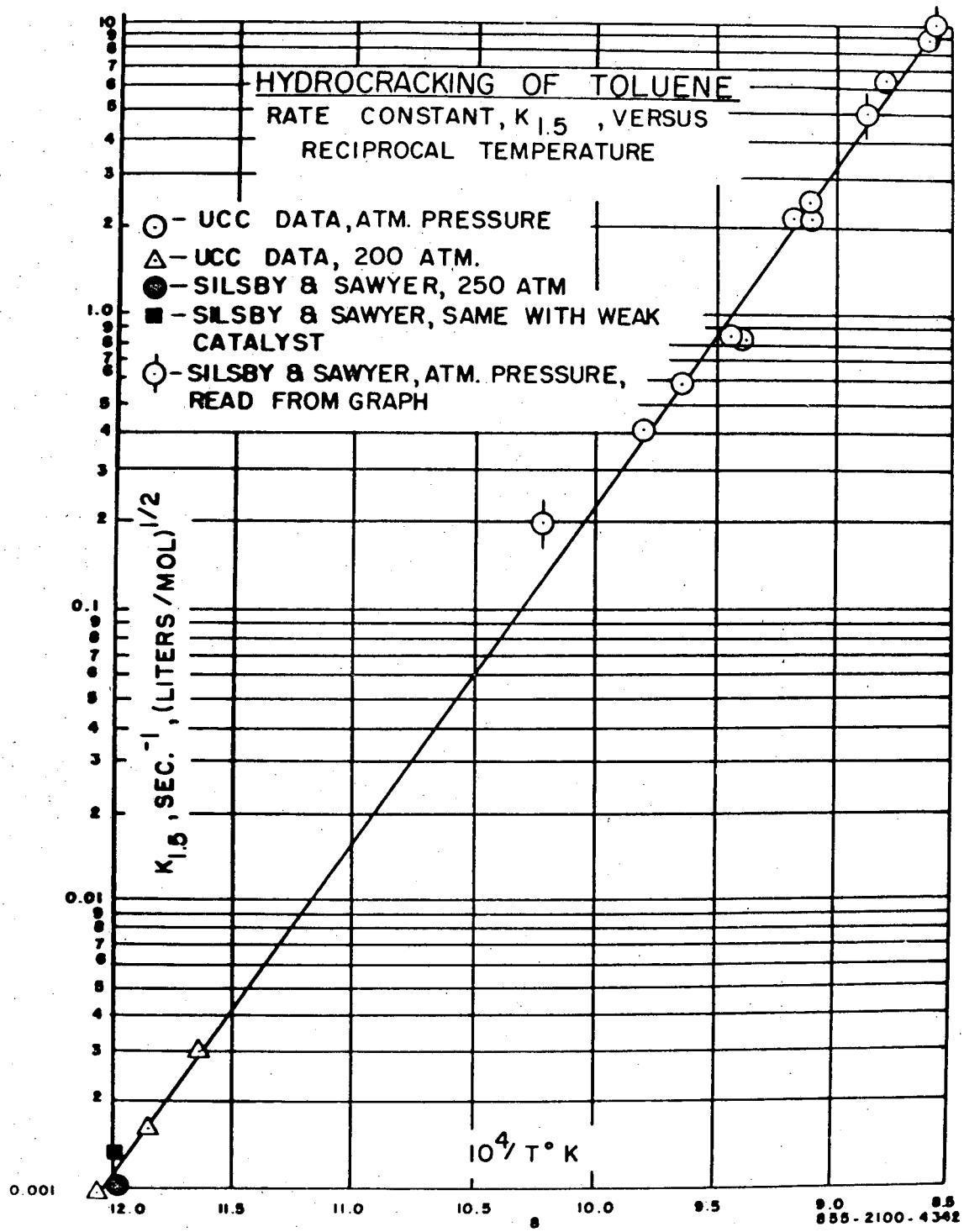
HYDROCRACKING OF TOLUENE
RATE CONSTANT, $K_{1.5}$, VERSUS
RECIPROCAL TEMPERATURE
⊙ - UCC DATA, ATM. PRESSURE
△ - UCC DATA, 200 ATM.
● - SILSBY & SAWYER, 250 ATM
■ - SILSBY & SAWYER, SAME WITH WEAK CATALYST
⊙ - SILSBY & SAWYER, ATM. PRESSURE, READ FROM GRAPH
$K_{1.5}$, SEC.$^{-1}$, (LITERS/MOL)$^{1/2}$
$10^4/T°K$
10
1.0
0.1
0.01
0.001
12.0
11.5
11.0
10.5
10.0
9.5
9.0
8.5
855-2100-4342

FIGURE 4

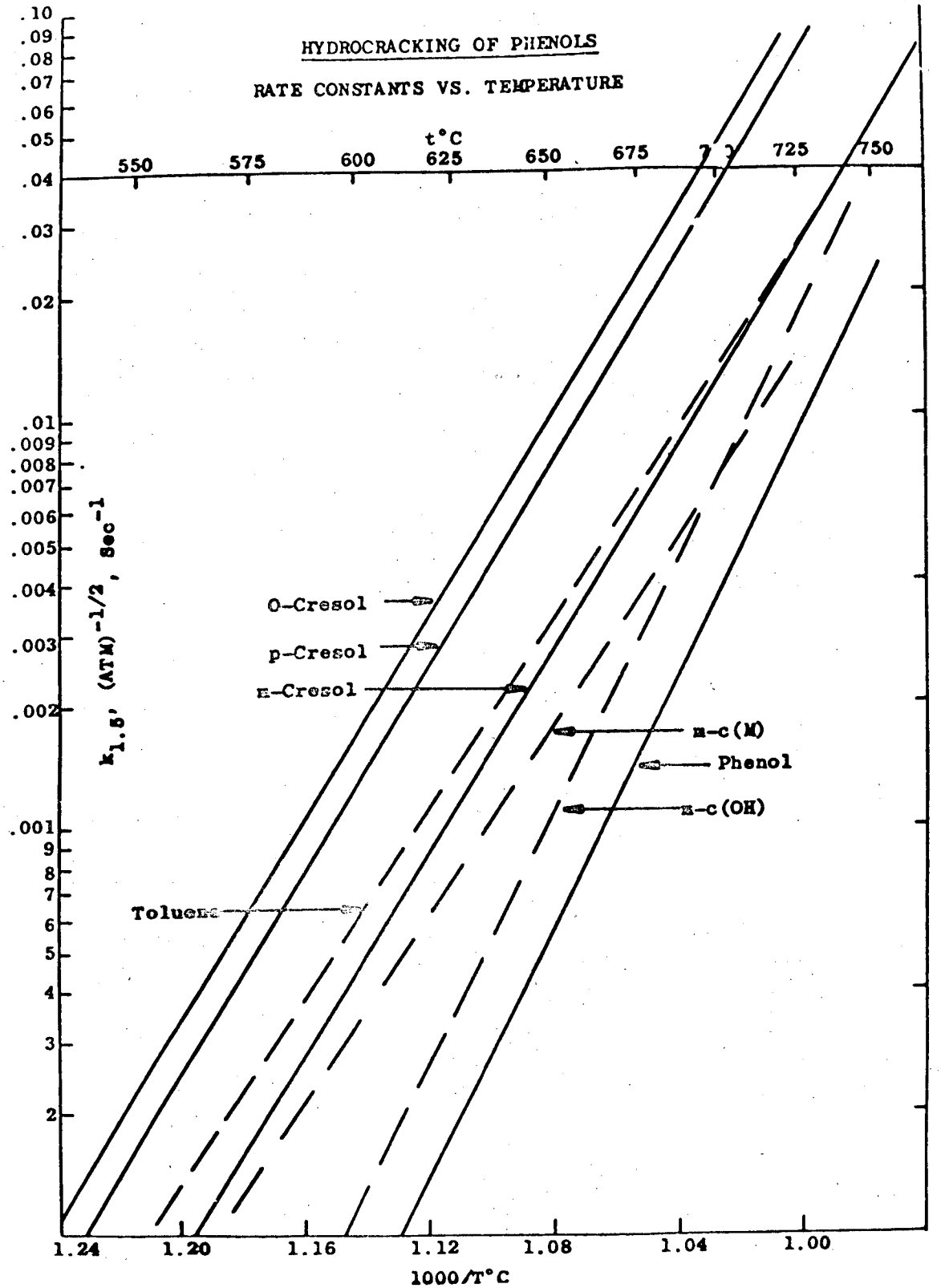
HYDROCRACKING OF PHENOLS
RATE CONSTANTS VS. TEMPERATURE
t°C
550
575
600
625
650
675
725
750
.10
.09
.08
.07
.06
.05
.04
.03
.02
.01
.009
.008
.007
.006
.005
.004
.003
.002
.001
9
8
7
6
5
4
3
2
$k_{1.5}$, $(ATM)^{-1/2}$, Sec^{-1}
O-Cresol
p-Cresol
m-Cresol
m-c(M)
Phenol
m-c(OH)
Toluene
1.24
1.20
1.16
1.12
1.08
1.04
1.00
1000/T°C

This report was done with support from the Department of Energy. Any conclusions or opinions expressed in this report represent solely those of the author(s) and not necessarily those of The Regents of the University of California, the Lawrence Berkeley Laboratory or the Department of Energy.

Reference to a company or product name does not imply approval or recommendation of the product by the University of California or the U.S. Department of Energy to the exclusion of others that may be suitable.

TECHNICAL INFORMATION DEPARTMENT
LAWRENCE BERKELEY LABORATORY
UNIVERSITY OF CALIFORNIA
BERKELEY, CALIFORNIA 94720