LBL-12568 c.2
Preprint

Lawrence Berkeley Laboratory
UNIVERSITY OF CALIFORNIA

Submitted to Physical Review Letters

COHERENT AND INCOHERENT PROCESSES IN PROJECTILE FRAGMENTATION

W.D. Rae, A.J. Cole, A. Dacal, R. Legrain,
B.G. Harvey, J. Mahoney, M.J. Murphy,
R.G. Stokstad and I. Tserruya

RECEIVED
LAWRENCE
BERKELEY LABORATORY

MAY 20 1981

LIBRARY AND
DOCUMENTS SECTION

April 1981

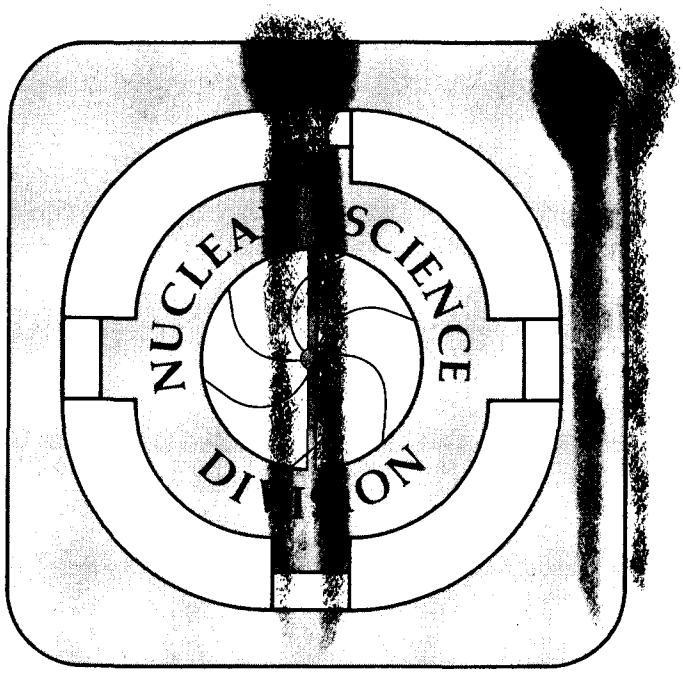

Prepared for the U.S. Department of Energy under Contract W-7405-ENG-48

LBL-12568 c.2

DISCLAIMER

This document was prepared as an account of work sponsored by the United States Government. While this document is believed to contain correct information, neither the United States Government nor any agency thereof, nor the Regents of the University of California, nor any of their employees, makes any warranty, express or implied, or assumes any legal responsibility for the accuracy, completeness, or usefulness of any information, apparatus, product, or process disclosed, or represents that its use would not infringe privately owned rights. Reference herein to any specific commercial product, process, or service by its trade name, trademark, manufacturer, or otherwise, does not necessarily constitute or imply its endorsement, recommendation, or favoring by the United States Government or any agency thereof, or the Regents of the University of California. The views and opinions of authors expressed herein do not necessarily state or reflect those of the United States Government or any agency thereof or the Regents of the University of California.

COHERENT AND INCOHERENT PROCESSES IN PROJECTILE FRAGMENTATION*

W. D. Rae, A. J. Cole, A. Dacal[(a)], R. Legrain[(b)], B. G. Harvey
J. Mahoney, M. J. Murphy, R. G. Stokstad and I. Tserruya[(a)]

Lawrence Berkeley Laboratory
University of California
Berkeley, California 94720

April 1981

ABSTRACT

We present experimental results for the breakup of 140 MeV ^{16}O into $^{12}C + \alpha$ by a ^{12}C target. Two mechanisms can be distinguished: the coherent excitation of the ^{16}O projectile to components of the giant resonance states and the quasi-free scattering of the α or ^{12}C constituents of the ^{16}O projectile by the target.

- - - - - - -

There has been much activity in the field of projectile fragmentation.[1-8] While considerable theoretical effort has been devoted to light-ion fragmentation,[2] only recently have heavy-ion reactions at energies $\lesssim$ 20 MeV/A received attention.[3,4] The simplest case that can be studied is binary breakup where only two projectile fragments are produced. Binary breakup has been classified as either sequential or direct.[5] Sequential breakup is

associated with decay from excited states of the projectile, while direct breakup describes those events for which the relative kinetic energy of the two fragments is not necessarily correlated with an excited state of the projectile. Both mechanisms have been observed[5] in the breakup of ^{7}Li. Sequential processes have been identified also in the breakup of heavier ions[6] but no clear separation of direct and sequential processes has been experimentally observed in heavy ion reactions.[7]

Our recent analysis[8] of the ground state (Q = -7.16 MeV) breakup of 140 MeV ^{16}O + α revealed only sequential processes. We continued these studies in an attempt to identify a direct process. Our new data do reveal two mechanisms responsible for the breakup of ^{16}O into ^{12}C + α and they suggest a classification different from that implied by the terms "sequential" and "direct".

Although the experiment and analysis were similar in principle to those described in Ref. 8, the introduction of position-sensitive detectors made possible the use of large solid angles without loss of angular resolution ($\lesssim 0.2^{\circ}$ lab) (see Fig. 1). The ΔE-E telescopes, 10 mm and 40 mm in diameter, recorded the horizontal position (ΔE) and the vertical position (E) of each fragment. The beam, 140 MeV ^{16}O, was supplied by the LBL 88-Inch Cyclotron. For each coincident event, two quantities were determined: the sum $E_T = E_\alpha + E_{^{12}C}$ which is related to the reaction Q_3-value, and E_{rel}, the relative kinetic energy of the α and the ^{12}C in their center-of-mass system.

The spectrum of E_T and the spectra of E_{rel} for different values of E_T are shown in Figs. 2 and 3. For the highest E_T bin, which corresponds to $Q_3 = -7.16$ MeV, the relative kinetic energy can be associated unambiguously with an excitation energy in ^{16}O. For other E_T bins, however, there is an ambiguity since it is not clear whether the target or a projectile fragment has been left in an excited state. For $Q_3 = -7.16$ MeV, states at the following energies in ^{16}O are clearly observed: 9.88 (2^+), 10.36 (4^+), 11.06 (4^+), 11.52 (2^+), 12.41 (1^-), 13.10 (2^+), 14.00 (0^+) and 15.60 MeV (3^-). Very weak states are seen at 14.83 (6^+), 17.92 (4^+) and 18.50 MeV (2^+). For $Q_3 = -11.60$ MeV an additional strong peak is observed which corresponds either to a state in ^{16}O at 12.70 MeV or, more probably,[9] to a state at 17.14 MeV (2^+) which decayed to $\alpha + {}^{12}C$ (4.44 MeV). Many of these states can be associated with known levels[10] of ^{16}O and these assignments are given in Figs 2 and 3.

There is a marked qualitative change in the spectra of E_{rel} for values of $Q_3 < -11.6$ MeV: only the states at 9.85, 10.35, and 11.10 MeV and a broad background extending beyond $E_{rel} = 14$ MeV are observed. Significantly, these three states are the only states consistently observed in our data which are populated in α-transfer reactions on ^{12}C.[11] Furthermore, with the exception of the state at 15.60 MeV, all other strong states observed for low $|Q_3|$-values and the state at 18.48 MeV are excited stongly in $^{16}O(\alpha,\alpha')$,[9] $^{16}O(e,e')$[10] or $^{15}N(p,\gamma)$[10]

reactions. From Fig. 3 it is apparent that these collective states have an excitation probability which is a strong function of E_T (or Q_3) while the background and the three states at 9.85, 10.35 and 11.10 MeV are populated more uniformly for all E_T-values.

Clearly, therefore, the mechanism which excites the background and the states at 9.85, 10.35 and 11.10 MeV must be different from that which excites the collective states. Collective excitation of the projectile involves the coherent response of the whole projectile to the field of the target nucleus, thereby exciting components of the giant resonance states; for low multipoles, $Q \approx 0$ is the optimum matching condition. Thus we term the excitation and decay of these states "coherent breakup".

Now, the three states which are also observed in α-transfer reactions are those which might be expected to be observed in a quasi-free scattering of the α and ^{12}C constituents of the ^{16}O to the continuum via the individual interaction of either constituent with the target. Since the α and ^{12}C constituents are assumed to interact independently with the target we term this mechanism "incoherent breakup."

In a plane wave Born approximation, neglecting the identity of the two ^{12}C nuclei in the final state, the transition matrix element for incoherent breakup is $T_{fi} = \langle \Psi_f | V_{P_1T} | \Psi_i \rangle + \langle \Psi_f | V_{P_2T} | \Psi_i \rangle$ where V_{P_iT} represents the interaction of

each projectile constituent P_i with the target nucleus. Here $|\Psi_i\rangle = \sum_\gamma e^{i\underline{k}_i\cdot\underline{R}}\,\chi_\gamma(\underline{r})\,\phi^\alpha\phi^c_\gamma\phi^T_i$ and $|\Psi_f\rangle = \sum_\beta e^{i\underline{k}_f\cdot\underline{R}}\,\chi^{(-)}_{\beta:\beta_f}(\underline{r})\,\phi^\alpha\phi^c_\beta\phi^T_f$, where ϕ^α, ϕ^c_ρ and ϕ^T represent the internal wavefunctions of the α, ^{12}C and target respectively and ρ runs over the excited states of the ^{12}C. We omit a similar index for the α particle. The relative coordinate between the target and the center of mass of the α + ^{12}C system is denoted by $\underline{R}$. The wavefunctions $\chi_\gamma(\underline{r})$ describe the initial bound state of the two projectile constituents. The usual spectroscopic amplitudes are contained in the normalization of these wavefunctions. The wavefunctions $\chi^{(-)}_{\beta:\beta_f}(\underline{r})$ describe the relative motion of the α and ^{12}C fragments in the continuum, β_f defining the excited state of the detected ^{12}C. It must be emphasized that the wavefunctions $\chi^{(-)}_{\beta:\beta_f}(\underline{r})$ will contain <u>both</u> resonant and non-resonant components which will be reflected in the transition amplitude, T_{fi}. We associate the three states in Fig. 3 which appear at all Q_3 values with the resonant components of these wavefunctions and the background with the non-resonant components. Thus the incoherent breakup process includes resonant and non-resonant transitions.

The incoherent process can further be classified as elastic when there is no excitation of the target and no change in state of the ^{12}C constituent. Elastic breakup is thus described by the components of T_{fi} with ($\phi^T_i = \phi^T_f$) and $\gamma = \beta_f$.

It can be classified as inelastic when there is excitation of the target ($\phi_i^T \neq \phi_f^T$) and /or a change in state of the ^{12}C constituent, viz., components of T_{fi} with $\gamma \neq \beta_f$. For heavy-ion reactions, elastic and inelastic processes are not experimentally distinguishable since Q_3 depends on β_f and not on γ. For example, in our data elastic and inelastic breakup processes may contribute to events with -14.53 MeV $< Q_3 < -7.16$ MeV. For elastic events with more negative Q_3 - values, the ^{12}C fragment from the ^{16}O is unbound so only inelastic processes may contribute to $^{12}C - \alpha$ coincidences for $Q_3 < 14.53$ MeV.

In conclusion, our experimental data reveal the presence of two mechanisms in the breakup of ^{16}O into $^{12}C + \alpha$: a coherent process which excites the projectile to states whose structure is related to that of the ground state via a multipole operator, and the incoherent process involving the independent interaction of separate constituents of the projectile with the target. The incoherent amplitude contains resonant contributions at relative energies corresponding to specific excited states of the projectile as well as a non-resonant contribution.

This work was supported by the Director, U.S. Office of Energy Research, Division of Nuclear Physics of the Office of High Energy and Nuclear Physics, and by Nuclear Sciences of the Basic Energy Sciences Program of the U.S. Department of Energy under Contract No. W-7405-ENG-48.

FOOTNOTES AND REFERENCES

(a) Permanent address: U.N.A.M. Instituo de Fisica, Mexico.

(b) Permanent address: DPhN-BE, CEN Saclay, F-91190 Gif-sur-Yvette, France.

(c) Permanent address: Weizmann Institute, Rehovot, Israel.

1. D. K. Scott, in Proceedings of the International Conference on Nuclear Physics, Berkeley, CA., August 1980 (to be published).

2. A. Budzanowski, G. Baur, R. Shyam, J. Bojowald, W. Oelert, G. Riepe, M. Rogge, P. Turek, F. Rösel and D. Trautmann, Z. Phys. A293 293 (1979).

3. T. Udagawa, T. Tamura, T. Shimoda, H. Fröhlich, M. Ishihara and K. Nagatani, Phys. Rev. C20 1949 (1979).

4. K. W. McVoy and M. C. Nemes, Z. Phys. A295 177 (1980).

5. A. C. Shotter, A. N. Bice, J. M. Wouters. W. D. Rae and J. Cerny, Phys. Rev. Lett 46 12 (1981).

6. J. van Driel, S. Gonggrijp, R. V. F. Janssens, R. H. Siemssen, K. Siwek-Wilczynska and J. Wilczynski, Phys. Lett. 98B 351 (1981).

7. M. Bini, C. K. Gelbke, D. K. Scott, T. J. M. Symons, P. Doll, D. L. Hendrie, J. L. Laville, J. Mahoney, M. C. Mermaz, C. Olmer, K. Van Bibber and H. H. Wieman, Phys. Rev. C22 1945 (1980).

8. W. D. Rae, R. G. Stokstad, B. G. Harvey, A. Dacal, R. Legrain, J. Mahoney, M. J. Murphy and T. J. M. Symons, Phys. Rev. Lett. 45 884 (1980).

9. M. N. Harakeh, A. R. Arends, M. J. A. DeVoigt, A. G. Drentje, S. Y. Van der Werf and A. Van der Woude, Nucl. Phys. A265 189 (1976).

10. F. Ajzenberg-Selove, Nucl. Phys. A281 1 (1977)

11. The 10.35 MeV state can be populated directly by α-transfer whereas the 9.85 and 11.10 MeV states are populated via the excitation of ^{12}C to 4.44 MeV. See, for example:- P. T. Debevec, H. T. Fortune, R. E. Segel and J. F. Tonn, Phys. Rev. C9, 2451, (1974) and A. Arima, H. Horiuchi and T. Sebe, Phys. Lett. 24B, 129, (1967).

FIGURE CAPTIONS

Fig. 1. Schematic diagram of experimental apparatus.

Fig. 2. $E_T = E_\alpha + E_{^{12}C}$ and E_{rel} spectra (as defined in text) for Q = -7.16 MeV. Excitation energies [taken from Ref. 10 and deduced from this experiment] refer to ^{16}O and are in MeV.

Figl 3. E_{rel} spectra for various E_T gates. There is a detection threshold at $E_{rel} \approx 2.5$ MeV. The data have not been adjusted for coincidence efficiency which is a strong function of E_{rel} but depends weakly on E_T.

Schematic Diagram of Experimental Setup

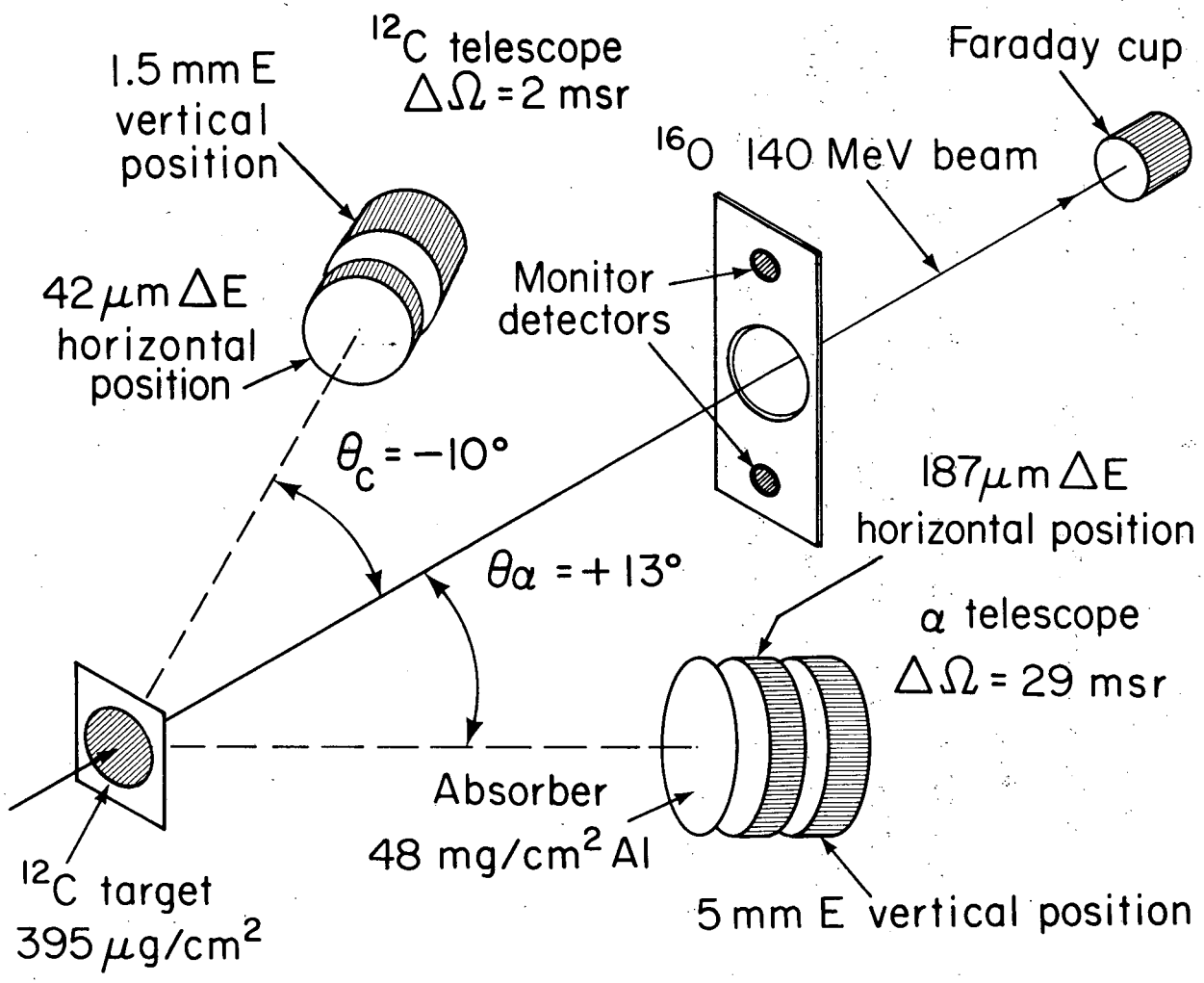

XBL 814-653

Fig. 1.

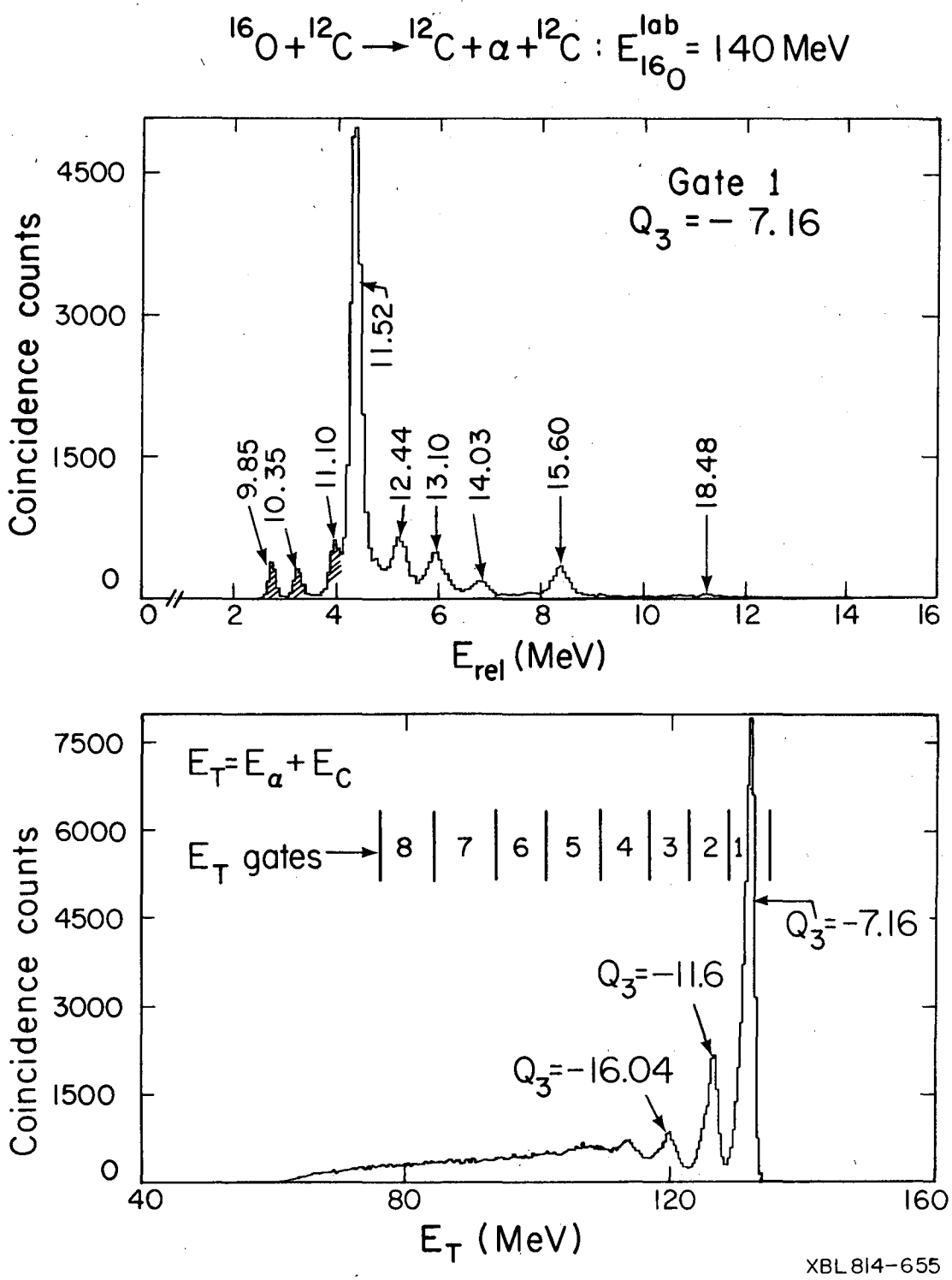
$^{16}O + ^{12}C \rightarrow ^{12}C + \alpha + ^{12}C : E^{lab}_{^{16}O} = 140$ MeV
Gate 1
$Q_3 = -7.16$
Coincidence counts
4500
3000
1500
0
9.85
10.35
11.10
11.52
12.44
13.10
14.03
15.60
18.48
0
2
4
6
8
10
12
14
16
E_{rel} (MeV)
$E_T = E_\alpha + E_C$
E_T gates
8
7
6
5
4
3
2
1
$Q_3 = -7.16$
$Q_3 = -11.6$
$Q_3 = -16.04$
7500
6000
4500
3000
1500
0
40
80
120
160
E_T (MeV)
XBL 814-655

Fig. 2

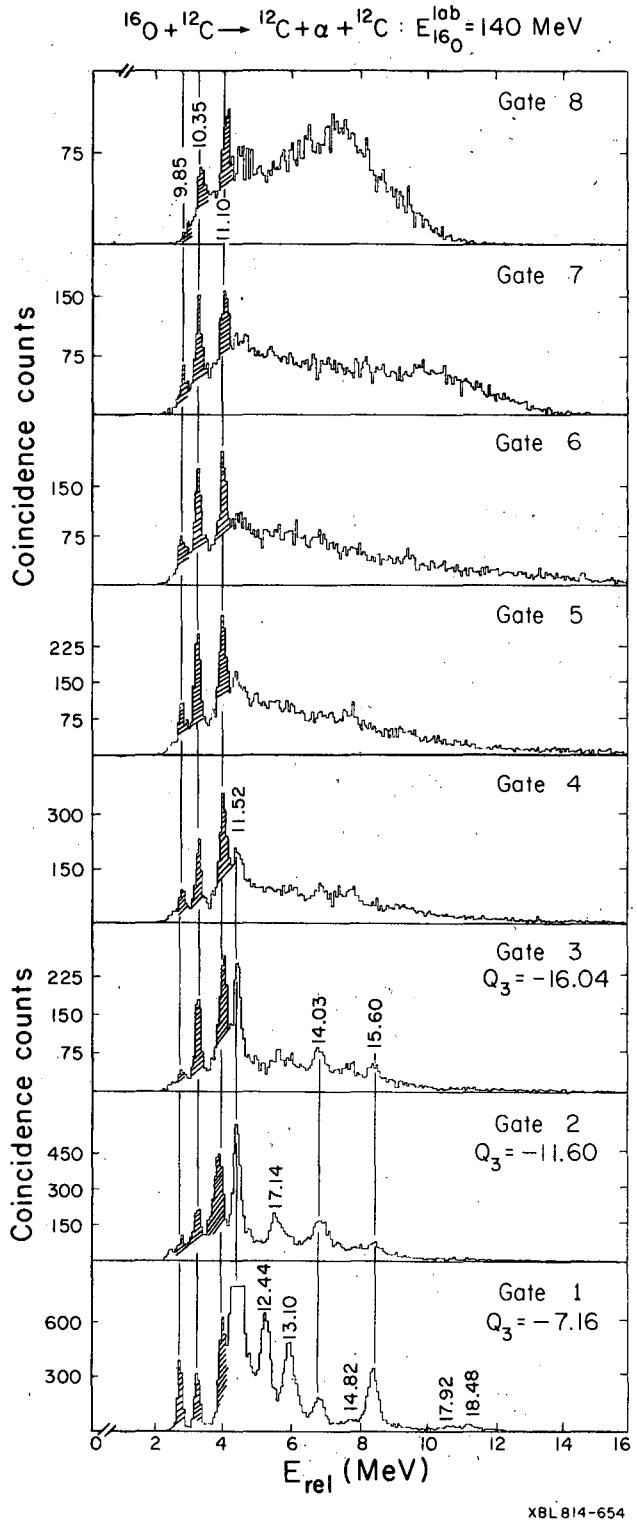
$^{16}O + ^{12}C \rightarrow ^{12}C + \alpha + ^{12}C$: $E^{lab}_{^{16}O}$ = 140 MeV
Gate 8
Gate 7
Gate 6
Gate 5
Gate 4
Gate 3
Q_3 = −16.04
Gate 2
Q_3 = −11.60
Gate 1
Q_3 = −7.16
9.85
10.35
11.10
11.52
14.03
15.60
17.14
12.44
13.10
14.82
17.92
18.48
Coincidence counts
E_{rel} (MeV)
XBL 814-654

Fig. 3

This report was done with support from the Department of Energy. Any conclusions or opinions expressed in this report represent solely those of the author(s) and not necessarily those of The Regents of the University of California, the Lawrence Berkeley Laboratory or the Department of Energy.

Reference to a company or product name does not imply approval or recommendation of the product by the University of California or the U.S. Department of Energy to the exclusion of others that may be suitable.

TECHNICAL INFORMATION DEPARTMENT
LAWRENCE BERKELEY LABORATORY
UNIVERSITY OF CALIFORNIA
BERKELEY, CALIFORNIA 94720