Submitted to Nuclear
Instruments and Methods

RECEIVED
LAWRENCE
RADIATION LABORATORY

LIBRARY AND
DOCUMENTS SECTION

LBL-1264
Preprint c.1

DESIGN OF A HIGH-TEMPERATURE NEUTRON IRRADIATION CONTAINER

Darrell C. Fee and Samuel S. Markowitz

October 1972

Prepared for the U.S. Atomic Energy Commission
under Contract W-7405-ENG-48

For Reference

Not to be taken from this room

LBL-1264
c.1

DISCLAIMER

This document was prepared as an account of work sponsored by the United States Government. While this document is believed to contain correct information, neither the United States Government nor any agency thereof, nor the Regents of the University of California, nor any of their employees, makes any warranty, express or implied, or assumes any legal responsibility for the accuracy, completeness, or usefulness of any information, apparatus, product, or process disclosed, or represents that its use would not infringe privately owned rights. Reference herein to any specific commercial product, process, or service by its trade name, trademark, manufacturer, or otherwise, does not necessarily constitute or imply its endorsement, recommendation, or favoring by the United States Government or any agency thereof, or the Regents of the University of California. The views and opinions of authors expressed herein do not necessarily state or reflect those of the United States Government or any agency thereof or the Regents of the University of California.

0 0 0 0 3 8 0 7 7 4 4

DESIGN OF A HIGH-TEMPERATURE NEUTRON IRRADIATION CONTAINER*

Darrell C. Fee and Samuel S. Markowitz

Department of Chemistry and
Lawrence Berkeley Laboratory
University of California
Berkeley, California 94720

October 1972

Abstract

The design and construction of a neutron irradiation container in which all samples receive the same total neutron dose and the temperature is controlled to ± 0.5 °C in the 25 °C to 200 °C range is reported.

*Work performed under the auspices of the U. S. Atomic Energy Commission.

1. Introduction

The temperature of the sample during irradiation is an important parameter in radiation chemistry[1]) and hot atom chemistry[2]). The primary and secondary processes being studied may be temperature dependent. In addition, the phase (gas, liquid or solid) or the sample during irradiation is obviously temperature dependent. Temperature control during irradiation may be advantageous in activation analysis[3]). Numerous low temperature irradiation devices have been reported. Neutron irradiations using these cooling devices have been made at: liquid nitrogen[4]) and liquid helium[5]) temperatures, any temperature between 12 °K and 25 °K[6]) and any temperature from 25 °C down to -30 °C[7]) or -75 °C[8]). Gamma irradiations have been made at any temperature from 15 °C to -196 °C[9]). The same gamma irradiation container could have easily been adapted for use at higher than ambient temperatures (up to 150 °C). High temperature neutron irradiations have also been made[10,11]). Temperature control in the 250 °C to 800 °C range has been achieved. A variable pressure gas gap around the sample controlled the rate of the loss of the heat that was generated in the sample by neutron absorption. The sample was essentially self-heated.

We are interested in hot-atom chemistry in general and recoil tritium reactions in particular. In hot-atom chemistry it is often desirable to irradiate many samples simultaneously. This ensures that all the samples in a series are irradiated under the same experimental conditions. The important experimental parameters during irradiation are temperature (as discussed previously) and total neutron dose. Inter-sample comparisons of absolute product yields can only be made if each sample receives the same neutron

dose[2,12]). Furthermore, it is advantageous if these temperature and dose-controlled irradiations could be made in the most commonly available neutron irradiation facility, a pool type nuclear reactor. Dose-controlled hot-atom studies are easily made at pool temperatures using the "Lazy Susan" facility[13]). Previously mentioned low temperature irradiation techniques are readily adapted to allow low temperature, dose-controlled hot-atom studies[14]). The high temperature irradiation techniques mentioned earlier cannot be adapted to hot-atom studies because little heat is generated in the hot-atom sample by neutron bombardment. Hot-atom studies have been made at temperatures higher than pool temperature. The irradiations were made with the samples in an oil bath on a hot plate in the dry irradiation facility (Hohlraum or exposure room) of the reactor. These studies were limited because the neutron dose varied with sample position[15]). Reported here is the design and constructure of an irradiation container in which all samples receive the same total neutron dose and the temperature is controlled, to ± 5 °C in the 25 °C to 200 °C range.

2. Apparatus

The design concept was simple. The samples would be irradiated in a temperature-controlled oil bath placed in the Hohlraum of the reactor. The samples would be rotated so that each sample received the same neutron dose. The rotation could be achieved by directly coupling a motor to the sample rack. This would require neutron shielding to protect the motor. This is shown in Fig. 1.

Figure 1 is a cut-away side view of the apparatus. All materials are 1100 F aluminum (> 99% pure) unless stated otherwise. Constructing the irradiation container chiefly from 1100 F aluminum minimizes the potential radiation hazard. The $^{27}Al(n,\gamma)^{28}Al$ reaction during irradiation gives ^{28}Al with a 2.8 min half-life. After allowing the short lived ^{28}Al to decay away, the sample capsules can be removed from the irradiation container. The 1/2 inch thick neutron shielding, A in Fig. 1, is composition 254 from Reactor Experiments, Inc. This thickness of shielding reduces the flux at the motor by a factor of 10^{-10}. The shielding protects the steel alloy Bodine motor which operates at 6 rpm. The motor is connected through a flexible rubber coupling (C) and Nylon shaft (G) to the sample rack (I). The sample rack is a right cylinder which rotates on the same axis as the Nylon shaft. A top view of the sample rack would show 24 slots for the standard[13]) 1720 Pyrex glass sample capsules (J). The sample slots are evenly spaced on a circle near the perimeter of the sample rack. If the period of irradiation is long compared to the period of rotation of the sample rack, each sample in the rack will receive the same neutron dose. The central shaft of the sample rack is threaded at the top. Unscrewing this shaft from the Nylon shaft allows the

sample rack to be removed for sample changing. A slotted lid is shown in Fig. 1 as the uppermost part of the sample rack. This lid is to keep the sample capsules from floating out of the slots when the rack is immersed in the oil bath. The oil used is heavy mineral oil (B.P. 360 °C - 390 °C). This oil is housed in a cylindrical container (K). The axis of the container is the same axis as the Nylon shaft and sample rack. This container is supported on legs (13 inches long) (L) which raise the level of the samples to the center line of the Hohlraum. This puts the samples in the highest flux possible. The container is heated by winding three one inch by eight foot silicone-coated heating tapes around the sides of the cylinder. A fourth heating tape is looped back and forth on the bottom of the oil bath. Temperature control is maintained by operating three of these heating tapes via a rheostat at all times during irradiation. The rheostat would be adjusted so that the three tapes would maintain the temperature of the oil bath at 5 to 10 °C less than the desired temperature. The fourth heating tape (controller tape) would be turned on and off by a temperature controlled to maintain the desired temperature. The proportional temperature controller was located remote from the Hohlraum. The temperature probe used with the temperature controller was an iron-constantan thermocouple place in the oil bath.

Other convenient construction features should be noted. The flexible rubber coupling (C) adjusts for small misalignment between the motor shaft (P) and the Nylon shaft. N is a Teflon collar attached to the Nylon shaft. This collar serves as the bearing on which the sample rack turns. The weight of the sample rack is suspended from this bearing, not the motor. M is just a support leg for the motor and neutron shield.

In addition to the neutron shielding, several safety features were incorporated in the design. (1) When the entire assembly shown in Fig. 1 was irradiated, it was placed in an oil drip pan. If the oil bath leaked, the oil would be caught in the drip pan. (2) A drastic oil leak could be remotely monitored and the irradiation stopped. A second thermocouple (safety thermocouple) was placed between the controller tape and the wall of the oil bath container. If a large leak occured, the oil level in the oil bath would drop below the controller thermocouple. The heat conduction between the wall and the controller thermocouple would be poor. Thus, the controller tape would be turned on all the time. The temperature monitored by the safety thermocouple would increase past a preset safety margin around the desired operating temperature. This would cause a remotely placed bell to ring, alerting the experimenter. (3) When the oil bath was filled with oil at room temperature, the oil level (including the samples and sample peak) was two inches below the top of the container. This margin would allow for expansion of the oil bath during heating.

(4) The oil was preheated in an open container for eight hours at 200 °C before it was used for an irradiation. This would remove any significant low-boiling fraction. Nevertheless, oil vapors would be formed by the heating and irradiation. These vapors were not allowed to escape into the Hohlraum. The lid (O) of the oil bath was vapor sealed to the base (K) by a Teflon O-ring placed in groove H. The lid was held down by twenty 1/4-inch Nylon bolts (and nuts) (Q) which fastened the lid to the lip of the oil bath container. The thermocouple leads were forced through tiny holes in a Teflon plug before they were welded into a thermocouple. This Teflon plug was screwed

into a threaded hole in the lid (E) to make a pressure seal. Vapors could not escape around the Nylon shaft because of two Telfon gaskets (F). Pressure relief at 3 psi above atmospheric was provided by a brass pressure relief valve (B). The pressure relief valve was placed behind the neutron shielding but connected to the interior of the container by a pipe (D). The exhaust side was connected to the reactor facility vacuum exhaust system by 3/8" Nylon tubing. Any vapor which escaped around the lower gasket would presumably be exhausted before it escaped past the upper gasket and into the Hohlraum. The exhaust from the pressure relief valve and from the volume between the gaskets is not shown in Fig. 1.

(5) Also not shown in Fig. 1 is a microswitch which showed if the Nylon shaft was indeed rotating during irradiation. One side of the top of the Nylon shaft that projected into the neutron shielded region was flattened. The arm of the microswitch was placed against the side of the shaft so that as the shaft rotated the switch would be activated by the flattened side. This would occur once each revolution and could be remotely monitored.

(6) The temperature controller, the rheostat, the safety thermocouple alarm circuit, and the rotation sensor were all located external to the Hohlraum. The wires and the Nylon tubing were lead out of the Hohlraum through a beam port. A wooden beam port plug was made with one groove down the entire length for the nylon tubing and another groove for the wires. All wires except the thermocouple wires were fixed with quick disconnects. The wires were fed through a pressure-tight cap at the external end of the beam port. This cap prevented escape of ^{41}Ar, from $^{40}Ar(n,\gamma)^{41}Ar$, formed in the Hohlraum during irradiation.

(7) The temperature monitored by the control thermocouple was also read out on a strip chart recorder. This gave a continuous record of the temperature control and would alert the experimenter to any failure. (8) In addition to ringing an alarm, the safety thermocouple also shut down all current to the irradiation container. (9) The total current to all four heating tapes is displayed on an ammeter.

3. Results

Excellent temperature control (± 0.5 °C) has been achieved at all temperatures in the 25 °C - 200 °C range in tests outside the reactor. Irradiations have been made for 24 hours at the Berkely Campus Nuclear Reactor. Excellent temperature control was obtained at 130 ± 0.5 °C. The irradiation container was removed from the Hohlraum 40 hours after the end of bombardment. The observed gamma radiation was primarily from the heating tapes. The observed radiation two inches from the irradiation container and heating tapes (at the level of the sample capsules) was only 130 mR/hr on the side that was nearest the core and 70 mR/hr on the side that was farthest from the core. The flux on the side of the container at sample level was (in units of 10^8 n cm^{-2} sec^{-1}) 34.5 nearest the core, 10.3 farthest from the core and 3.90 in the sample position. The flux was monitored with cobalt foils. Na(I) counters were used to monitor the gamma radiation from ^{60}Co formed in the $^{59}Co(n,\gamma)^{60}Co$ reaction.

Acknowledgments

The authors express appreciations to Don Elliott and Dick Curtis of the reactor staff and Doug MacDonald of the Lawrence Berkeley Laboratory for help with the design; Larry Ornealas for constructing the container and Fred Vogelsberg for handling the electronics.

References

1) G. R. Freeman, Radiation Res. Rev. 1 (1968) 1

2) R. Wolfgang, Progress in Reaction Kinetics 3 (1965) 97

3) D. Brune, Anal. Chim. Acta 44 (1969) 15

4) G. Glanz, N. Dutescu, and A. Georgescu, Rev. Romaine. Phys. 9 (1964) 137

5) A. C. Klank, T. H. Blewitt, J. J. Minarik, and T. L. Scott, Bull. Inst. Int. Froid. Annexe 5 (1966) 373

6) W. Decker, J. Diehl, K. Hain, H. Katheder, and C. Leitz, Kerntechnik 8 (1966) 257

7) N. Berglund, D. Brune, and B. Schüberg, Nucl. Instr. Methods 75 (1969) 103

8) J. Ahlf and G. A. Melkonian, Atomkernenergie 10 (1965) 459

9) J. H. O'Donnell, Chem. Ind. 15 (1968) 481

10) J. Ahlf, D. Anders, and R. Benefeld, Kerntechnik 8 (1966) 173

11) T. Hayashi and M. Kudoh, J. Nucl. Sci. Technol. 6 (1969) 390

12) A. H. Rosenberg and R. Wolfgang, J. Chem. Phys. 41 (1964) 2159

13) D. C. Fee and S. S. Markowitz, J. Inorg. Nucl. Chem., In Press

14) A. Hosaka and F. S. Rowland, J. Phys. Chem. 75 (1971) 378

15) R. Kushner and F. S. Rowland, J. Phys. Chem. 76 (1972) 190

Figure Captions

Fig. 1. Irradiation Container - The lid has been raised for purposes of illustration. Legend: A, neutron shield; B, brass pressure relief valve; C, flexible rubber coupling; D, pipe to pressure relief valve; E, hole for thermocouple lead plug; F, Teflon gaskets; G, Nylon shaft; H, O-ring groove; I, sample rack; J, sample capsule; K, oil bath container; L, 13" support leg; M, motor support leg; N, Nylon collar; O, lid; P, motor shaft; Q, Nylon bolt and nut.

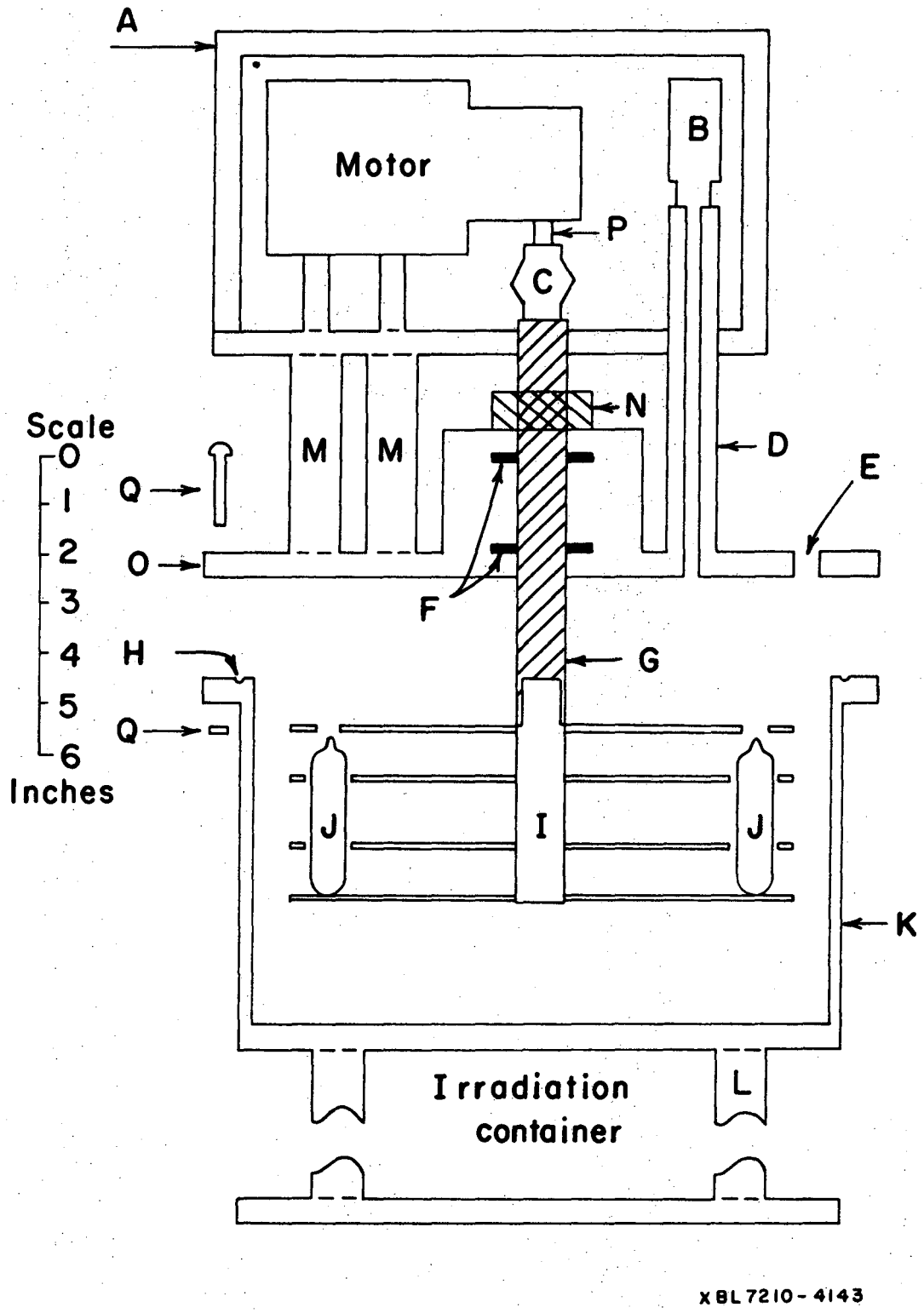
A
Motor
B
P
C
N
Scale
0
1
2
3
4
5
6
Inches
Q
O
M
M
D
E
F
H
G
Q
J
I
J
K
Irradiation
container
L
XBL7210-4143

Fig. 1

LEGAL NOTICE

This report was prepared as an account of work sponsored by the United States Government. Neither the United States nor the United States Atomic Energy Commission, nor any of their employees, nor any of their contractors, subcontractors, or their employees, makes any warranty, express or implied, or assumes any legal liability or responsibility for the accuracy, completeness or usefulness of any information, apparatus, product or process disclosed, or represents that its use would not infringe privately owned rights.

TECHNICAL INFORMATION DIVISION
LAWRENCE BERKELEY LABORATORY
UNIVERSITY OF CALIFORNIA
BERKELEY, CALIFORNIA 94720