LBL-12721

CONF-811040--124

Lawrence Berkeley Laboratory

UNIVERSITY OF CALIFORNIA

Engineering & Technical Services Division

MASTER

Presented at the 9th Symposium on Engineering Problems of Fusion Research, Chicago, IL, October 26-29, 1981

NEUTRAL-BEAM PLASMA SOURCE METAL-ARC PROTECTION CIRCUIT

G.J. deVries, D.B. Hopkins, A.F. Lietzke and H.M. Owren

October 1981

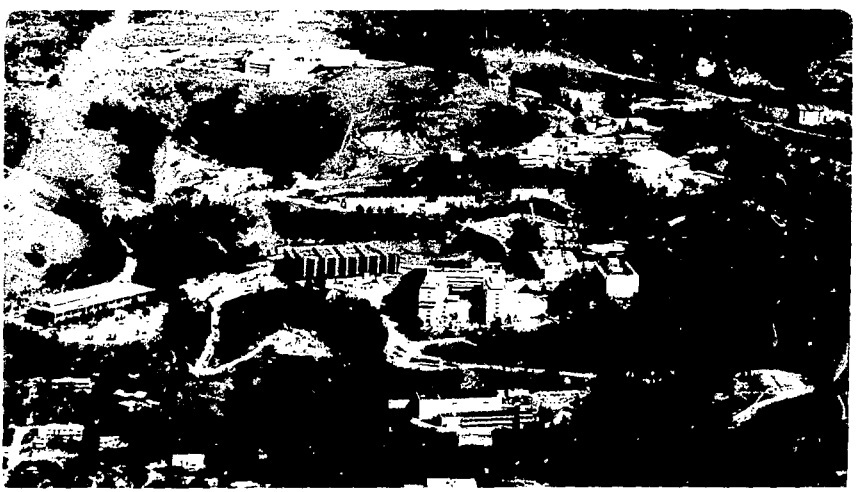

Prepared for the U.S. Department of Energy under Contract W-7405-ENG-48

NEUTRAL-BEAM PLASMA SOURCE METAL-ARC PROTECTION CIRCUIT*

G.J. deVries, D.B. Hopkins, A.F. Lietzke and H.M. Owren
Lawrence Berkeley Laboratory
University of California
Berkeley, CA 94720

DISCLAIMER

SUMMARY

Neutral beam sources occasionally suffer from metal arcs inside the plasma chamber. This arcing can cause serious damage when it is sustained. Experience has shown that arcing for less than 10 msec is tolerable. This paper describes an electronic circuit designed to detect such an arc (or "cathode spot") and generate a signal which can be used to turn off the source arc current and the accel voltage.

One principle of spot recognition is based on the detection of abnormal, fast fluctuations in a Langmuir probe signal.

A second detection principle looks for an abnormally low plasma source efficiency by comparing the probe's saturated ion current to the arc current. Both of these principles are exploited in the circuit described in this paper.

METAL ARCS IN PLASMAS

Metal-arcs in plasma sources are frequently observed when the plasma source is operating under the conditions where electron density $\approx 6 \times 10^{11}/cm^3$, Debye length ≈ 20 μm, and average positive ion current density ≈ 200 mA/cm^2. The phenomenon represents a "punch-thru" of the voltage sheath which separates the plasma from all relatively-negative electrodes. It is frequently labeled by such names as "cathode-spot" and "unipolar-arc", depending on whether the electrode is "hard-wired" to the arc power supply negative terminal or floating, i.e., with zero net current. It is believed to be the vacuum analog of the common arc welder. The sheath's potential difference is generally a substantial fraction of the arc voltage ($V_{anode} - V_{cathode}$) and may be viewed as a measure of the relative difficulty which the plasma encounters in obtaining electron emission from the electrode surface. This interface can be ruptured with the formation of one or more tiny, high density metal-plasma plumes. These are believed to be maintained by very local, very intense electron emission through a dense metal-vapor cloud (resulting from intense cathode sublimation).

This electron emission reduces the sheath impedance. Hence, the spot causes the arc voltage to drop and/or the arc current to increase (Figure 1); the average ion output current then becomes reduced and noisy. For a unipolar-arc, the electron cooling effect of the spot is believed to be responsible for the slight increase in observed arc impedance; most noticeable is the noisy probe signal. Negative-electrode material coats surrounding surfaces in both cases. Variations of this general description have been observed.

Sustained operation of metal arcs have produced at least six bad effects:

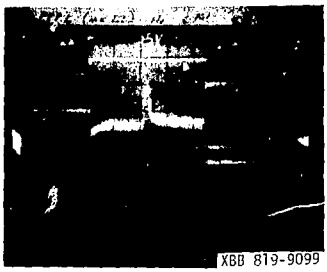

Figure 1 A metal arc usually causes the arc voltage to lower (top trace) and the arc current to increase (center trace) due to a lower arc impedance.

1. Melt-thru of the anode wall;
2. Insulator sublimation, carbonization, or puncture;
3. Little balls or flakes of cathode material, transferred to the accelerator grids, interfere with voltage-holding and beam production;
4. Filament destruction by pitting or melt-thru;
5. Retrograde ($-J\times\bar{B}$) motion in a magnetic field can move a "spot" from a relatively innocuous location to one where a, b, c, or d occur;
6. Unipolar-arcs, usually relatively innocuous due to their small current, can trigger the formation of high-current cathode spots.

For these reasons, when a spot occurs, the arc current is terminated until the sheath's voltage-holding capability is restored.

DETECTION PRINCIPLE

The operation of a neutral beam plasma source includes power supply, plasma source and accelerating protection circuitry as standard equipment.[1] During the years of neutral beam operation in Berkeley, various methods of metal arc (spot) detection have been tried and found to be inconvenient because of neutral-beam source characteristic dependence. The detection principle described in this paper is relatively independent of source characteristic variations.

The detection principle is based on the following two techniques:

a. The unipolar-arc usually causes a fast fluctuating Langmuir probe signal. These fast fluctuations (in the range of 1 kHz to 40 kHz) are detected when the amplitude exceeds a preset threshold value of a signal comparator. The output of this comparator is linearly integrated by means of a charge pump and compared to a preset adjustable threshold. If this

*This work was supported by the Director, Office of Energy Research, Office of Fusion Energy, Development and Technology Division of the U.S. Department of Energy under Contract No. W-7405-ENG-48.

threshold is exceeded, a fault signal is generated.

b. The plasma efficiency is measured by comparing the DC component of the probe current with the arc current. The ratio is approximately constant for varying operating conditions of a given source. A fault signal is generated when the ratio I_{probe}/I_{arc} drops below a preset value, thus indicating low-efficiency plasma production or a cathode spot.

SIMPLIFIED CIRCUIT DIAGRAM (FIGURE 2)

Plasma Fluctuation Detector

The probe signal is amplified via a high-pass filter with a corner frequency of 650 Hz. Probe signal fluctuations with frequencies above 650 Hz generate an error signal if they exceed the comparator's amplitude threshold. Each time an error signal is detected, the integrating capacitor is charged a fixed amount. For a repetitive error signal (with a frequency of 3 kHz and above), the capacitor will be charged continuously, thus causing the voltage to rise linearly. This voltage on the capacitor is compared with a preset reference voltage and an arc termination signal is generated if this reference voltage is exceeded.

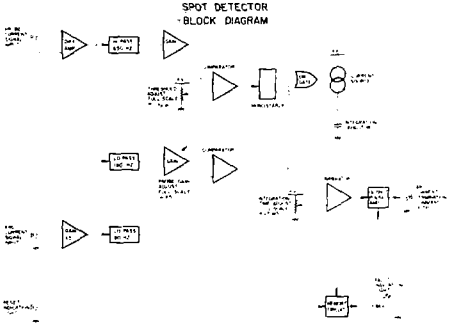

XBL 8110-12233

Figure 2 Simplified Circuit Diagram of the Metal Arc Detector

Arc Efficiency Detector

The DC component of the probe signal is obtained from a low-pass filter with a corner frequency of 180 Hz. This signal is then compared to a signal proportional to the source arc current. The arc current signal is amplified via a low-pass filter with a corner frequency of 90 Hz. This filter delays the rise of the arc current signal, with reference to the probe signal, in order to maintain the I_{probe}/I_{arc} ratio above the preset fault trigger level during the turn-on of the source arc current, thus preventing an unwanted fault signal from being generated. The I_{probe}/I_{arc} ratio is measured with a signal comparator whose output controls the current source feeding the integration capacitor. A fault signal is generated by means of the same type of comparator described above for the repetitive fluctuating probe signal detection circuit.

OPERATIONAL CONTROLS OF THE DETECTOR

Operation of the detector requires only a few adjustments. These are:

a. "Noise threshold" adjustment (calibration range of 1 volt peak-to-peak, full-scale). This probe-signal noise threshold has been set empirically at 100 - 150 mV on the neutral-beam sources in Berkeley (a 100 current viewing resistor is used.)

b. "Persistence" adjustment (calibration range of 25 msec full-scale). This adjustment sets the time duration that a suspicious probe signal may persist before a command is generated to terminate the arc current. For clean-source operation, a few milliseconds usually suffices.

c. "Arc efficiency threshold" (calibration range of probe signal gain is x5 full-scale). This adjustment controls the gain of the DC component of the probe signal for comparison with the I_{arc} signal. The gain should be adjusted for the particular arc current shunt in use and the plasma source efficiency. Figure 3 indicates the exact trip level. An operational margin of 30 - 50% is usually added.

d. "Test". A circuit allows the user to quickly check the unit for proper performance. This is accomplished by means of a local oscillator (frequency is 6 kHz) with a variable amplitude. By activating the test circuit with a front panel push button, one injects a simulated "noisy probe" signal. By varying the amplitude, the noise-threshold trip level can be checked. The I_{probe}/I_{arc} ratio is checked by injecting a test signal (frequency approximately 30 Hz) into both input circuits.

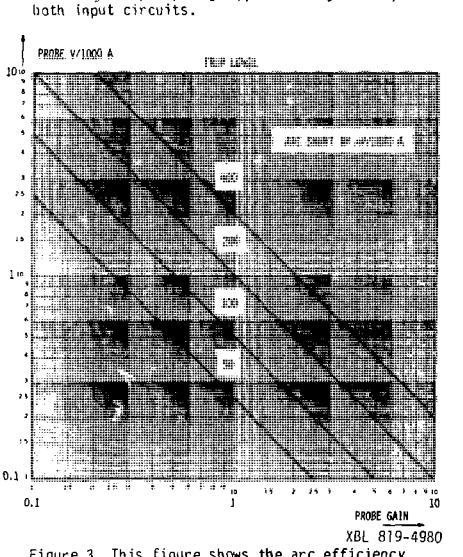

XBL 819-4980

Figure 3 This figure shows the arc efficiency detector trip threshold for various arc current shunt values. The probe signal amplitude for 1000 Amps arc current is graphed versus the probe gain.

SCHEMATIC AND CIRCUIT DESIGN NOTES

A detailed circuit diagram is given in Figure 4. A few functions are described below.

The Charge Rate Control

The charge rate is controlled by means of a retriggerable monostable which switches the current-source that charges the integrating capacitor. The capacitor discharges (time-constant is 0.5 sec) to an adjustable negative offset voltage in order to bias the comparator slightly negative, thus preventing spurious fault signals from being generated when no input signal is present.

The Frequency Filters

Two pole Bessel filters[2] are used. They do not suffer from overshoot in response to a step voltage on the input. The necessary delay difference mentioned earlier between the I_{probe} and I_{arc} is accomplished by a difference in the corner frequencies of the filters. An active diode circuit in the arc signal filter removes the filter delay during arc turn-off time, thus preventing an unwanted fault signal from being generated. Figure 5 shows a photograph of the filtered signals of I_{probe} and I_{arc} when square-wave input signals are employed.

XBB 819-9097

Figure 5 The square wave response of the two frequency filters are shown above. The top trace is the low-pass probe filter response; the bottom trace is the arc current filter response. Time scale is 1 msec/division. (F.S. = 10 ms)

Operational Amplifier

The operational amplifiers have been selected according to the gain bandwidth performance (20 MHz for the HA2525 and 100 MHz for the HA2625) needed for the amplifiers of the AC component of the probe signal. These op amps also offer a relatively small offset voltage (<5 mV) so that no external adjustments are required to obtain high threshold accuracy.

Indicator Light

A light-emitting diode has been added, for fault analysis purposes. It remains lit after a "termination command" has been generated. A reset pulse, for resetting the light-controlling flip-flop, is obtained from the next beam "turn-on" pulse.

CIRCUIT PACKAGE AND PERFORMANCE

Circuit Package

The detector circuit has been built on a printed circuit layout, one side of which is used as a ground plane. The circuit is housed in a NIM module.

Performance Results

The detector has been in service steadily this year on different plasma sources. In general, the unit has performed satisfactorily (Figure 6) provided that the operational adjustments have been set according to the specific source in use.

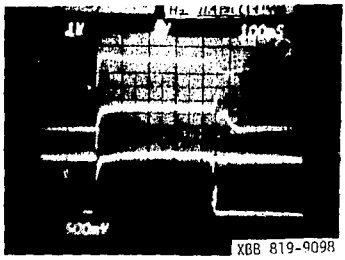

XBB 819-9098

Figure 6 The photograph shows an increase in arc current (center trace) and a decrease in probe current (lower trace), indicating a spot and causing the arc efficiency detector to terminate the arc. The top trace shows the arc voltage.

Possible Improvement

Some consideration has been given to an automatic adjustment of the noise threshold in the fast fluctuating (AC) probe signal detection circuit. The idea is based on the fact that the ratio of the AC component of the probe signal to the low frequency component of the probe signal should be nearly independent of plasma source operating levels. To achieve this feature in practice, the DC component of the probe signal could function as the reference voltage for the noise threshold comparator. This function has not yet been implemented.

ACKNOWLEDGEMENTS

The authors wish to thank the many people involved in manufacturing the unit, and in particular, Horace Warnock for the printed circuit layout work, Joe Perez for the preparation of the figures and Carolyn Wong for the typing and layout of this paper.

REFERENCES

1. D.B. Hopkins, et al., "Protection and Fault Detection for Lawrence Berkeley Laboratory Neutral Beam Sources", Proceedings of the 8th Symposium on Engineering Problems of Fusion Research, IEEE Pub. No. 79CH1441-5 NPS, pg. 2019, Nov., 1979.

2. Anatol I. Zverev, Handbook of Filter Synthesis, John Wiley and Sons, Inc., pg. 407, 1967.

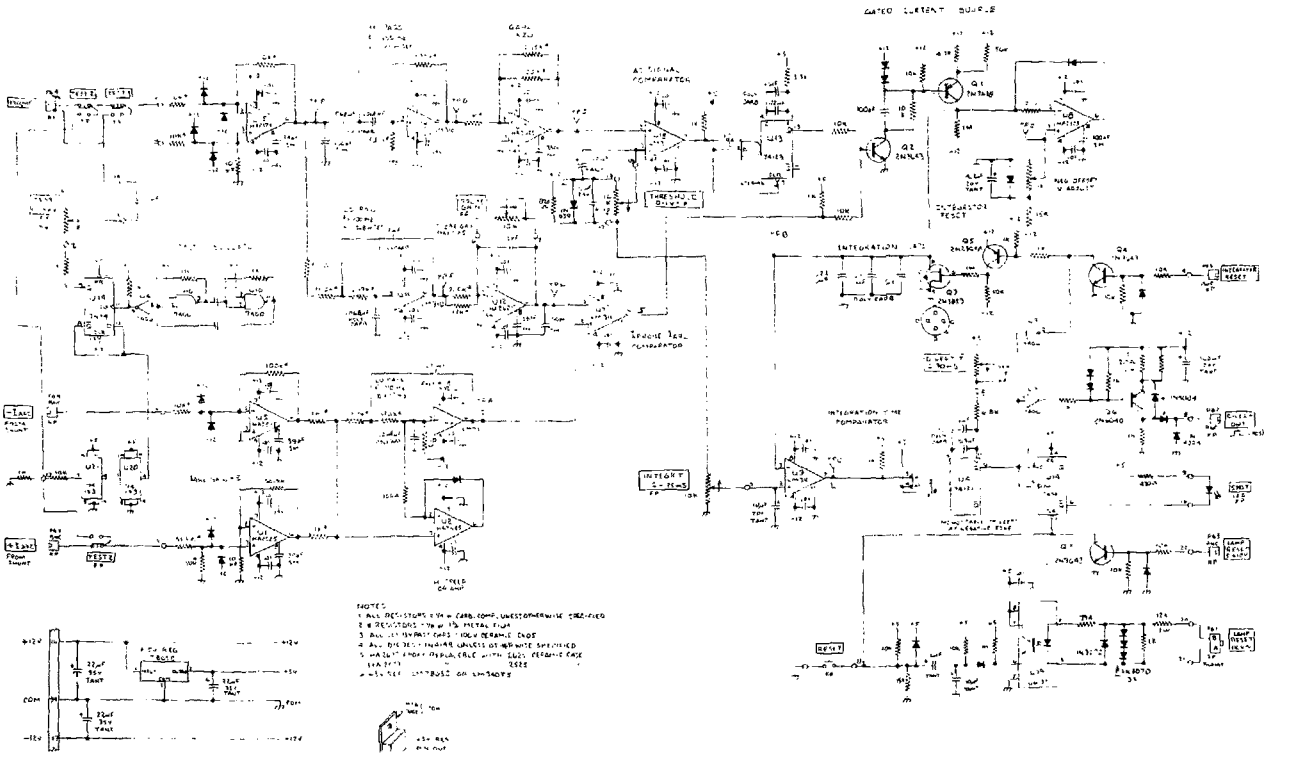

XBL 8110-12232

Figure 4 Detailed Circuit Diagram of the Spot Detector