LBL-12777
UC-95d

Lawrence Berkeley Laboratory
UNIVERSITY OF CALIFORNIA

ENERGY & ENVIRONMENT DIVISION

MIDWAY HOUSE-TIGHTENING PROJECT:
A STUDY OF INDOOR AIR QUALITY

Francis J. Offermann, John R. Girman,
and Craig D. Hollowell

May 1981

TWO-WEEK LOAN COPY

This is a Library Circulating Copy which may be borrowed for two weeks. For a personal retention copy, call Tech. Info. Division, Ext. 6782

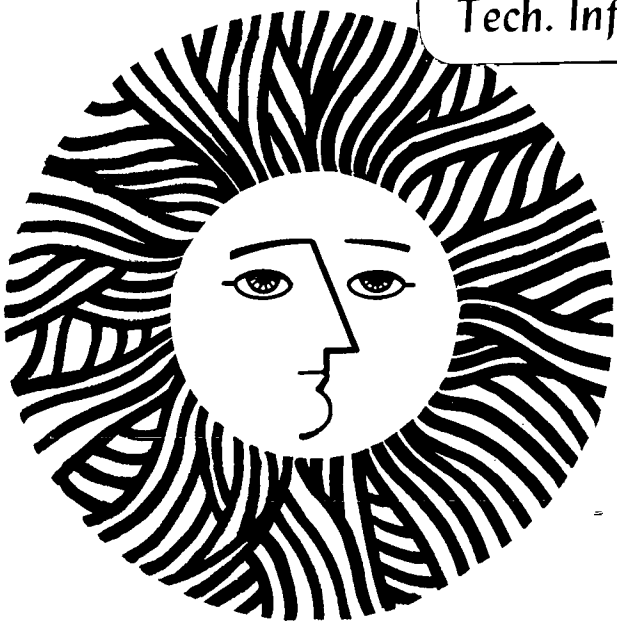

LBL-12777 c.2

Prepared for the U.S. Department of Energy under Contract W-7405-ENG-48

DISCLAIMER

This document was prepared as an account of work sponsored by the United States Government. While this document is believed to contain correct information, neither the United States Government nor any agency thereof, nor the Regents of the University of California, nor any of their employees, makes any warranty, express or implied, or assumes any legal responsibility for the accuracy, completeness, or usefulness of any information, apparatus, product, or process disclosed, or represents that its use would not infringe privately owned rights. Reference herein to any specific commercial product, process, or service by its trade name, trademark, manufacturer, or otherwise, does not necessarily constitute or imply its endorsement, recommendation, or favoring by the United States Government or any agency thereof, or the Regents of the University of California. The views and opinions of authors expressed herein do not necessarily state or reflect those of the United States Government or any agency thereof or the Regents of the University of California.

LBL-12777
EEB-Vent 81-15

MIDWAY HOUSE-TIGHTENING PROJECT: A STUDY OF INDOOR AIR QUALITY

Francis J. Offermann, John R. Girman, and Craig D. Hollowell

Building Ventilation and Indoor Air Quality Program
Energy and Environment Division
Lawrence Berkeley Laboratory
University of California
Berkeley, CA 94720

May 1981

This work was supported by the Assistant Secretary for Conservation and Renewable Energy, Office of Buildings and Community Systems, Buildings Division of the U.S. Department of Energy under Contract No. W-7405-ENG-48, and the Bonneville Power Administration, Portland, Oregon.

ABSTRACT

To meet the increasing demand for energy, some utility companies are realizing that sponsoring residential conservation programs is an attractive economic alternative to building new power plants. Concern has arisen, however, that some conservation measures reduce the natural ventilation of the house and thus can degrade indoor air quality. To address this concern, the Bonneville Power Administration (BPA) and the Lawrence Berkeley Laboratory (LBL) conducted a cost-shared joint study of indoor air quality in twelve retrofitted houses of the BPA Midway Substation Residential Community (MSRC). Measurements of effective leakage areas and average concentrations of nitrogen dioxide, formaldehyde, and radon, were made before and after special house-tightening retrofits by LBL and BPA "house doctors." The average reduction in leakage area resulting from these retrofits was 32%. None of the pollutants measured before or after the retrofits, reached levels exceeding existing guidelines. The moderate increases in radon and formaldehyde concentrations observed are consistent with what would be expected from the estimated average decrease in air-exchange rates. Because the pre- and post-retrofit measurements involved only single, relatively short-term samples taken two months apart, uncertainties associated with the variability of source strength and occupant activities affecting ventilation remain and preclude any definitive conclusions that the increases observed are purely the result of the retrofits. A more conclusive study would require measurements of a larger sample of homes for a longer period of time, including simultaneous monitoring of control (un-retrofitted) houses.

keywords: energy conservation, formaldehyde, house doctor, house-tightening retrofits, indoor air quality, infiltration, leakage area, nitrogen dioxide, radon, residential buildings

INTRODUCTION

To meet the increasing demand for energy, many utility companies are now realizing that it is more cost effective for them to subsidize energy-conservation programs than to construct new power plants. With 12% of the total resource energy consumed in the United States being used for residential space heating or cooling,[1] some utility companies are sponsoring residential weatherization programs. Some conservation measures, such as insulation, improve the thermal integrity of the structure while others, such as weatherstripping and caulking, reduce the quantity of air that leaks into and out of the building. In a typical house, a significant amount of the energy consumed for space heating and cooling is due to air leakage -- estimated to be one-quarter to one-half of the total space conditioning load.

One of the problems associated with houses where air leakage has been reduced is that the concentrations of indoor-generated air pollutants tend to be higher than those in well ventilated houses. Indoor contaminants include combustion products (gaseous and particulate chemicals from cooking, heating, and tobacco smoking), odors and viable micro-organisms from occupants, a broad spectrum of chemicals outgassed by building materials and furnishings, and toxic chemicals from cleaning products and other materials used by occupants. Table 1 lists some indoor contaminants identified as potential health hazards, and their sources. The concentration of indoor-generated pollutants in a house depends on both the source strength (emission rate) of the pollutant and the rate of pollutant removal. One of the primary removal mechanisms can be the dilution and flushing of indoor-generated pollutants with outside air. The simplest case is that of a non-reactive pollutant with a constant indoor source strength, in which any reduction in the air-exchange rate would lead to a corresponding increase in the concentration of the pollutant (assuming outdoor pollutant concentration to be insignificant). The effects of any conservation retrofit on indoor air quality can be estimated to a first approximation if the air-exchange rate is known before and after the retrofit.

In September 1979, the Bonneville Power Administration (BPA) arranged for specialists from the Lawrence Berkeley Laboratory (LBL) to measure the effective leakage area (a measure of house tightness) in the 18 houses BPA had instrumented to study energy conservation practices.

The houses selected for the study were part of the BPA Midway Substation Residential Community (MSRC). These homes were built to house the employees of the remotely located BPA power substation, which is located some 40 miles northwest of Richland, WA. The objective of the study was to assess the impact of various retrofit strategies such as installation of storm doors, storm windows, and insulation on home infiltration rates and energy consumption.

In December 1979, BPA had 13 of the 18 houses retrofitted with insulation, storm windows, and storm doors, with the remaining five serving as a control group. In May 1980, LBL remeasured the effective leakage area in all 18 houses. The results of these pressurization tests[2] indicated that there was no significant change in the leakage areas of the houses receiving either no retrofits or insulation only, and an average reduction in leakage area of 17% in the houses fitted with insulation and storm doors and windows.

During these tests it became clear, however, that a substantial number of air leaks remained, even after 1979 retrofit work, and that most of these could be sealed with minimal cost and effort. BPA and LBL thereupon conceived the idea of a cost-shared joint study: The Midway House Tightening Project. Work on this study began in October 1980.

Twelve of the MSRC homes were selected for further tightening by LBL led teams of BPA and LBL "house doctors." Because of concern about the effect reduced ventilation might have on the indoor air quality of these houses, a parallel study was initiated to measure selected parameters of indoor air quality before and after the house tightening. In this paper we will discuss the protocol used for this study, but will focus on the the impact of the house-tightening retrofit on the indoor air quality of the twelve houses.

EXPERIMENTAL PROTOCOL

To assess the impact of the house-tightening retrofits on indoor air quality, we measured the "effective leakage area" and the concentrations of selected indoor air pollutants before and after retrofitting in each of the twelve houses. The concept of effective leakage area has been used by others at LBL to develop a predictive model of infiltration.[3] In this model, the effective leakage area is the appropriate scale parameter for infiltration, i.e., reducing the leakage area by half reduces the infiltration rate by half. In this report, infiltration refers to that portion of a house's air exchange rate that is attributable to the natural leakage of air through cracks in the building envelope. (The total air exchange rate in a house is a combination of infiltration and the ventilation that is under occupant control, such as opening windows, etc.) Weatherization measures, such as caulking and weatherstripping, reduce the infiltration rate by reducing the leakage area of the house.

The leakage measurements obtained in this study served two purposes: the first was to assess the effectiveness of the retrofit in reducing air leakage; the second was to assist our comparative evaluation of indoor air quality before and after retrofitting, i.e., enabling estimates of the air exchange rate to be made.

Based on findings from our ongoing studies of indoor air quality, we chose to measure three major contaminants of indoor air -- radon 222 (Rn), formaldehyde (HCHO), and nitrogen dioxide (NO_2) -- all of which can be monitored reliably with minimum inconvenience to house occupants.

Radon, a product of the natural decay of radium, is a chemically inert, radioactive gas. Any substance containing radium is a potential source of radon gas. Since radium is a trace element in most rock and soil, sources of indoor radon can include the soil under building foundations, building materials such as concrete or brick, and tap water from underground wells. Radon emanation rates from soil and rock can vary significantly. Radon decays with a half life of 3.8 days, producing a chain of four short-lived daughters, which constitute the primary health hazard to humans. These daughters can attach themselves to airborne particulates which, if inhaled, can be retained in the

tracheobronchial or pulmonary regions where subsequent decay can irradiate the surrounding tissues. The principal health hazard associated with exposure to alpha radiation from radon daughters is increased risk of lung cancer.[4]

Formaldehyde is present in the indoor environment as a component of building and furniture materials, primarily as urea formaldehyde resin in particleboard. Formaldehyde from these resins is slowly released into the indoor environment, particularly when materials are new. Formaldehyde is currently being scrutinized as an allergenic and possibly carcinogenic substance.[5,6] Exposure to low concentrations of formaldehyde can cause a dry or sore throat, eye irritation, and swollen mucous membranes and, at very high levels, it can cause pulmonary edema. Individual response to formaldehyde varies widely and some individuals become increasingly sensitive to it as a result of continued exposure.

Nitrogen dioxide is produced as a by-product of combustion occurring in natural gas appliances, such as stoves, furnaces, clothes dryers, and water heaters; and it is also a by-product of tobacco smoking. Exposure to nitrogen dioxide primarily affects the respiratory system. At low concentrations, it increases the susceptibility to respiratory disease; at high concentrations, it can cause pulmonary edema and even death.[7] Animal studies have shown that long-term exposure to nitrogen dioxide alters the function of circulatory and respiratory systems.[7]

Although carbon monoxide and particulates are also hazardous pollutants of the indoor environment, neither was measured in this study because inexpensive instrumentation suitable for long-term sampling in occupied houses is not presently available.

In addition to the three pollutants described, we also monitored relative humidity (RH) because of its effect on occupant comfort, and its association with mold, mildew, and condensation which can cause damage to building materials.

The sampling site for each of the indoor air quality measurements made in the MSRC houses was the living room, which was the central activity area in each house. The pre-retrofit measurements were made in November, 1980 and the post-retrofit measurements were made in January, 1981. The following are short descriptions of the measurement techniques used.

Leakage Area Measurement Technique

The "effective leakage area" of each home was measured by the fan pressurization technique[8] before and after house tightening. This technique involves temporarily installing a "blower door" into the doorway of the house (see Figure 1). The blower door, equipped with an axial fan, is adjustable so that it can be fitted tightly into a variety of door frames. A direct-current controller regulates the fan speed and displays the rotational speed of the fan, which is adjusted to produce specific interior/exterior differential pressures. The differential pressure is measured with an inclined manometer, and the flow rate of air through the fan is calculated using an experimentally determined fan calibration that correlates the air flow-rate to the fan speed at known differential pressures. This procedure is repeated for several positive and negative pressures to produce the data necessary to characterize the flow of air through the envelope of the house. The effective leakage area is then determined by extrapolating the pressurization data to the regime of the differential pressures that drive infiltration.

To determine infiltration by the newly developed LBL model,[3] the effective leakage area, the average indoor/outdoor temperature difference and the average wind speed must be known. Average daily windspeed and outside temperature measurements, compiled from instantaneous measurements taken every 15 minutes at the BPA Midway weather station, were combined with measurements of effective leakage area and average indoor temperature to calculate infiltration rates for each house. These calculations yield the infiltration portion of the air-exchange rate; the opening of doors and windows and use of fireplaces, which are under occupant control, must be estimated and added to the infiltration rate derived above. A current working estimate used at LBL to account for the

added ventilation occasioned by occupant behavior, is 0.10 to 0.15 air changes per hour.

Radon Measurement Technique

For radon measurements, a portable, battery-operated device, the Passive Environmental Radon Monitor (PERM)[9] was used. As depicted in Figure 2, radon atoms diffuse through the desiccant and filter into the metal funnel. Positively charged radon daughters formed by the decay of radon are electrostatically collected onto a thermoluminescent dosimeter (TLD) fastened to the negative electrode at the bottom of the funnel. The TLD chip in the PERM is made of lithium fluoride, which is very sensitive to alpha radiation emitted from the collected radon daughters. After a suitable period of exposure, usually one or two weeks, the TLD chip is removed and the recorded alpha activity is read in a TLD analyzer. The cumulative alpha activity recorded from the TLD chip is directly proportional to the time-weighted average concentrations of radon. Because TLD chips are also sensitive to background gamma radiation, a reference chip kept in a small plastic vial is placed in close proximity to the detection chip. Since both chips are exposed to the same amount of gamma radiation, the measurement can be corrected for background exposure by subtracting the reading of the reference chip from the reading of the detection chip. From our laboratory testing, we have estimated that the relative standard deviation of a measurement made at an exposure of 5 pCi/L for one week is ± 25%.

Formaldehyde Measurement Technique

A special sampling system developed at LBL, and depicted in Figure 3, was used for formaldehyde measurements. The system consists of a pump box, sampling lines, and a sampler. The pump box contains a timer, two vacuum pumps, and a vacuum regulator. The sampler is a small, portable refrigerator with four sampling trains built inside, two for sampling outside air and two for sampling indoor air. Each train consists of two water-filled bubblers backed by a flow orifice for controlling the sampling rate. A line is run from the back of the sampler to a site suitable for sampling outside air, and another line is run from the back of the sampler to a site suitable for sampling inside air. Each bubbler is

filled with 10 mL of distilled water. An unexposed sample of distilled water, analyzed later with the exposed samples, serves as a blank. The timer in the pump box is set to operate the vacuum pumps for a selected sampling period ranging from 12 to 24 hours. The vacuum regulator and flow orifice insure a constant flow rate in each sample train of 2 cubic feet per hour ± 5%, and the refrigerator maintains the proper temperature for optimum collection efficiency. Samples are collected daily and stored inside the refrigerator. At the end of each sampling period (approximately one week), the accumulated samples are packed with ice in an insulated container and shipped via air express to LBL for analysis. (Formaldehyde samples degrade significantly at room temperatures and must be kept chilled at all times.) The formaldehyde collected in the samples is analyzed with an improved pararosaniline technique developed at LBL.[10] Knowing the concentration of the samples, the volume of air sampled, and the collection efficiency, one can calculate the time-weighted average concentration of formaldehyde. Our laboratory evaluation of this technique indicates that the relative standard deviation of a measurement made at an exposure of 50 ppb for 12 hours is ± 15%.

Nitrogen Dioxide Measurement Technique

Small passive samplers were used for nitrogen dioxide measurements.[11] As illustrated in Figure 4, the NO_2 passive sampler consists of a small acrylic plastic tube. A set of stainless-steel screens coated with triethanolamine, a substance which absorbs NO_2, is placed in the closed end of the sampling tube. The other end is fitted with a removable cap. In the field, samplers are assembled into packs of three and hung at a central indoor location and at an outside location. One pack of samplers is left capped as a zero reference for later analysis with the exposed packs, and the others are uncapped for a period of one week. The NO_2 molecules from the surrounding air diffuse through the sampling tube and are absorbed onto the screens. When the sampling period is completed, the samplers are removed, capped, and mailed back to LBL for analysis. In the laboratory, the amount of NO_2 absorbed by each sampler is developed with a Saltzman reagent and determined colorimetrically. Knowing the amount of nitrogen dioxide collected in the samplers, the diffusion rate through the sampling tube, and the elapsed exposure time,

one can calculate the time-weighted average concentration of NO_2. In this case, we estimate the relative standard deviation of a measurement made at an exposure of 15 ppb for one week to be ± 10%.

Humidity Measurement Technique

For humidity measurements, a fan-powered psychrometer was used. Wet- and dry-bulb temperatures were recorded daily in five or more locations in each house. The relative standard deviation for a measurement made at a relative humidity of 50% is estimated to be ± 5%.

DESCRIPTION OF HOUSES AND RETROFITS

The twelve homes in the Midway House-Tightening Project are all single-family, one-story dwellings. Specific characteristics of the houses that relate to their sources of indoor air pollution are listed in Table 2. To insure the privacy of the cooperating homeowners, houses are referred to by code number only. All of the homes were equipped with electric baseboard heating systems except house #12, which had a solar/electric forced air heating system. No gas appliances were reported in any of the homes. House #12 was vacant during the entire study period. In between the pre- and post-retrofit measurement periods, the occupants of house #7 moved out and the occupants of house #11 moved, with all their furnishings, into house #7, thereby leaving house #11 vacant.

In November of 1980, "house doctors" from LBL arrived in Midway to retrofit the selected homes and train BPA personnel in their special house-tightening techniques.[12] Six of the twelve homes, #4, 5, 7, 9, 10, and 11, were selected for one-day house tightening retrofits, and the remaining six homes, #1, 2, 3, 6, 8, and 12, were selected for two-day retrofits. The house-tightening procedures involved locating leaks by pressurizing the home with a blower door and checking probable leak sites with smokesticks and an infrared scanner. When leaks were located, they were sealed by caulking or weatherstripping and again checked with the smokestick. All electrical outlets and switchplates were gasketed; areas around electric baseboard heaters, air

conditioners, and circuit breakers were caulked; and attic and basement doors were weatherstripped. The only difference between the work done on the one-day and two-day retrofits was the amount of time invested. The one-day retrofits averaged 12 person-hours of effort and the two-day retrofits averaged 22 person-hours.

RESULTS AND DISCUSSION

We have compiled in Table 3, a listing of outdoor standards for nitrogen dioxide (U.S.), recommended indoor standards for formaldehyde (U.S. and Europe), and region-specific guidelines for radon (Florida, U.S.) in order to provide some framework for evaluating the results of this study. Ideally, our measurements should be evaluated against established indoor air quality standards. In the United States, however, the only non-occupational indoor air quality standard that exists is for ozone, and this standard applies only to devices that produce ozone as a by-product, e.g., electronic air cleaners. With the increasing concern about the effect of energy-conserving retrofits on indoor air quality, there is a need for development of appropriate standards for indoor-generated pollutants. A summary of the results of the study are presented in Table 4.

Leakage Area Measurements

Based on the results of the pressurization tests conducted, all of the house-tightening retrofits were successful in reducing leakage area. The largest reduction (51%) of leakage area occurred in house #12 and the smallest reduction of leakage area (9%) occurred in house #9. On an average, the reduction of leakage area for one-day retrofits was 27% and for two-day retrofits, was 37%. The average reduction of leakage area for both one- and two-day retrofits was 32%. Using this figure, we can assume that the average reduction in infiltration rates was also 32%, although, as discussed in the section on Experimental Protocol, because of the ventilation resulting from occupant activities, the percent reduction in actual air-exchange rates will be somewhat less than the percent reduction in leakage area. Based on the weather data collected, average infiltration rates in the MSRC houses were calculated to be

about 0.25 air changes per hour (ach) for the pre-retrofit measurement period, and 0.17 ach for the post-retrofit measurement period. Since the weather during both of these periods was very similar, the reduction is primarily a result of the 32% reduction in leakage area. If 0.10 ach is added to these calculations to account for occupant effects, the average reduction in air exchange rate is 23%.

As an extreme example of occupant activity affecting the house air-exchange rate, the occupants of house #2 invariably had a window or windows open. Despite persistent attempts to encourage the occupants to keep windows closed during the air-sampling period, they kept them open even when outside temperatures were quite cold. This type of activity makes it difficult to estimate the actual house air-exchange rate with any reasonable certainty.

A more complete discussion of the leakage measurements and calculated air-exchange rates in these houses is presented in the report by Krinkel et al.[12]

Radon Measurements

The radon concentrations reported in Table 4 are all two-week time-averaged indoor concentrations. The concentrations are expressed in picocuries per liter, (pCi/L), a measure of radioactivity per liter of air. One curie is equivalent to 3.7×10^{10} disintegrations per second; thus a pCi is equivalent to 2.2 disintegrations per minute. The pre-retrofit measurement for house #7 and post-retrofit measurement for house #11 were lost because of damage to the TLD chips incurred during their shipment from the field to LBL for analysis.

The guidelines for radon, listed in Table 3, are expressed in working levels (WL), a measure of potential alpha energy concentration specifically devised to indicate relative health hazards.[4] The concentration of radon equivalent to the 0.02 WL guideline depends on the radioactive equilibrium existing between radon and its daughters. Given typical indoor equilibrium factors of 0.3 to 0.7,[13] the 0.02 WL guideline corresponds to radon concentrations in the range of 3 to 6 pCi/L. None of the concentrations of radon measured in this study, pre- or

post-retrofit, were in excess of this range. However, several measurements were at the lower limit of the radon guideline. As a group, these levels are comparable to the concentrations found in many of the houses in the United States studied by LBL and by other research organizations.[14]

Because of the uncertainties associated with individual PERM measurements, it was decided that a more statistically significant assessment of the impact of retrofits on indoor concentrations of radon could be made by pooling the data and determining the average difference between the pre- and post-retrofit measurements. Omitting the data from houses #7 and #11, which were incomplete, the average increase in radon concentrations from pre- to post-retrofit periods was 0.5 ± 0.5 pCi/L (at the 90% confidence level), which represents an increase of 42% over the average pre-retrofit concentration of 1.2 pCi/L. The fact that the post-retrofit measurements were higher than the pre-retrofit measurements is consistent with what we would expect to result from the reduced air-exchange rates. Assuming a constant radon source strength, we would expect the magnitude of the increase in radon concentrations resulting from the estimated 23% average reduction in the air exchange rate to be in the range of 20-30%. The 42% measured increase is close to that which we would expect, considering the uncertainties involved in both the radon measurements and the air-exchange rate estimates. Furthermore, since not enough is known about the variability of radon emanation rates and the effects of such factors as changes in barometric pressure and water table level on radon emanation, it is not certain whether two weeks of data is sufficient to yield a representative average, especially considering the two month interval between measurement periods.

It is also possible that house-tightening retrofits can alter the radon source strengths of a house. Sealing the perimeter of a crawl space, for example, may cause increased accumulation of radon within that space which may in turn result in an increased transfer of radon into the living spaces. Similarly, the sealing of any cracks that serve as passageways of radon into the house may reduce the source strength.

One interesting observation was made in house #12, where the forced-air ventilation system was operating incorrectly: The system, normally set up to recirculate house air during the winter months, was exhausting air from the house during the first PERM measurement period, thereby causing elevated air-exchange rates. The radon concentration measured during this period was <1 pCi/L, and a subsequent pre-retrofit measurement, with the house ventilated through natural means only, was 3 pCi/L. This result is qualitatively consistent with the inverse relationship that exists between ventilation and indoor pollutant concentrations.

Formaldehyde Measurements

The HCHO values reported in Table 4 represent averages of the ten samples taken at each location (2 samples per day for 5 days of sampling). Each sample was the result of 12 hours of sampling per day. The indoor concentrations reported are all lower than the value of 100 ppb, which is the most stringent recommended standard; only two values in two houses approached that level. The indoor HCHO concentrations ranged from below the detection limit of 5 ppb to 79 ppb. The outdoor HCHO concentrations were all below the detection limit of 5 ppb.

When the list of furnishings in Table 2 is compared house by house with the indoor HCHO levels, one result becomes apparent: houses #3, 7 (post-retrofit), 9, and 11 (pre-retrofit) all had new furniture made from particleboard, and all had elevated HCHO levels. Moreover, the indoor HCHO concentrations seem to scale with the number and age of the pieces of furniture. The most graphic confirmation we received that new furniture constitutes a primary source of indoor HCHO occurred when the occupants of house #13 with a pre-retrofit HCHO concentration of 79 ± 10 ppb moved with their new furniture into house #7 at about the time it was being retrofit. The indoor HCHO concentration in house #7 jumped from <5 ppb to 69 ± 9 ppb, while the concentration in the then empty house #11 dropped to 13 ± 2 ppb. The new carpets installed in houses #4, 7, and 12 did not appear to cause elevated HCHO concentrations.

Again, it was decided that a more statistically significant assessment of the impact of retrofits on indoor concentrations of formaldehyde could be made by pooling the data and determining the average difference between the pre- and post-retrofit measurements. Omitting the data from houses #7 and 11 because of the source changes associated with the shift in occupancy, the average increase in formaldehyde concentrations was 4 ± 7 ppb (at the 90% confidence level), which represents an increase of 24% over the average pre-retrofit concentration of 17 ppb. This increase is consistent with the increase we would expect from the estimated average decrease in air-exchange rates of 23%; but again, the significance of this consistency is questionable because not enough is known about the variability of formaldehyde outgassing rates. Changes in humidity, in the barometric pressure, and the age of the source material may be important, especially considering the two-month interval between the pre- and post-retrofit measurements. Thus it is not certain whether 5 days data is sufficient to yield a representative average, especially considering the two-month interval between measurement periods.

Nitrogen Dioxide Measurements

The indoor and outdoor NO_2 concentrations reported in Table 4 were all measured by means of NO_2 passive monitors, as described previously in the Experimental Protocol section. This technique yields one-week time-weighted average concentrations. All indoor and outdoor concentrations, both pre- and post-retrofit, were among the lowest we have measured at this laboratory -- less than one tenth the long-term EPA outdoor standard of 50 ppb. The outdoor values are consistent with the concentrations we would expect to find in a rural area distant from industrial and urban NO_2 sources.

The indoor NO_2 concentrations measured were comparable to the outdoor levels. When NO_2 concentrations are elevated indoors, combustion appliances are usually the cause; however, no combustion appliances were reported in any of the houses studied. Tobacco smoking, an NO_2 source of lesser importance, occurred in six of the houses monitored, at levels ranging from 3 to 40 cigarettes per day.

While all NO_2 values were very near the lower detection limit of 1 ppb for one week of sampling, an attempt was made, nevertheless, to determine whether there was a statistically significant difference (at the 90% confidence level) in the indoor NO_2 level of homes with tobacco smokers and those without. No significant difference was found. Similarly, no significant difference was found in the indoor NO_2 levels before and after the retrofits.

Because outdoor NO_2 infiltrates into houses, it can contribute to the NO_2 levels found indoors. In an attempt to correct for this factor, the pre-retrofit ratios of the indoor-to-outdoor NO_2 concentrations were compared to the post-retrofit ratios for each individual house. Again, no significant differences were observed.

Humidity Measurements

The humidity measurements reported in Table 4, represent the average of approximately ten days of data for each test period. Most of the humidity readings were in the 40 to 50% range, neither high nor low by health or comfort guidelines.[15] These average relative humidities are, at best, an approximation, since they were compiled from instantaneous daily measurements. In general, however, humidity levels were high enough that, during cold-weather periods, some of the homeowners experienced problems with condensation on windows. Only one house, # 7, showed a significant increase in average humidity, (21%) after retrofitting. This relatively large change in the humidity level is most likely related to the change in occupancy, between the pre- and post-retrofit measurement periods, since the major indoor sources of humidity are related to occupant activities such as cooking and washing.

CONCLUSIONS

The initial measurements of effective leakage area proved the MSRC houses to be relatively tight structures. After house-tightening retrofits were completed, the leakage areas of these houses were further reduced by 32% on the average. These houses were tight enough that if significant pollutant sources were present, we would expect to find high

indoor pollutant concentrations even during the pre-retrofit measurement period. As reported, none of the pollutants measured, either before or after retrofit, reached levels exceeding the guidelines set forth in Table 3. (It should be understood that the guidelines to which we refer are, at the present time, the only "standards" available to us. There is an urgent need for comprehensive studies of the health risks associated with indoor air pollution so that such guidelines will have applicability to indoor air quality issues.)

When comparing the pre- and post-retrofit air quality measurements, we observed a 42% average increase in radon concentration, a 24% average increase in formaldehyde concentrations, and essentially no change in the concentration of nitrogen dioxide. Assuming that the source strength of formaldehyde and radon remained unchanged for the two measurement periods, these moderate increases are consistent with the increases we would expect as a result of the estimated 23% reduction in air-exchange rates. Since the principal source of indoor nitrogen dioxide was outside air, we would expect the indoor concentrations to be reduced as a result of the retrofits; however, this was not observable because both outdoor and indoor concentrations were near the detection limit of the NO_2 passive samplers.

In spite of these findings, some disclaimers should be made. First, since the pre- and post-retrofit measurements were relatively short sampling periods, taken two months apart, they do not constitute sufficient data to support the conclusion that changes in pollutant concentrations are purely the result of the retrofits. Given the uncertainties associated with pollutant source strengths, measurements, and occupant activities, a more conclusive study would require that a larger group of houses be measured for a longer period of time, and that simultaneous monitoring in control houses (un-retrofitted) be included.

Furthermore, the MSRC sample, while not an unusual group of houses, is not a representative cross-section of U.S. housing stock in that (1) they are all older homes (ten of the twelve houses being thirty years old or older); (2) they contained no combustion appliances, (a major source of indoor air pollution); and (3) they represent a limited

geographic sample (regional differences in radon emanation rates and weather conditions can be significant variables). In addition, a house could be tightened without significant adverse effects on indoor air quality at the time of the retrofit but, with the later introduction of a pollutant source, air quality could be significantly degraded. The movement of new furniture into house # 7 caused a dramatic increase in formaldehyde concentrations and clearly demonstrates the effect of introducing a pollutant source into a house, as well as illustrates the potential of furniture as a formaldehyde source.

Finally, certain pollutants were not measured in this study -- among them, carbon monoxide, particulates, and organic compounds other than formaldehyde. In other indoor air quality studies it has been observed that in houses with tobacco smokers and combustion appliances, the concentrations of carbon monoxide and particulates can reach significantly high levels.

With these qualifications in mind, houses in this class, i.e., older houses without combustion appliances and located in a geographic region not characterized by high radon emanation rates, may be good candidates for house-tightening retrofits. Until a sufficiently large indoor air quality data base is established for the United States, it is strongly recommended that all house-tightening programs include an indoor air quality measurement component to assure that the retrofits designed to reduce infiltration and thereby save energy do not have adverse effects on indoor air quality and human health. A suitable protocol for large-scale indoor air quality audits needs to be developed.

In homes where the retrofit is likely to have adverse effects on indoor air quality, and in homes where the effect of the retrofit is questionable, some contaminant control strategy may be desirable. One promising control strategy we have begun to test at LBL is the use of residential mechanical ventilation systems with heat recovery. Further study is needed to evaluate this strategy as well as other contaminant control measures.

ACKNOWLEDGEMENTS

This work was supported by the Assistant Secretary for Conservation and Renewable Energy, Office of Buildings and Community Systems, Buildings Division of the U.S. Department of Energy under Contract No. W-7405-ENG-48, and by the Bonneville Power Administration, Portland, Oregon.

The authors wish also to acknowledge the cooperation of those staff members of the Bonneville Power Administration who were involved in the study. In particular, we appreciate the support of Richard L. Perlas, Elmer H. Wirtz, and Marvin E. Nelson. Special thanks are also extended to James Lynch, Program Manager of the BPA Midway Energy Conservation Research and Development Program, whose personal supervision of the work performed and whose collaborative efforts in making arrangements with homeowners made possible this study. The homeowners involved in this study also receive our deep appreciation for their cooperation. A host of others also deserve our thanks: Doris Drake of BPA, not only for her efforts in performing the indoor air quality field sampling but also for her careful observations and patience in responding to our requests; the LBL staff, particularly David Grimsrud and Gary Roseme, who developed and organized this project; David Krinkel for compiling the leakage area data; Mary Boegel for analysis of the radon samples; Amey Lee for analysis of the NO_2 samples; and Heidi Schmidt for reduction of the formaldehyde data; our colleagues, James Berk, William Fisk, Robert Miksch, William Nazaroff, Anthony Nero, Arthur Rosenfeld, and Gregory Traynor, who kindly reviewed this report; Laurel Cook who edited the manuscript; Moya Melody for supervising the preparation of the technical illustrations; and Nancy Morrison, Jeana McCreary and Jean Nelson for preparing the final typescript.

REFERENCES

1. U.S. Department of Energy, Energy Information Agency. 1979. Annual Report to Congress, 3. Washington, D.C.

2. Krinkel, D.L., Dickerhoff, D.J., Casey, J., and Grimsrud, D.T. December, 1980. Pressurization Test Results: Bonneville Power Administration Energy Conservation Study. Lawrence Berkeley Laboratory Report, LBL-10996.

3. Sherman, M.H., and Grimsrud, D.T. October, 1980. Measurement of Infiltration Using Fan Pressurization and Weather Data. Lawrence Berkeley Laboratory Report, LBL-10705.

4. Budnitz, R.J., Berk, J.V., Hollowell, C.D., Nazaroff, W.W., Nero, A.V., and Rosenfeld, A.H. 1979. Human Disease from Radon Exposures: The Impact of Energy Conservation in Residential Buildings. Energy and Buildings, 2, 209-215.

5. National Research Council. 1981. Formaldehyde and Other Aldehydes. National Academy Press (National Academy of Sciences), Washington, D.C., Chapter 7.

6. Gunby, Phil. 1980. Fact or Fiction about Formaldehyde? J. Am. Med. Assoc., 243:1697.

7. U.S. Environmental Protection Agency. 1971. Air Quality Criteria for Nitrogen Oxides, E.P.A. Publication No. AP-84, Washington, D.C.

8. Grimsrud, D.T., Sonderegger, R.C., and Sherman, M.H. April, 1981. Infiltration Measurements in Audit and Retrofit Programs. Lawrence Berkeley Laboratory Report, LBL-12221.

9. Boegel, M.L., Nazaroff, W.W., and Ingersoll, J.G. August, 1979. Instructions for Operating LBL Passive Environmental Radon Monitor (PERM). Lawrence Berkeley Laboratory Report, LBL-10246.

10. Miksch, R.R., Anthon, D.W., Fanning, L.Z., Hollowell, C.D., Revzan, K., and Glanville, J. 1981. A Modified Pararosaniline Method for the Determination of Formaldehyde in Air. Submitted to Analytical Chemistry, Lawrence Berkeley Laboratory Report, LBL-9785.

11. Palmes, E.D., Gunnison, A.F., DiMattio J., and Tomczyk, C. Personal Sampler for Nitrogen Dioxide. Am. Ind. Hyg. Assoc. J., 37:570.

12. Krinkel, D.L., Dickinson, J.B., O'Regan, B., and Grimsrud, D.T. In preparation, 1981. Reducing Air Leakage in Homes: Results from BPA - Midway Energy Conservation Study. Lawrence Berkeley Laboratory Report, LBL-12742.

13. Haywood, L.R. 1980. Selection of a Radon Level Corresponding to 0.02 WL. Paper presented at the Third Workshop on Radon and Radon Daughters Associated with Uranium Mining and Processing, sponsored by the Atomic Energy Control Board of Canada and held at Port Hope, Ontario.

14. National Research Council. 1981. Airborne Radionuclides and Radiation in Buildings. Indoor Pollutants. National Academy Press (National Academy of Sciences), Washington, D.C., IV-14 - IV-26.

15. American Society of Heating, Refrigerating, and Air-Conditioning Engineers (ASHRAE). 1977. ASHRAE Handbook 1977 Fundamentals, Chapter 8.

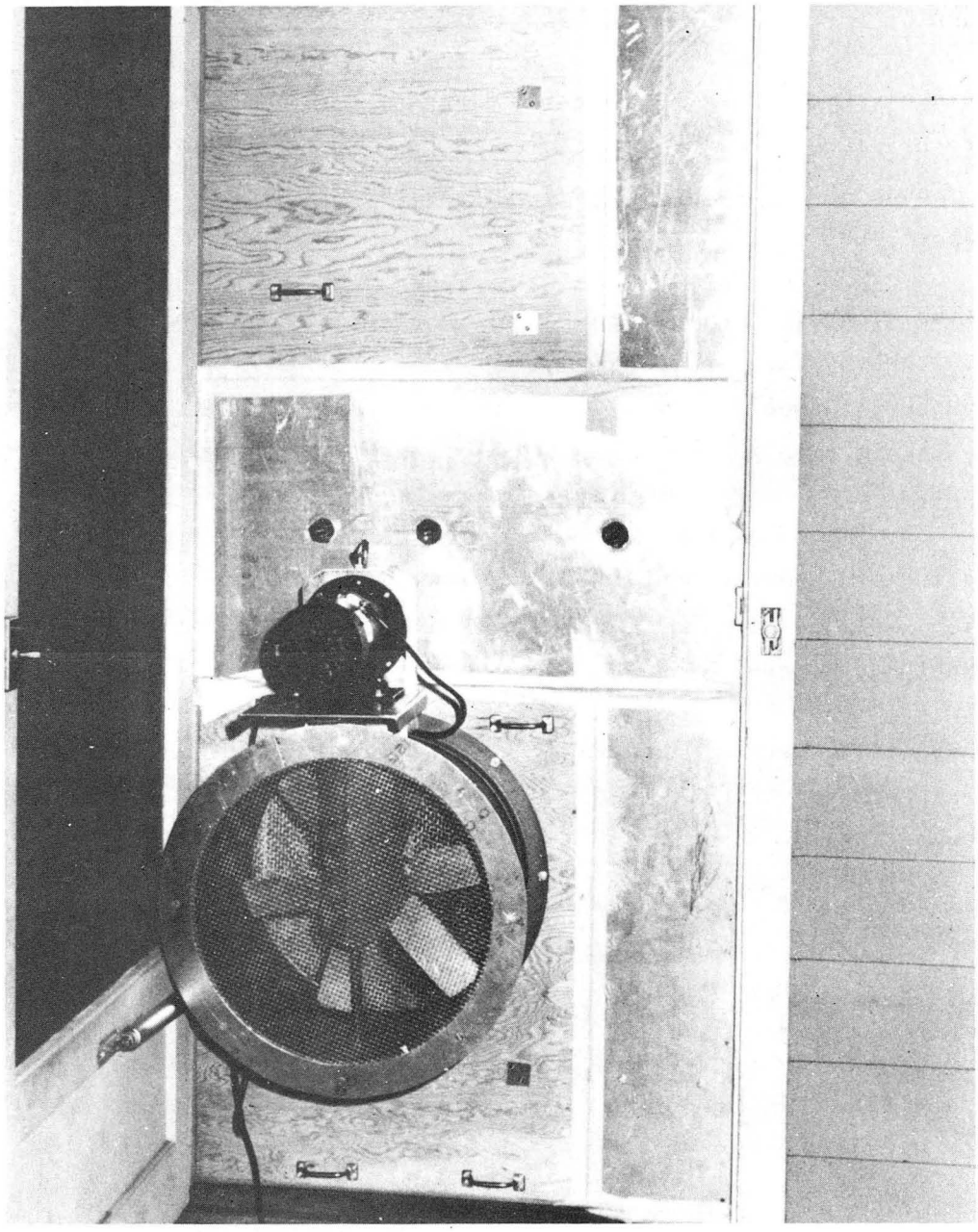

XBB 815-4519

Figure 1. Blower Door Installed in Doorway for fan Pressurzation Test

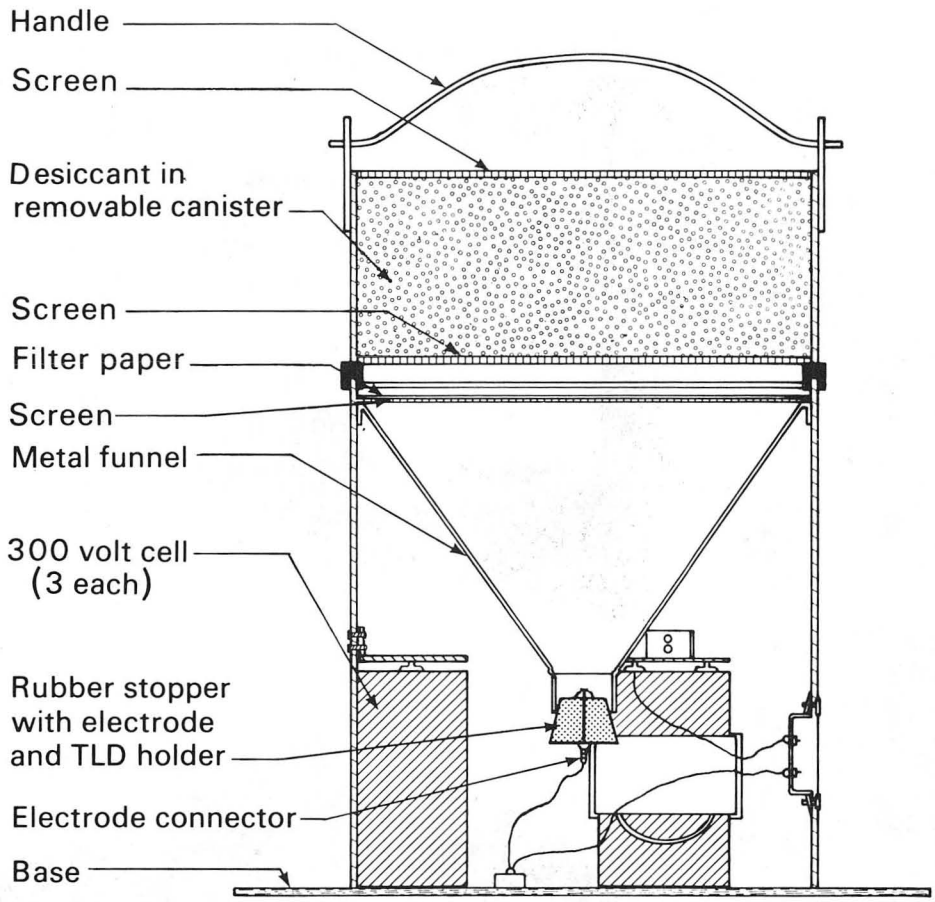

XBL 798-2627A

Figure 2. Schematic Drawing of Passive Environmental Radon Monitor (PERM)

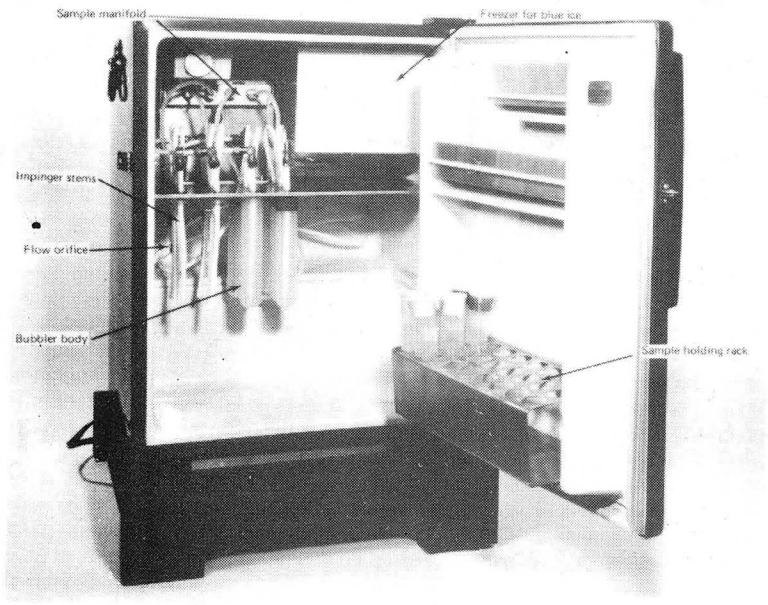

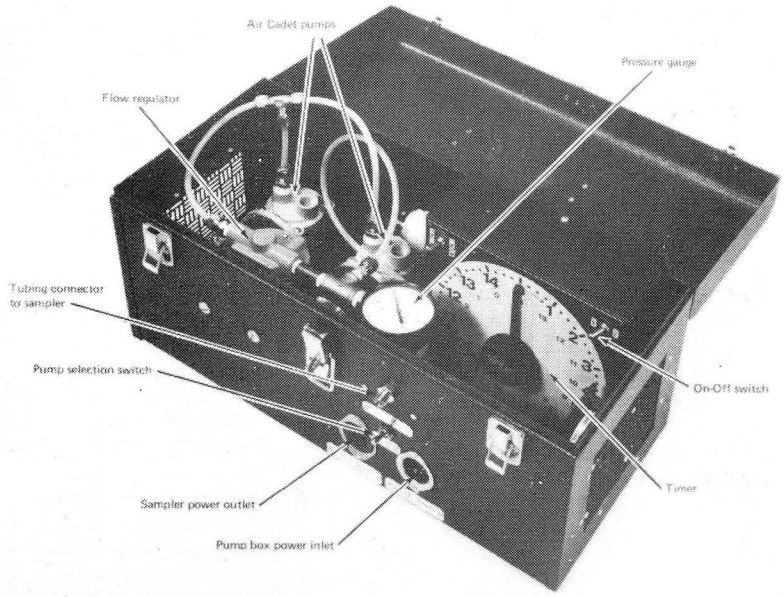

XBB 805-6059B

Figure 3. Above - Refrigerated Formaldehyde Sampler
Below - Formaldehyde Sampler Pump Box

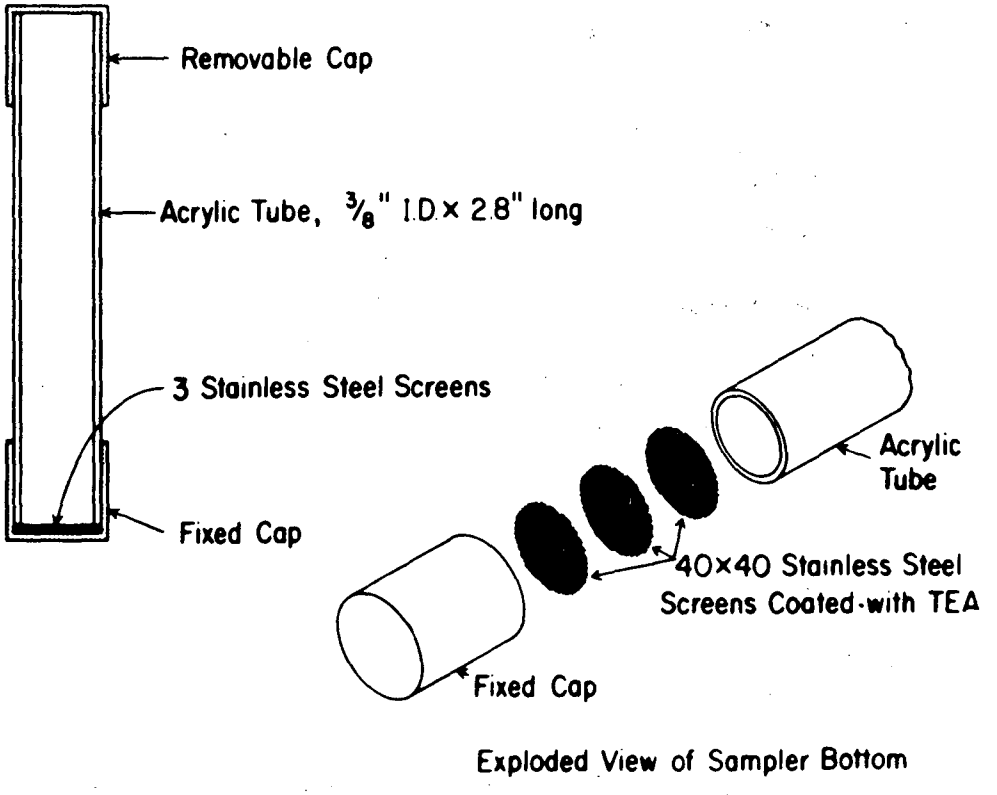

XBL 7910-12498

Figure 4. Schematic Drawing of NO_2 Passive Sampler

Table 1. Summary of sources and types of indoor air pollutants

SOURCES	POLLUTANT TYPES
OUTDOOR	
Stationary Sources	SO_2, NO, NO_2, O_3, Organics, CO, Particulates
Motor Vehicles	CO, NO, NO_2, Pb, Particulates
INDOOR	
Building Constructions Materials	
Concrete, stone	Radon and other radioactive elements
Particleboard	Formaldehyde
Insulation	Formaldehyde, Fiberglass
Fire Retardant	Asbestos
Adhesives	Organics
Paint	Organics, Lead, Mercury
Building Contents	
Heating and cooking combustion appliances	CO, SO_2, NO, NO_2, Particulates
Furnishings	Organics, Odors
Water service; natural gas	Radon
Human Occupants	
Metabolic activity	H_2O, CO_2, NH_3, Organics, Odors
Human Activities	
Tobacco smoke	CO, NO_2, HCN, Organics, Odors, Particulates
Aerosol spray devices	Fluorocarbons, Vinyl Chloride, CO_2, Odors
Cleaning and cooking products	Organics, Odors
Hobbies and crafts	Organics, Odors

Table 2. Summary of house characteristics affecting indoor air quality in twelve houses of the BPA Midway Substation Residential Community

House ID#	Year Built	Volume of Living Space (ft^3)	Number of Occupants	Avg. Smoking[b] Activity	New Furnishings[c]
1	1943	9,450	1	3	0
2	1943	9,450	2	10	0
3	1943	10,700	2	0	2
4	1943	9,450	2	0	carpet
5	1943	10,700	6	30	0
6	1943	10,700	2	20	0
7[c]	1951	10,700	4/4[d]	20/40[d]	0/6[d] and carpet
8	1951	10,700	2	0	0
9	1951	9,450	4	0	4
10	1951	10,700	2	0	0
11[c]	1965	8,700	4/4[d]	40/0[d]	6/0[d] and carpet
12	1968	8,700	0	0	carpet

[a] there were no combustion appliances in these houses.

[b] estimated number of cigarettes smoked indoors per day

[c] number of pieces of particleboard furniture less than two years old; new carpet less than one year old

[d] the double values shown represent changes associated with the occupancy shift occuring between the pre- and post-retrofit periods

Table 3. Selected air quality guidelines

Pollutant	Concentration	Country	Status	Reference
Formaldehyde-Indoor	200 ppb - maximum	U.S. (California)	Proposed	1
	200 ppb - maximum	U.S. (Wisconsin)	Proposed	2
	120 ppb - maximum	Denmark	Recommended	3
	100 ppb - maximum	The Netherlands	Recommended	4
Nitrogen Dioxide-Outdoor	50 ppb - annual average	United States	EPA Standard	5
Radon-Indoor	.015 WL - annual average	United States	Proposed standard for buildings contaminated by uranium processing	6
	.02 WL - annual average	U.S. (Florida)	Recommendation to Governor of Florida for buildings on reclaimed phosphate mining land	7
	.02 WL - annual average	Canada	Policy statement by AECB	8

References

1. State of California, Assembly Bill No. 2586, as ammended in Assembly, April 16, 1980.
2. State of Wisconsin, Department of Labor and Human Relations, Safety and Buildings Division. Proposed Formaldehyde Rule, Wis. Adm. Code, November 1979. (Not enacted as of July 11, 1980.)
3. I. Andersen, "Formaldehyde in the Indoor Environment - Health Implications and Setting of Standards," paper presented at the Indoor Climate Symposium, Copenhagen, Denmark, August 30-September 2, 1978.
4. R. Baars, "The Formal Aspects of the Formaldehyde Problem in the Netherlands," paper presented at the "International Indoor Climate Symposium," Copenhagen, August 30-Spetember 2, 1978.
5. U.S. Environmental Protection Agency, National Primary and Secondary Ambient Air Quality Standards for Nitrogen Dioxide, 40 CFR 50.11.
6. U.S. Environmental Protection Agency, "Interim Cleanup Standards for Inactive Uranium Processing Sites," Federal Register 45, pp. 27366-27368, April 22, 1980.
7. U.S. Environmental Protection Agency, "Indoor Radiation Exposure Due to Radium-226 in Florida Phosphate Lands: Radiation Protection Recommendations and Request for Comment," Federal Register 44, pp. 38664-38670, July 2, 1979.
8. Atomic Energy Control Board (of Canada) (AECB), "Criteria for Radioactive Clean-up in Canada," AECB Information Bulletin 77-2, April 7, 1977.

Table 4. Summary of pre- and post-retrofit leakage and indoor air quality measurements in twelve houses of the BPA Midway Substation Residential Community

House ID#	Sampling Period	Effective Leakage Area (cm^2)	Effective Leakage Area (% Change)	Radon (pCi/l)	HCHO (ppb) Indoor/Outdoor	NO_2 (ppb) Indoor/Outdoor	Relative Humidity (%)
1	Pre-retrofit	426		<1	<5/<5	2/3	45
	Post-retrofit	266	38	1	21/<5	2/3	44
2	Pre-retrofit	364		<1	5/<5	4/3	41
	Post-retrofit	227	38	<1	17/<5	3/2	46
3	Pre-retrofit	407		<1	28/<5	3/2	42
	Post-retrofit	231	43	1	24/<5	3/3	43
4	Pre-retrofit	288		1	12/<5	1/3	38
	Post-retrofit	197	32	2	8/<5	2/3	36
5	Pre-retrofit	374		1	34/<5	4/1	52
	Post-retrofit	337	10	3	16/<5	3/2	38
6	Pre-retrofit	433		2	15/<5	3/2	42
	Post-retrofit	377	13	1	10/<5	3/3	42
7	Pre-retrofit	276		—	<5/<5	<1/3	41
	Post-retrofit	200	28	3	69/<5	3/4	62
8	Pre-retrofit	325		2	19/<5	2/2	47
	Post-retrofit	204	37	3	31/<5	2/3	52
9	Pre-retrofit	203		2	44/<5	1/2	48
	Post-retrofit	185	9	2	49/<5	2/2	54
10	Pre-retrofit	392		<1	<5/<5	3/2	46
	Post-retrofit	241	39	2	19/<5	3/2	49
11	Pre-retrofit	338		1	79/<5	2/2	48
	Post-retrofit	201	41	—	13/<5	1/3	43
12	Pre-retrofit	364		3	<5/<5	2/3	39
	Post-retrofit	179	51	3	7/<5	<1/4	38

This report was done with support from the Department of Energy. Any conclusions or opinions expressed in this report represent solely those of the author(s) and not necessarily those of The Regents of the University of California, the Lawrence Berkeley Laboratory or the Department of Energy.

Reference to a company or product name does not imply approval or recommendation of the product by the University of California or the U.S. Department of Energy to the exclusion of others that may be suitable.

TECHNICAL INFORMATION DEPARTMENT
LAWRENCE BERKELEY LABORATORY
UNIVERSITY OF CALIFORNIA
BERKELEY, CALIFORNIA 94720