LBL-12850
UC-66a

Lawrence Berkeley Laboratory

UNIVERSITY OF CALIFORNIA, BERKELEY

EARTH SCIENCES DIVISION

SUPERCRITICAL HEAT EXCHANGER FIELD TEST (SHEFT), I
FIELD PERFORMANCE DATA ON SHELL-AND-TUBE HEAT
EXCHANGERS IN GEOTHERMAL SERVICE

L.F. Silvester, L.O. Beaulaurier, K.F. Mirk,
and R.L. Fulton

RECEIVED
LAWRENCE
BERKELEY LABORATORY

JUL 17 1981

LIBRARY
DOCUMENTS SECTION

June 1981

TWO-WEEK LOAN COPY

This is a Library Circulating Copy
which may be borrowed for two weeks.
For a personal retention copy, call
Tech. Info. Division, Ext. 6782

Prepared for the U.S. Department of Energy under Contract W-7405-ENG-48

LBL-12850 c.2

DISCLAIMER

This document was prepared as an account of work sponsored by the United States Government. While this document is believed to contain correct information, neither the United States Government nor any agency thereof, nor the Regents of the University of California, nor any of their employees, makes any warranty, express or implied, or assumes any legal responsibility for the accuracy, completeness, or usefulness of any information, apparatus, product, or process disclosed, or represents that its use would not infringe privately owned rights. Reference herein to any specific commercial product, process, or service by its trade name, trademark, manufacturer, or otherwise, does not necessarily constitute or imply its endorsement, recommendation, or favoring by the United States Government or any agency thereof, or the Regents of the University of California. The views and opinions of authors expressed herein do not necessarily state or reflect those of the United States Government or any agency thereof or the Regents of the University of California.

LBL-12850

Supercritical Heat Exchanger Field Test (SHEFT), I

Field Performance Data on Shell-and-Tube Heat Exchangers in Geothermal Service

L. F. Silvester, L. O. Beaulaurier, K. F. Mirk, and R. L. Fulton

Earth Sciences Division
Lawrence Berkeley Laboratory
University of California
Berkeley, California 94720

June 1981

This work was supported by the Assistant Secretary for Conservation and Renewable Energy, Office of Renewable Technology, Division of Geothermal and Hydropower Technologies of the U.S. Department of Energy under Contract No. W-7405-ENG-48.

ABSTRACT

Field performance data on shell-and-tube heat exchangers in geothermal service are presented. The test data were taken for geothermal brine on the tube side and hydrocarbon on the shell side in counterflow for six primary heat exchangers, and for hydrocarbon on the shell side and cooling water on the tube side for the condenser. Test data were for heating isobutane, a 90/10 isobutane/isopentane mixture, and a 80/20 isobutane/isopentane mixture at supercritical conditions in the vicinity of their critical pressure and temperature, and for condensing the same fluids.

The test data were used in a preliminary data analysis to determine the reported heat exchanger performance parameters.

INTRODUCTION

A Rankine cycle employing a secondary working fluid has been the focus of considerable study as a means of producing electrical power from moderate-temperature geothermal resources. Many cycle configurations use conventional shell-and-tube heat exchangers, a hydrocarbon working fluid, and supercritical working fluid conditions; yet performance data on such heat exchangers in actual geothermal service are scarce. Consequently, a program to test and verify the performance of shell-and-tube heat exchangers in geothermal service was established.

The program consists of three parts: Part I is the acquisition of heat exchanger performance data in the form of operating parameters, i.e., temperatures, pressures, flow rates, working fluid composition. Part II is the modeling of the data of Part I. Part III is a final report detailing experimental procedures, cleaning methods, plant operations, etc.

This report is a summary of the data of Part I, and presents the results of a preliminary data analysis. A subsequent report will cover the results of Part II. The test data span the operating conditions typical of a commercial installation. The field tests were conducted at the U. S. Department of Energy's Geothermal Test Facility (GTF) located at East Mesa in California's Imperial Valley.

EXPERIMENTAL SECTION

The field test setup is shown schematically in Figure 1. The test apparatus consists of three fluid loops: brine, hydrocarbon, and cooling water. The three loops are interconnected through the primary brine/hydrocarbon heat exchanger train and the hydrocarbon/cooling water condenser-subcooler train. The heat load is rejected to the atmosphere through a wet cooling tower. The high-pressure (heater) portion of the hydrocarbon loop is separated from the low-pressure (condenser) portion by a pressure-reducing valve in lieu of a turbine.

The primary brine/hydrocarbon heat exchanger train consists of six exchangers, both sides of which are in series and in counterflow, with

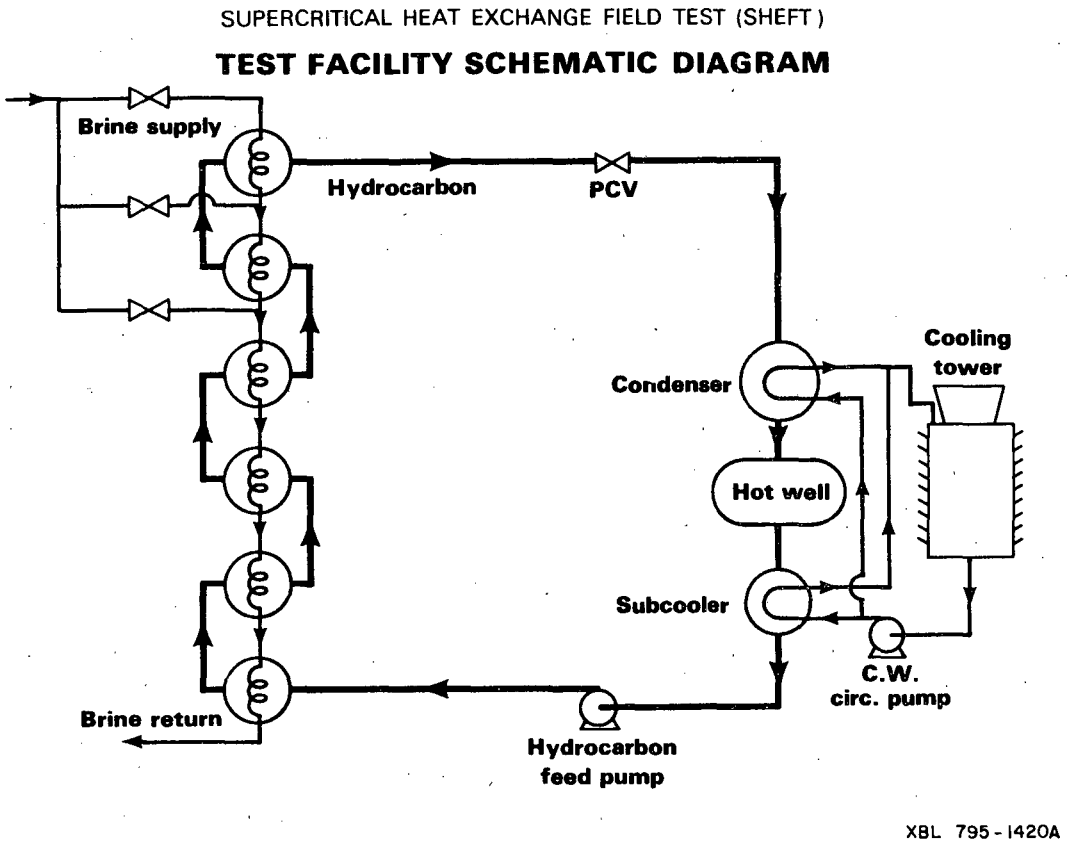

Figure 1. Schematic of Supercritical Heat Exchanger Field Test apparatus.

brine in the tubes and hydrocarbon in the shells. Table 1 lists the main features of the exchangers, and Table 2, the main features of the condenser. The GTF wells Mesa 8-1 and Mesa 6-2 used downhole pumps to supply the brine. The GTF cooling tower supplied the cooling water.

Table 1. Primary heat exchanger details.

No. of tubes per exchanger:	62
No. of passes:	1 shell side, 1 tube side
Tube length:	24 ft
Tube size:	3/4 in O.D., 16 BWG.
Tube material:	carbon steel (SA-214)
Tube pitch:	15/16 in., triangular array
Shell I.D.:	8 3/4 in.
Baffle spacing:	12 in.
Baffle cut:	13/16 in. from center line
Area per exchanger:	292 ft^2
Number of exchangers:	6

Table 2. Condenser details.

No. of tubes:	332
No. of passes:	1 shell side, 1 tube side[a]
Tube length:	24 ft
Tube size:	3/4 in O.D., 14 BWG.
Tube material:	carbon steel (SA-214)
Tube pitch:	15/16 in., triangular array
Shell I.D.:	22 in.
Baffles:	Supports

[a]Side by side.

Hydrocarbons were from industrial suppliers in commercial grades used primarily as aerosol propellants. Mixtures were made at the test site by blending isobutane and isopentane. The resulting compositions were called "nominal" to indicate the mixtures that would have arisen had pure isobutane and pure isopentane been used rather than their commercial grades. For example, a nominal 90/10 mixture was made by mixing 0.9 moles of commerical grade isobutane with 0.1 moles of commercial isopentane.

The shell side (hydrocarbon) of all exchangers and their interconnecting piping were chemically cleaned just prior to the start of testing. This chemical treatment left metal surfaces free of rust and mill scale. The metal surfaces retained their cleaned condition throughout the testing as verified by periodic visual inspections. The tube side of all exchangers were periodically cleaned by hydrolancing. The heat exchanger tubes exposed to the geothermal brine scaled little, whereas cooling water tube scaling in the condenser varied greatly with operating conditions.

Data were recorded by hand; temperatures were taken from mercury-in-glass thermometers, pressures from Ashcroft precision guages, and flow rates from orifice plate, venturi, and turbine flow meters. All instrumentation was calibrated against traceable standards. Hydrocarbon fluid analysis was by gas chromatography performed by Lawrence Berkeley Laboratory (LBL).

For the primary heaters, data station locations are: temperatures of tube side and shell side fluids at the entrance and exit of each exchanger, shell side pressures at the entrance and exit of each exchanger, and tube side pressures at the entrance, midpoint, and exit of the heat exchanger train. Valving in the brine supply to the primary heat exchanger train allowed either four, five, or six exchangers to be in service.

For the condenser-subcooler, data stations are temperature and pressure at the entrance and exit of each exchanger for both shell side and tube side.

Flow rate data stations are: venturi and orifice plate at the primary heat exchanger train exit for the tube side (brine), turbine flow meter and orifice plate at the primary heat exchanger train entrance for the shell side (hydrocarbon), and separate turbine flow meters for the cooling water to the condenser and subcooler.

DATA ANALYSIS

Analysis of the energy transferred as heat within a heat exchanger is given by:

$$Q = U*A*\Delta T_m, \tag{1}$$

where Q is the duty, U is the overall heat transfer coefficient, A is the cross-sectional area perpendicular to the heat flux, and ΔT_m is the mean temperature difference.

For a shell-and-tube exchanger, where the heat capacity, C_p, of <u>both</u> fluids is constant, and U is constant, Equation (1) may be written as

$$Q = U*A*LMTD, \tag{2}$$

where LMTD is the log-mean-temperature difference:

$$LMTD = (T_a - T_b)/Ln\ (T_a/T_b) \tag{3}$$

with $T_a = T_{2,in} - T_{1,out}$ $\quad T_{2,in} > T_{1,out}$,

$T_b = T_{2,out} - T_{1,in}$ $\quad T_{2,out} > T_{1,in}$,

For a heat exchanger where C_p for both fluids is constant and U is constant over the entire exchanger, the LMTD may be computed from the entrance and exit temperatures. For a heat exchanger where C_p for one or

both fluids is not constant, the exchanger is subdivided, or zoned, into widths over which C_p and U are sensibly constant. Equation (2) for a zoned analysis becomes for the ith zone,

$$Q_i = (UA)_i * LMTD_i. \tag{4}$$

PRIMARY HEATERS

Equation (4) was applied to the primary heat exchanger train as follows: The entire heat exchanger train was treated as one exchanger composed of experimental zones represented by the number of series connected exchangers. Equation (4) was applied to each zone. The duty Q_i was set equal to the brine duty. The $LMTD_i$ was computed from the measured terminal temperatures.

For each zone, we computed

$$(UA)_i = Q_i / LMTD_i. \tag{5}$$

From the n zones, the total duty, Q_{tot}, is computed as

$$Q_{tot} = \sum_{i=1}^{n} Q_i \qquad n = 4,\ 5,\ \text{or}\ 6. \tag{6}$$

The LMTD for the entire heat exchanger train is computed as

$$LMTD = Q_{tot} / \sum_{i=1}^{n} (UA)_i \qquad n = 4,\ 5,\ \text{or}\ 6. \tag{7}$$

Finally, the overall heat-transfer coefficient, U_f, is computed as

$$U_f = Q_{tot} / ((n * A_i) * LMTD), \tag{8}$$

where A_i is the area of one exchanger as listed in Table 1.

The results are listed in Tables 3, 4, and 5. Unless otherwise noted, the results are for six exchangers in series. The tabulated results for each condition are the average of six to eight data scans. Overall heat balances for each scan were within $\pm$ 3%. The subscripts "in and "out" refer to entrance and exit values for the entire heat exchanger train.

Table 3. Primary Heater Data Analysis--Experimental Zone, Commerical Isobutane.

Component	Mole %
Propane	0.60
n-Butane	2.56
i-Butane	96.84

T(Br-in) (°F)	T(Br-out) (°F)	M-Br (lbs/hr)	T(Hc-in) (°F)	P(Hc-in) (psia)	T(Hc-out) (°F)	P(Hc-out) (psia)	M-Hc (lbs/hr)	Duty (Btu/hr.10^{-6})	U_f (Btu/hr-Ft^2-°F)	LMTD (°F)
339	205	93200	141	667	314	603	74585	12.77	392	18.6
339	218	93366	131	654	329	601	60694	11.56	364	18.1
336	253	92785	135	645	336	621	43016	8.07	290[a]	23.9
339	208	102357	152	676	311	599	83178	13.76	430	18.2
343	202	99136	152	652	308	571	86598	14.27	427	19.0
343	213	101870	143	639	326	572	71250	13.41	413	18.5
344	239	101006	138	636	341	571	53535	10.89	334	18.6
345	277	101605	137	607	345	585	35216	7.25	222[a]	28.0
345	206	101684	157	656	311	573	86910	14.41	439	18.7
344	206	95408	161	633	307	552	85276	13.54	423	18.3
345	213	95938	147	617	329	550	69123	12.94	395	18.7
338	201	64052	146	584	310	552	53420	8.95	306	16.7
344	207	97556	162	633	309	552	84360	13.67	425	18.3

Note: Br = brine: Hc = hydrocarbon.

[a]Four exchangers in series.

Table 4. Primary Heater Data Analysis--Experimental Zone, Nominal 90/10 Isobutane/Isopentane.

Component	Mole %
Propane	0.54
n-Butane	2.30
i-Butane	86.97
n-Pentane	0.48
i-Pentane	9.71

T(Br-in) (°F)	T(Br-out) (°F)	M-Br (lbs/hr)	T(Hc-in) (°F)	P(Hc-in) (psia)	T(Hc-out) (°F)	P(Hc-out) (psia)	M-Hc (lbs/hr)	Duty (Btu/hr.10^{-6})	U_f (Btu/hr-Ft^2-°F)	LMTD (°F)
346	201	94843	120	685	312	640	80873	14.04	391[a]	30.7
342	202	93051	119	656	323	600	70024	13.30	380	20.0
342	220	80142	118	637	339	603	48776	9.96	327[b]	17.4
343	192	98683	130	651	307	571	84678	15.22	407	21.3
346	203	94921	118	639	318	588	68873	13.85	393	24.1
341	204	70876	124	604	316	577	49646	9.86	325	20.8
343	193	100440	122	626	310	552	78884	15.31	411	21.3
343	218	98397	121	630	329	576	63080	12.65	385[b]	22.5
341	219	75497	135	593	330	566	48097	9.42	325[b]	19.9

Note: Br = brine; Hc = hydrocarbon.

[a]Four exchangers in series.

[b]Five exchangers in series.

Table 5. Primary Heater Data Analysis--Experimental Zone, Nominal 80/20 Isobutane/Isopentane.

Component	Mole %
Propane	0.47
n-Butane	2.00
i-Butane	75.77
n-Pentane	1.02
i-Pentane	20.74

T(Br-in) (°F)	T(Br-out) (°F)	M-Br (lbs/hr)	T(Hc-in) (°F)	P(Hc-in) (psia)	T(Hc-out) (°F)	P(Hc-out) (psia)	M-Hc (lbs/hr)	Duty (Btu/hr.10^{-6})	U_f (Btu/hr-Ft^2-°F)	LMTD (°F)
344	193	96247	126	675	313	599	90590	14.88	391	21.7
345	198	96656	123	684	314	622	88682	14.52	386[a]	25.7
345	204	97186	120	610	317	643	86962	14.01	37[b]	32.0
342	202	85599	127	654	317	603	72851	12.31	352	20.0
344	230	86270	130	635	335	599	53268	10.10	337	17.1
345	193	96560	135	656	307	574	94181	14.96	395	21.6
345	210	96515	133	635	319	575	75374	12.39	386	19.6
343	223	85921	129	612	320	574	55902	10.58	341	17.7
345	196	100502	141	637	303	549	96802	15.20	409	21.2
345	208	100389	130	616	317	550	77817	14.05	397	20.2
346	230	100746	123	603	339	550	58054	11.92	360	18.9
345	206	100603	135	675	316	603	85924	14.26	394	20.6

Note: Br = brine; Hc = hydrocarbon.

[a]Four exchangers in series.

[b]Five exchangers in series.

The reader is cautioned that the tabulated U_f and LMTD are preliminary and should be used with the following caveat. The experimental region is one of high nonlinear C_p for the hydrocarbon; consequently, a zoned analysis is required. Subdivision into experimental zones, however, is inadequate for the high-temperature half of the exchanger train. The resulting U_f and LMTD are intended as estimates of performance and as target values for any reader wishing to do a more sophisticated analysis. Further, no effort was made to satisfy the momentum balance using the shell side and tube side pressure drop data. Part II will address these deficiencies.

CONDENSER

A modified form of Equation (2) was applied to the condenser:

$$Q = U*A*MTD, \tag{9}$$

where Q, U, A, have the same meaning as before, and MTD is the mean temperature difference.

The duty, Q, was set equal to the water duty. The area, A, was taken as the tube area listed in Table 2, except for the half-bundle tests, where external valving allowed only a single tube pass, cutting the heat transfer area in half.

The MTD was computed as

$$MTD = F * LMTD, \tag{10}$$

where LMTD is the log-mean-temperature difference defined by Equation (3), and F is a correction factor defined as

$$F = -a/N_{tp} * \ell n\ (1 + \ell n\ (1 - b)/r), \tag{11}$$

where

$$N_{tp} = 1 \text{ (number of tube passes)},$$

$$r = \frac{T_{hc,sat,in} - T_{hc,sat,out}}{t_{cw,out} - t_{cw,in}},$$

Table 6. Condenser Data Analysis, Commerical Isobutane.

Component	Mole %
Propane	0.33
n-Butane	3.28
i-Butane	96.39

T(cw-in) (°F)	T(cw-out) (°F)	M-cw (lbs/hr)	P(cond) (psia)	T(Hc-in) (°F)	T(Hc-out) (°F)	M-Hc (lbs/hr)	Duty (Btu/hr.10^{-6})	U_f (Btu/hr-Ft^2-°F)	MTD (°F)
110	131	496945	205	212	174	81565	10.50	155	52
111	127	479748	172	171	158	62907	7.59	152	39
80	99	376760	116	239	125	39130	7.08	157	35
87	113	374758	159	171	152	76964	9.65	146	51
84	107	373982	140	215	140	53612	8.43	148	44
107	127	441127	188	206	165	67332	8.88	144	48
116	136	432522	206	204	174	69854	8.57	139	48
98	113	507173	203	198	173	62193	7.48	178[a]	67

Note: cw = cooling water; Hc = hydrocarbon; cond. = condenser.

[a]Half bundle test.

Table 7. Condenser Data Analysis, Nominal 90/10 Isobutane/Isopentane.

Component	Mole %
Propane	0.30
n-Butane	2.97
i-Butane	87.22
n-Pentane	0.45
i-Pentane	9.06

T(cw-in) (°F)	T(cw-out) (°F)	M-cw (lbs/hr)	P(cond) (psia)	T(Hc-in) (°F)	T(Hc-out) (°F)	M-Hc (lbs/hr)	Duty (Btu/hr.10^{-6})	U_f (Btu/hr-Ft^2-°F)	MTD (°F)
119	141	399152	206	211	181	70387	8.71	130	52
102	125	412942	183	200	168	72886	9.43	131	56
95	116	423201	162	207	155	62110	8.85	134	51
79	97	370305	108	221	127	38770	6.63	129	40
82	117	193197	136	205	143	44417	6.76	120	43
119	139	399854	202	212	177	63877	8.08	126	49
99	116	484015	202	207	177	64766	7.98	170[a]	72

Note: cw = cooling water: Hc = hydrocarbon; cond. = condenser.

[a]Half bundle test.

Table 8. Condenser Data Analysis, Nominal 80/20 Isobutane/Isopentane.

Component	Mole %
Propane	0.26
n-Butane	2.55
i-Butane	74.90
n-Pentane	1.05
i-Pentane	21.24

T(cw-in) (°F)	T(cw-out) (°F)	M-cw (lbs/hr)	P(cond) (psia)	T(Hc-in) (°F)	T(Hc-out) (°F)	M-Hc (lbs/hr)	Duty (Btu/hr.10^{-6})	U_f (Btu/hr-Ft^2-°F)	MTD (°F)
113	139	393314	205	210	187	78232	9.81	119	64
98	123	403376	175	213	173	72125	10.20	120	65
84	122	262970	161	210	167	69628	9.99	115	67
78	115	243898	141	191	156	51925	8.88	111	62
76	90	434426	90	227	113	33270	6.30	145	34
82	103	433044	131	239	133	48768	9.03	161	43
106	136	387230	206	243	190	83110	11.53	113	70
94	115	486431	219	234	196	79981	9.8	160[a]	95

Note: cw = cooling water; Hc = hydrocarbon; cond. = condenser.

[a]Half bundle test.

$$p = \frac{t_{cw,out} - T_{cw,in}}{T_{hc,sat,in} - t_{cw,in}},$$

$$a = (1/(r - 1) * \ln((1 - p)/(1 - b)),$$

$$b = p * r,$$

and $T_{hc,sat}$ is the hydrocarbon vapor-liquid saturation temperature at the experimental condenser pressure, and t_{cw} is the cooling water temperature.

The results are listed in Tables 6, 7, and 8. The tabulated results for each test condition are the average of six to eight data scans. Overall heat balances for each scan were within $\pm$ 3%.

The reader is again cautioned that the condenser analysis ignores fouling factors, vapor velocity effects, condenser geometry, etc. Consequently, the results are intended as a guide. A complete analysis will be done in Part II.

FLUID PROPERTIES

The geothermal fluid was a low-salinity brine ($\simeq$1400 ppm NaCl(aq)) and consequently was treated as pure water with fluid properties computed from the Keenan and Keyes[1] equation-of-state for water.

Hydrocarbon properties were computed for the compositions listed in Tables 3 through 8 using a computer code jointly developed by The National Bureau of Standards and LBL. The computer code employs extended corresponding states.

ACKNOWLEDGMENT

We thank the following, without whose assistance this work would have been impossible: From LBL, Robert Davis, Padraic Doyle, Wayne Lee, and Don Lippert for field work, Milt Moebus for field work and procurement, and Ronald Phillips for field-site management and plant operation; from Barber-Nichols Engineering, D. DeLoach, L. Jensen, R. Salazar, and R. Weidemann for field work; Ms. Ruthie Redic from LBL for manuscript preparation and editing; and P. T. Doyle from Heat Transfer Consultants for timely discussion throughout this project.

Lastly, we thank C. McFarland and R. LaSala from the U. S. Department of Energy for their support and encouragement. This work was supported by the Assistant Secretary for Conservation and Renewable Energy, Office of Renewable Technology, Division of Geothermal and Hydropower Technologies of the U.S. Department of Energy under Contract No. W-7405-ENG-48.

REFERENCE

1. J. H. Keenan, F. G. Keyes, P. G. Hill, and J. G. Moore, Steam Tables, Wiley-Interscience, New York, New York, 1978.

This report was done with support from the Department of Energy. Any conclusions or opinions expressed in this report represent solely those of the author(s) and not necessarily those of The Regents of the University of California, the Lawrence Berkeley Laboratory or the Department of Energy.

Reference to a company or product name does not imply approval or recommendation of the product by the University of California or the U.S. Department of Energy to the exclusion of others that may be suitable.

TECHNICAL INFORMATION DEPARTMENT
LAWRENCE BERKELEY LABORATORY
UNIVERSITY OF CALIFORNIA
BERKELEY, CALIFORNIA 94720