LBL-12997
Preprint

Lawrence Berkeley Laboratory
UNIVERSITY OF CALIFORNIA

Engineering & Technical Services Division

Submitted to Review of Scientific Instruments

RECEIVED
LAWRENCE
BERKELEY LABORATORY

DEC 1 1981

LIBRARY AND
DOCUMENTS SECTION

PORTABLE MAGNETIC FIELD DOSIMETER WITH DATA ACQUISITION CAPABILITIES

T.Y. Fujita and T.S. Tenforde

December 1981

TWO-WEEK LOAN COPY

This is a Library Circulating Copy which may be borrowed for two weeks. For a personal retention copy, call Tech. Info. Division, Ext. 6782

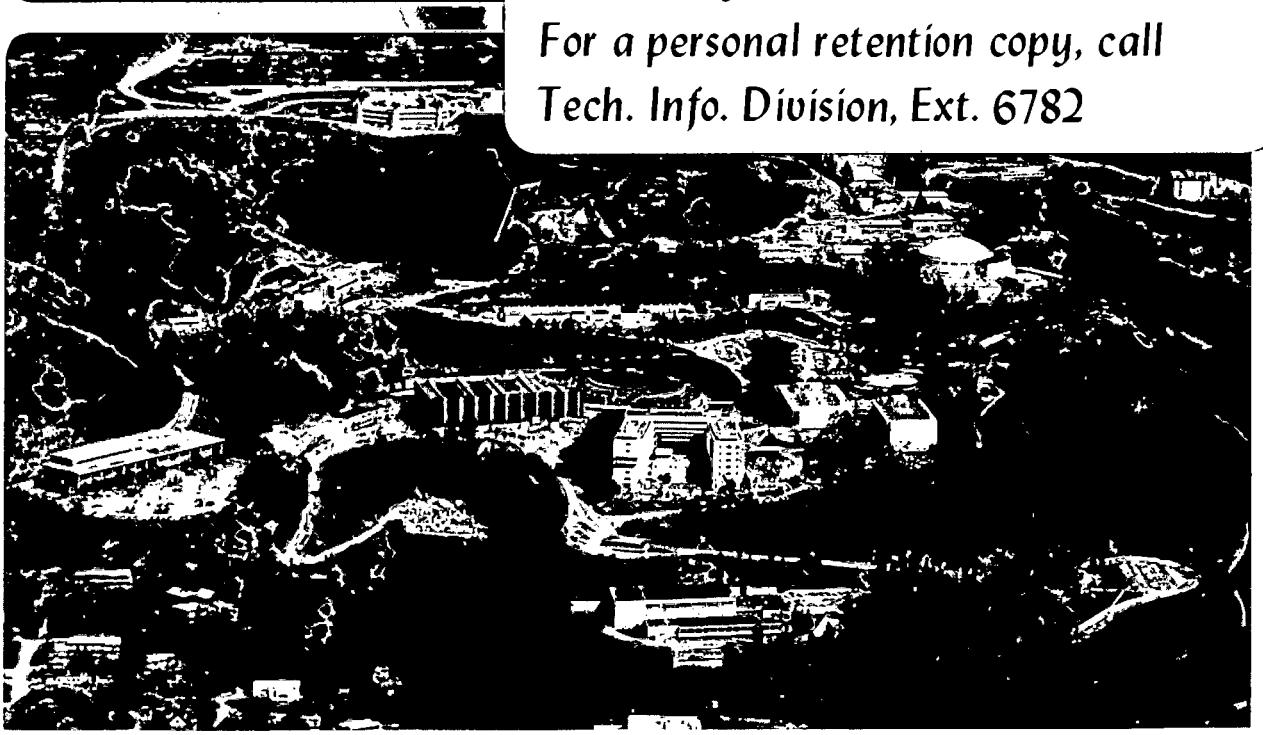

Prepared for the U.S. Department of Energy under Contract W-7405-ENG-48

LBL-12997 c.2

DISCLAIMER

This document was prepared as an account of work sponsored by the United States Government. While this document is believed to contain correct information, neither the United States Government nor any agency thereof, nor the Regents of the University of California, nor any of their employees, makes any warranty, express or implied, or assumes any legal responsibility for the accuracy, completeness, or usefulness of any information, apparatus, product, or process disclosed, or represents that its use would not infringe privately owned rights. Reference herein to any specific commercial product, process, or service by its trade name, trademark, manufacturer, or otherwise, does not necessarily constitute or imply its endorsement, recommendation, or favoring by the United States Government or any agency thereof, or the Regents of the University of California. The views and opinions of authors expressed herein do not necessarily state or reflect those of the United States Government or any agency thereof or the Regents of the University of California.

LBL - 12997

PORTABLE MAGNETIC FIELD DOSIMETER WITH DATA ACQUISITION CAPABILITIES[a)]

T. Y. Fujita* and T. S. Tenforde+

*Department of Instrument Science and Engineering

and

+Biology and Medicine Division

Lawrence Berkeley Laboratory

University of California

Berkeley, California 94720

Running title: Magnetic field dosimeter

Address Correspondence to:

T. Y. Fujita

Department of Instrument Science

Building 29, Room 101

Lawrence Berkeley Laboratory

1 Cyclotron Road

Berkeley, CA 94720

This work was supported by the Office of Energy Research, Health and Environmental Research Division of the U.S. Department of Energy under Contract No. W-7405-ENG-48.

ABSTRACT

Design concepts, engineering specifications and performance test results are presented for a compact magnetic field dosimeter that is suitable for monitoring personnel exposures to steady-state and time-varying magnetic fields. The battery-operated dosimeter contains thin-film Hall sensors that record the magnetic induction (B) along three orthogonal axes. The Hall generators are operated in a pulsed mode, and the time rate of change of the magnetic induction (dB/dt) is determined from values of B recorded during consecutive sampling intervals (typically 75 msec). The pulsed mode operation also serves to reduce battery consumption. The dosimeter contains a programmable microprocessor-based logic circuit and 4,096 12-bit words of permanent and random-access memory. Stored parameters include: (1) average values of B and dB/dt during a preset time interval (typically 5 min); (2) peak values of B and and dB/dt during the preset interval; (3) the number of times that specified threshold levels for these parameters are exceeded. An audible alarm is activated when B or dB/dt exceeds a specified threshold level. Sensitivity factors and threshold levels can be loaded into the dosimeter from a bench-mounted programmable calculator, which is also used at the end of each workday to record and process data stored in the dosimeter's random-access memory.

INTRODUCTION

Several newly-developing technologies for energy production, storage and transmission utilize large DC magnetic fields produced by superconducting magnets. These technologies include thermonuclear fusion reactors, magnetohydrodynamic systems, superconducting generators, superconducting magnet energy storage systems and superconducting transmission lines.[1, 2] During the initial set-up and operation of prototype fusion reactors, the fringe fields at personnel locations can reach levels as high as 0.5 - 1.0 T (1 Tesla = 10^4 Gauss). Large time-varying fields, approaching 1 T/sec, also exist in the vicinity of pulsed-mode fusion reactors. In the other technologies listed above, fields at operator-accessible locations are generally much lower, but can reach 0.05 T at the surface of superconducting magnet energy storage devices. In addition to energy-related technologies, human exposure to large magnetic fields occurs in several research and commercial activities, including cyclotrons, bubble chambers, isotope separation facilities, magnetically-levitated vehicles and magnetic-induction technologies (e.g. induction welding, plastic heat-sealing and induction furnaces for steel production). Possibly the highest level of human exposure occurs at bubble chambers, where operators routinely enter a field of approximately 1 T to change film cassettes.

The proliferation of technologies that involve occupational exposure to large steady-state and time-varying magnetic fields has created a need for a portable dosimetry device with both data acquisition and alarm features. Permanent records of personnel exposure levels would provide a valuable database for retrospective epidemiological studies of potential health effects. In addition, both the data acquisition and alarm features of the dosimeter would provide a means to ensure compliance with magnetic field exposure guidelines. In this report, a description is given of a dosimetry unit that contains both

of these features in a format that is adaptable to the entire range of magnetic field levels encountered under occupational exposure conditions.

I. DESIGN RATIONALE AND SYSTEM ELEMENTS

Design specifications for the dosimeter have taken into account current technology, performance, size, cost and operating life. A schematic representation of this device is presented in Fig. 1. The principal elements of the dosimeter and data recording systems are the battery-driven Hall sensors, operational amplifier, multiplexer, analog-to-digital converter, microprocessor-controlled logic and memory circuits and a universal asynchronous receiver-transmitter interface to a bench-mounted programmable calculator. The programmable calculator is used to enter operational parameters (e.g. range variables and thresholds) and fiducial factors into the portable monitor, and it also serves as a readout station for recording and processing data acquired by the monitor. All components of the dosimetry system are commercially available; the suppliers and model numbers for the principal elements of our initial prototype are listed in Table I.

The dosimeter uses exclusively CMOS logic because of its low power consumption and high noise immunity. The dual-in-line integrated circuit elements contained in the dosimetry unit are packaged on 3 compact printed circuit boards. A nonrechargeable 9.6 V lithium battery is used to power the Hall sensors and signal processing circuitry. The choice of lithium batteries was based on their high energy density and chemical stability. Major components of the dosimeter are fabricated from nonmagnetic materials to avoid forces on the unit in a magnetic field gradient, and to prevent remanent magnetization that would limit measurement accuracy.

In addition to measuring the magnetic induction along 3 orthogonal axes, the portable monitor provides an indirect measurement of the time rate of change

of the field along the same 3 axes. This is accomplished by operating the Hall sensors in a pulsed mode and calculating the change in the magnetic induction between sampling intervals. Although values of dB/dt could be directly measured by incorporating miniature search coils into the portable monitor, the pulsed mode operation of the Hall sensors is a more desirable procedure for measuring dB/dt since it also leads to a significant reduction in power consumption.

II. TRANSDUCERS AND SIGNAL PROCESSING

Hall sensors. Field detection is based on direct measurements of the magnetic induction by 3.18 mm x 2.54 mm thin-film semiconducting Hall plates[3]. The dosimeter contains 3 orthogonal Hall sensors potted in a 1 cm^3 epoxy block. The resistance of each Hall sensor is 40-80Ω, and the power dissipation is 4-8 mW with a driving current of 10 mA.

The nominal linearity of the commercial thin-film Hall sensors is ±3%. Their overall accuracy is also affected by input resistance variations, null voltage errors and temperature variations. Because the control current of the dosimeter is from a constant current supply, the Hall generators are insensitive to variations in the sensor resistance. Null voltage errors are reduced to zero by using a null-voltage balancing network. Temperature effects, which decrease the voltage output by 0.1% per °C, are reduced by operating the Hall sensors in a pulsed mode as described below. With the above operating procedures and material specifications, the overall accuracy of the Hall sensors is expected to be ±3%, and this was confirmed by the performance tests described in the next section.

Amplifier. The Hall-effect sensors are operated in a DC mode with the output leads connected to an operational amplifier. Each of the 3 sensors is provided with an amplifier whose gain can be preset. The output of the Hall generators is 120 mV per Tesla, so that an amplification of approximately 40

is required to provide an output signal at the desired level of 5 V per Tesla. The amplifier stage exhibits a low input current, typically 1 pA, and an input impedance of 10MΩ.

Performance tests were made on the Hall-effect generator and amplifier stage using a calibrated electromagnet. The linearity error (Fig. 2) is within the nominal ±3% manufacturer's specification, and reproducibility of the output is better than ±0.5%. Hysteresis due to magnetization of the Kovar chip carriers (in the integrated circuit packages) and the nickel component leads was found to be less than 0.3% full scale.

Multiplexer. Analog switches are used to scan the amplifier outputs from the 3 Hall sensors for input to the A/D converter. A low "on" resistance of 75Ω and a low leakage current of 400 pA are the main features of the analog switches. Transition time, "on" delay time and injection capacitance effects have a total duration of less than 500 μsec, and field measurements are made after this time.

Analog-digital converter. The 12-bit architecture of the Intersil IM6100 microprocessor makes the selection of a 12-bit A/D converter a convenient choice. Conversion, performed by successive approximation, is guaranteed to be monotonic. Linearity (±½LSB), zero-scale (0.1%) and full-scale (0.1%) errors are all well within those specified for the Hall sensors. Operated in a biopolar mode with complementary output logic, the A/D converter provides a dynamic range of 1:2048 (2^{11}) for the magnitude of B.

III. LOGIC AND MEMORY

Microprocessor. The architecture and instruction set of the Intersil IM6100 microprocessor are similar to the PDP-8 minicomputer. A programmable interface element (PIE) interfaces the A/D converter and the universal asynchronous receiver-transmitter (UART), which transmits serial data to the microprocessor. The PIE provides signals for reading and writing on the data bus, and is programmed to respond to level changes of the A/D converter "end-of-conversion" signal and the UART "data received" and "transmission buffer register empty" signals. In addition, the PIE is triggered by the UART "receiver register empty" signal.

The UART interfaces the microprocessor with a bench-mounted calculator for

transfer of data in conformance with EIA specification RS-232-C. It is hard-wired for one start bit, 8 data bits, 2 stop bits and no parity. The clock frequency has been selected for 9600 operation.

Memory. The microprocessor memory unit consists of 1024 12-bit words of read-only memory (EPROM) and 3072 12-bit words of random-access memory (RAM). The EPROM occupies the high memory locations and contains the monitor, input/output handler and the data acquisition program. Scratch-pad memory, temporary buffers and data storage registers are located in RAM. The capacities of the memory units are represented schematically in Fig. 3.

IV. SOFTWARE

The software has been designed to operate the Hall sensors in a pulsed mode, both to conserve battery power and to permit the computation of dB/dt from successive readings for B. Because the dosimeter contains neither a real-time clock nor a timer, sampling time relies entirely on the software loop time, which is well defined by the microprocessor crystal oscillator. The data acquisition program is written so that all path lengths are equal. The measurement flow diagram consists of the following sequence of events:

A. Select Hall-effect generator and address-select the multiplexer.

B. Delay to allow signal settling time.

C. Sample-and-hold.

D. Deselect Hall-effect sensor.

E. Start A/D conversion.

F. Wait for end-of-conversion.

G. Read data.

H. Perform computations.

I. Store values.

J. Repeat A through I for next reading.

The measured and calculated parameters are as follows:

1. Magnetic induction. Each measurement loop provides a reading of the magnitude and sign of B along one of the 3 orthogonal axes. The sensitivity factor for B is adjustable, and can be chosen such that the 1:2048 dynamic range of the A/D converter covers the entire anticipated span of exposure levels. For example, a range of 10^{-4} to 0.2048 T could be chosen. A single bit change in the output of the A/D converter would then correspond to a 10^{-4} T change in the magnetic field, i.e., the sensitivity would be $\pm 5 \times 10^{-3}$ T. In high-field applications, the operating span could be adjusted upwards to permit detection of fields as large as 2 T.

2. Time rate of change of the magnetic induction. The computation of dB/dt is achieved by dividing consecutive readings of B on each Hall sensor by the sampling interval. The sampling interval is a software-adjustable parameter, and can be chosen to accommodate the anticipated range of dB/dt values. Because of the inertia associated with large magnetic systems such as pulsed-mode fusion reactors, significant transient changes in B within an interval less than 100 msec are not anticipated. Similarly, motion of personnel through a DC field gradient is not expected to be rapid under ordinary operating conditions. In view of these considerations, the sampling interval of 75 msec used in our prototype dosimeter for recording the 3 orthogonal components of B (B_x, B_y, B_z) should provide a suficiently sensitive measure of dB_x/dt, dB_y/dt and dB_z/dt. Another factor that must be considered, however, is the lower limit for recorded values of dB/dt. For example, if a single-bit change in the A/D converter output corresponds to 10^{-4} T, then this change in a 75 msec sampling interval would give $dB/dt = 1.33 \times 10^{-3}$ T/sec. This lower threshold for dB/dt measurements may not be adequate in certain applications. In this event, the sensitivity can be enhanced simply by computing dB/dt using values of B separated by several

sampling intervals. In the above example, if the one-bit change in the A/D converter output was recorded between the first and tenth sampling intervals, then this change would give $dB/dt = (10^{-4}\ T)/(0.75\ sec) = 1.33 \times 10^{-4}\ T/sec$.

3. Magnitudes of B and dB/dt. The microprocessor computes and records the square of the magnitudes of B and dB/dt:

$$B^2 = B_x^2 + B_y^2 + B_z^2$$

and $$\left|\frac{dB}{dt}\right|^2 = \left(\frac{dB_x}{dt}\right)^2 + \left(\frac{dB_y}{dt}\right)^2 + \left(\frac{dB_z}{dt}\right)^2$$

In order to conserve computation time and program memory, square-root operations to obtain $|B|$ and $|dB/dt|$ are left for the bench-mounted calculator at the read-out station.

4. Peak detection. Each reading for $|B|^2$ and each computed value for $|dB/dt|^2$ is compared with the previously recorded peak value. If a new peak value is found, it becomes the new basis for comparison.

5. Alarm threshold. The software is designed to permit the assignment of threshold values for $|B|^2$ and $|dB/dt|^2$, above which an audible alarm is activated. In the current design, 2 threshold levels can be assigned for each of these parameters. The lower threshold value is considered to be a field level where precautionary measures are required. A record is kept of the number of times that the lower threshold is exceeded. The upper threshold is considered to represent a value of B or dB/dt that exceeds the allowable limit. A 2-tone audible alarm is activated to warn the operator whenever either of the limits is exceeded.

6. Data storage. The memory capacity of the present dosimetry unit is not adequate to store all of the recorded values of the parameters listed above if a short sampling interval is used. Therefore, the software has been designed to permit RAM storage of the average values of the 3 orthogonal components of B

and dB/dt over a longer preset interval of time. In the current design, this storage interval has been chosen to be 5 min, and the recorded parameters include (1) average values of $|B_x|$, $|B_y|$, $|B_z|$ and $|B|^2$; (2) average values of $|dB_x/dt|$, $|dB_y/dt|$, $|dB_z/dt|$ and $|dB/dt|^2$; (3) peak values of $|B|^2$ and $|dB/dt|^2$ during the storage interval; (4) the number of times that the lower threshold values of $|B|^2$ and $|dB/dt|^2$ are exceeded within the storage interval.

V. READOUT STATION

A programmable desktop calculator with self-contained printer, tape cartridge and 16-character display provides a suitable readout unit for the portable dosimetry unit. In the initial prototype development, a Hewlett-Packard 9815 calculator has been used as the fixed readout station. Data is retrieved from the RAM through an RS-232-C serial interface.

Data calculations performed by the readout unit include (1) calculation of $|B|$ and $|dB/dt|$ from the squared values stored in RAM; (2) summation over time of $|B|$. The second set of calculations is of special interest since it provides a measure of the integrated field exposure. All operations performed by the readout station follow the sequence:

A. Read a block of data.

B. Perform computations.

C. Write data on cassette.

D. Repeat steps A through C for next block of data.

Table II provides a summary of the division of data computation routines between the dosimetry unit and the readout station. In addition to data processing and storage, a major function of the readout station is to enter operational parameters such as sensitivity factors, sampling intervals and thresholds into the portable dosimeter via the UART interface.

VI. MECHANICAL AND OPERATIONAL SPECIFICATIONS

Size. The first portable unit fabricated in our laboratory, on which the performance tests described below were carried out, weighs 1.1 kg and has dimensions of 8.26 cm (height) x 15.39 cm (width) x 15.88 cm (depth). A second portable dosimeter has been fabricated using small rechargeable nickel-cadmium batteries to reduce the weight and size of the unit. The second unit has a weight of 417 g and dimensions of 15.50 cm (height) x 9.00 cm (width) x 4.50 cm (depth). This size is sufficiently unobtrusive to permit the dosimeter to be worn by personnel as a belt-mounted unit. Apart from changing to a rechargeable battery, the design and construction of the second unit is identical to that of the first prototype unit. A further twofold reduction in size could be gained by using integrated circuits in their chip form or by employing hybrid circuit technology.

Operating life. The operating life of the portable dosimeter depends upon the power dissipation of the hardware and the discharge characteristics of the battery. In the current pulsed mode of operation in which the Hall sensors are activated for a total time of 2.15 msec during each 75 msec sampling interval (a 3% duty cycle), the power dissipated by the sensors is 120-240 μW. The remainder of the hardware consumes 50 mW continuously. Under these conditions, the initial prototype unit can be operated 24 hr per day for a minimum period of one month with a single 9.6 V lithium battery. The second prototype unit, which contains a 9 V nickel-cadmium battery, can be operated continuously for 8 hr before recharging.

VII. PERFORMANCE TESTS

The accuracy of the assembled dosimetry unit in recording both stationary and time-varying magnetic fields was tested using a calibrated electromagnet. This electromagnet produced a vertical field that was uniform to within 0.1% at the location of the dosimeter Hall sensors.

In Table III, the field strength recorded by the dosimeter Hall sensor

that was positioned transverse to the lines of magnetic induction is compared with the reference field strength measured independently by the search coil technique[4,5] and by a Hall probe attached to a Bell Model 620 gaussmeter (F. W. Bell Co., Orlando, Florida). The field strength recorded by the search coil and the gaussmeter were in exact agreement. The dosimeter measurements were also found to be in close agreement at low field levels ($\lesssim$ 0.5 T). However, at higher field levels, the dosimeter readings exhibited a progressively larger negative deviation from the field values determined by the other two independent techniques. The deviation of the dosimeter reading in a reference field of 1.07 T was -6.8%. The probable explanation for the dosimeter's lack of accuracy in recording high field levels is the presence of small amounts of ferromagnetic materials in the integrated circuit boards, as indicated by a small remanent field when the dosimeter was removed from the calibrated electromagnet.

The accuracy with which the dosimeter can record magnetic field strength over an extended interval of time was also evaluated. The dosimeter was placed in the calibrated electromagnet and given an integrated exposure of 20.92 T - min using 3 field levels applied over a 110 min interval (0.105 T for 49.3 min, 0.215 T for 36 min and 0.320 T for 25 min). The time integral of the field recorded by the dosimeter was 20.99 T-min, which differed by only 0.3% from the calculated cumulative exposure.

The response of the dosimeter to time-varying fields was tested by ramping the calibrated electromagnet to give values of dB/dt ranging from 0.009 to 0.015 T/sec. In 5 field ramps, the average value of dB/dt determined from the search coil measurements of magnetic induction was 0.0115 T/sec. The average value of dB/dt recorded by the dosimetry unit's Hall sensor that was positioned transverse to the field lines was 0.0117 T/sec. The values of dB/dt recorded by the dosimetry unit and determined from search coil measurements thus agreed to within 1.7%.

VIII. DISCUSSION

In summary, the portable magnetic field dosimeter at its current stage of development is capable of recording fields up to 1 T with an accuracy of better than 7%. As totally nonmagnetic chips and carriers for the integrated circuit boards become commercially available, the accuracy of the assembled dosimetry unit should approach the ±3% accuracy exhibited by the Hall sensors and amplifier stage.

Two additional refinements of the dosimetry unit that could be made with existing technology are the following: (1) the compactness of the portable unit can be improved through the use of hybrid circuits or integrated circuits in their chip form; (2) the recorded magnetic field parameters can be extended to include gradients by incorporating 3 pairs of Hall sensors with a precise center-to-center spacing along each of the orthogonal axes.

One noteworthy feature of the dosimetry system described in this report is its versatility and its potential adaptability to the measurement of other types of electromagnetic fields and chemical agents that pose a health risk in an occupational environment. In this context, the principal advantage of the portable dosimetry unit is the design of its logic and memory circuits, which can accept and record the digitized signals from a wide variety of analog transducers.

ACKNOWLEDGMENTS

Development of the magnetic dosimeter was carried out under the direction of F. S. Goulding. The participation of A. K. Biocca in the initial design of the dosimetry unit, and of M. D. Breen and A. B. Geyer in software development, is gratefully acknowledged.

This work was supported by the Office of Energy Research, Health and Environmental Research Division of the U.S. Department of Energy under Contract No. W-7405-ENG-48.

FOOTNOTE AND REFERENCES

a) Research sponsored by the Office of Energy Research, Health and Environmental Research Division, of the U. S. Department of Energy under Contract No. W-7405-ENG-48 with the Lawrence Berkeley Laboratory.

1 E. L. Alpen, Chapter 3 in Magnetic Field Effects on Biological Systems, edited by T. S. Tenforde (Plenum Press, New York, 1979), pp. 25-32.

2 W. Hassenzahl, M. W. Mahaffy, and W. Weihofen, Evaluation of Environmental Control Technologies for Magnetic Fields. U. S. Department of Energy Report No. DOE/EV-0029 (National Technical Information Service, Springfield, Virginia, 1978).

3 Proc. Conf. Hall Effect Applications, Solid State Elec. 9, 339 (1965).

4 J. DePhanger, R. K. Wakerling, and A. Guthrie, Chapter 2 in Magnets and Magnetic Measuring Techniques, edited by R. K. Wakerling and A. Guthrie (National Nuclear Energy Series 1 - 2, Oak Ridge, Tennessee, 1951), pp. 48-143.

5 Magnetism and Metallurgy, Vol. 1, edited by A. E. Berkowitz and E. Kneller (Academic Press, New York, 1969), pp. 160-163 and 205-217.

TABLE I. Dosimeter components

Components	Supplier[a]	Model
Hall generator	F. W. Bell	FH-301-040
Lithium battery	Electrochem	BCX-D
Multiplexer	Analog Devices	AD7510DIJN
A/D Converter	National Semiconductor	AD1210CD
Microprocessor	Intersil	IM6100IPL
PIE[b]	Intersil	IM6101AIPL
UART[c]	Intersil	IM6403AIPL
EPROM[d]	Intersil	IM6653AIJG
RAM[e]	Harris	HM1-6514-5
Readout calculator	Hewlett-Packard	9815S

(a) Reference to commercial products does not constitute or imply endorsement or recommendation

(b) Peripheral interface element

(c) Universal asynchronous receiver-transmitter

(d) Erasable read-only-memory

(e) Random-access-memory

TABLE II. Division of data set computation routines between the dosimeter and the readout station[a]

PORTABLE DOSIMETER
$\lvert B_x \rvert$, $\lvert B_y \rvert$, $\lvert B_z \rvert$ (average values)
$\lvert B \rvert^2$ (average, peak and number of suprathreshold values)
$\lvert dB_x/dt \rvert$, $\lvert dB_y/dt \rvert$, $\lvert dB_z/dt \rvert$ (average values)
$\lvert dB/dt \rvert^2$ (average, peak and number of suprathreshold values)
READOUT UNIT
$\lvert B \rvert$ (average and peak values)
$\lvert dB/dt \rvert$ (average and peak values)
$\int \lvert B \rvert dt$ (summation for 8 hr)

[a] In the current prototype dosimeter, the average values, peak values and number of suprathreshold values are based on a 5 min storage period, with data obtained at 75 msec sampling intervals.

TABLE III. Dosimetry unit tests in a calibrated electromagnet

Reference field[a] (Tesla)	Dosimeter reading (Tesla)	% difference
0.213	0.213	0
0.318	0.316	-0.6
0.425	0.418	-1.6
0.536	0.521	-2.8
0.640	0.621	-3.0
0.750	0.718	-4.3
0.855	0.814	-4.8
0.963	0.907	-5.8
1.070	0.997	-6.8

(a) Field calibrations were carried out by independent measurements with a search coil and a Hall-effect gaussmeter.

FIGURE LEGENDS

Fig. 1 Block diagram of portable dosimetry unit.

Fig. 2 Output voltage (V) of the Hall-effect generator and amplifier stage is plotted as function of magnetic field strength (B).

Fig. 3 Map of dosimeter's erasable read-only-memory (EPROM) and random-access memory (RAM).

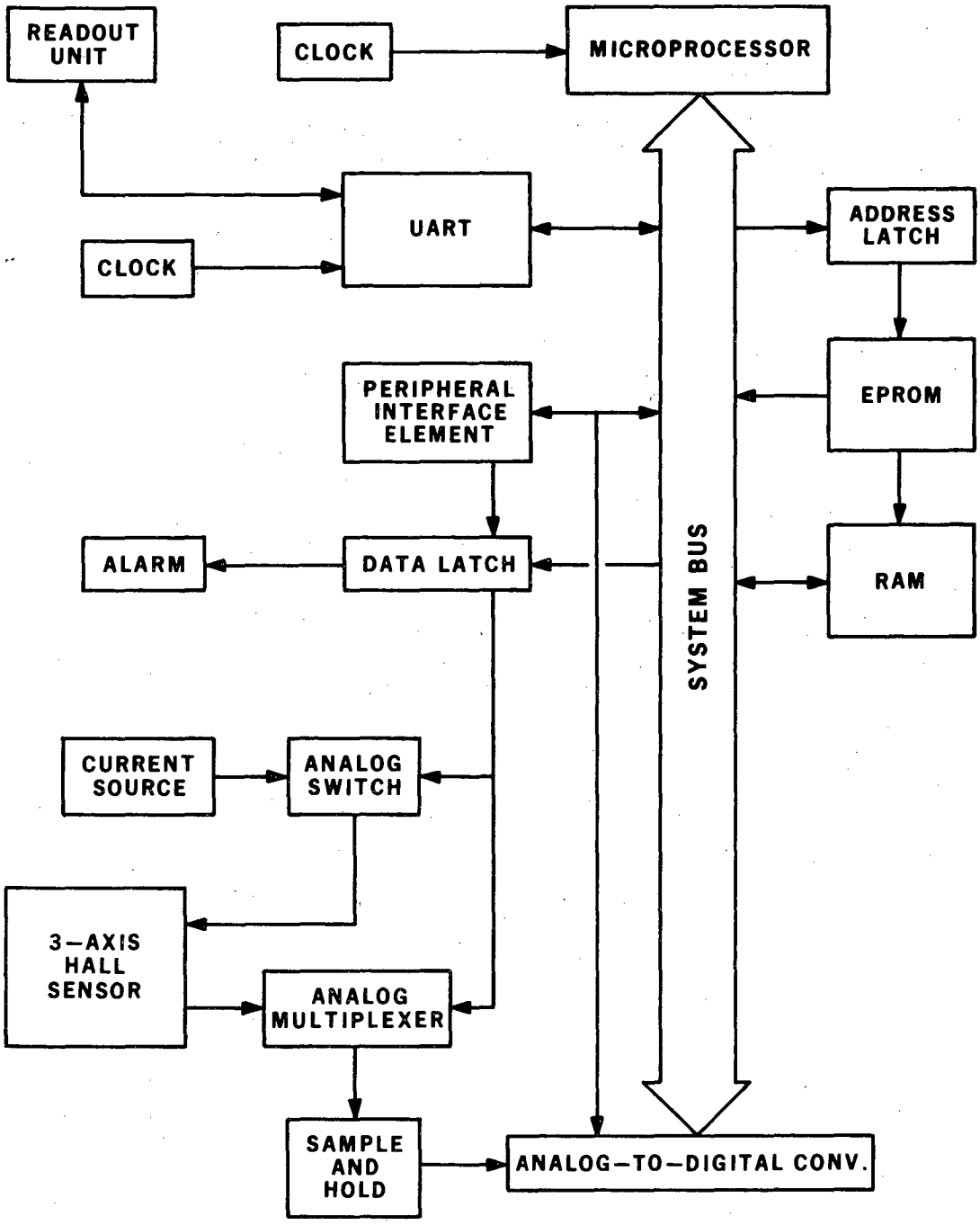

MAGNETIC DOSIMETRY SYSTEM

XBL 817-10870

FIGURE 1

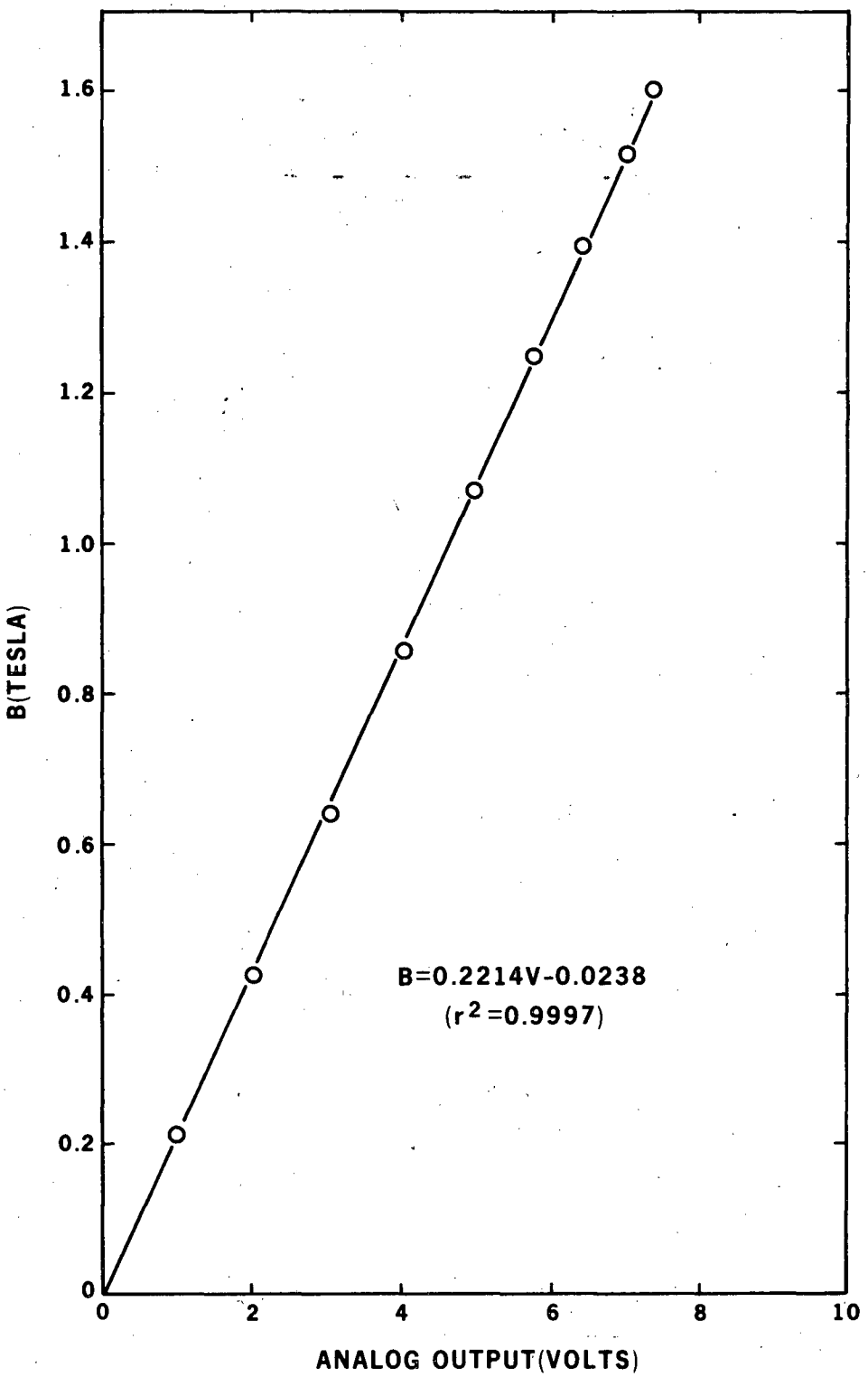

XBL 817-10869

FIGURE 2

DOSIMETER MEMORY MAP

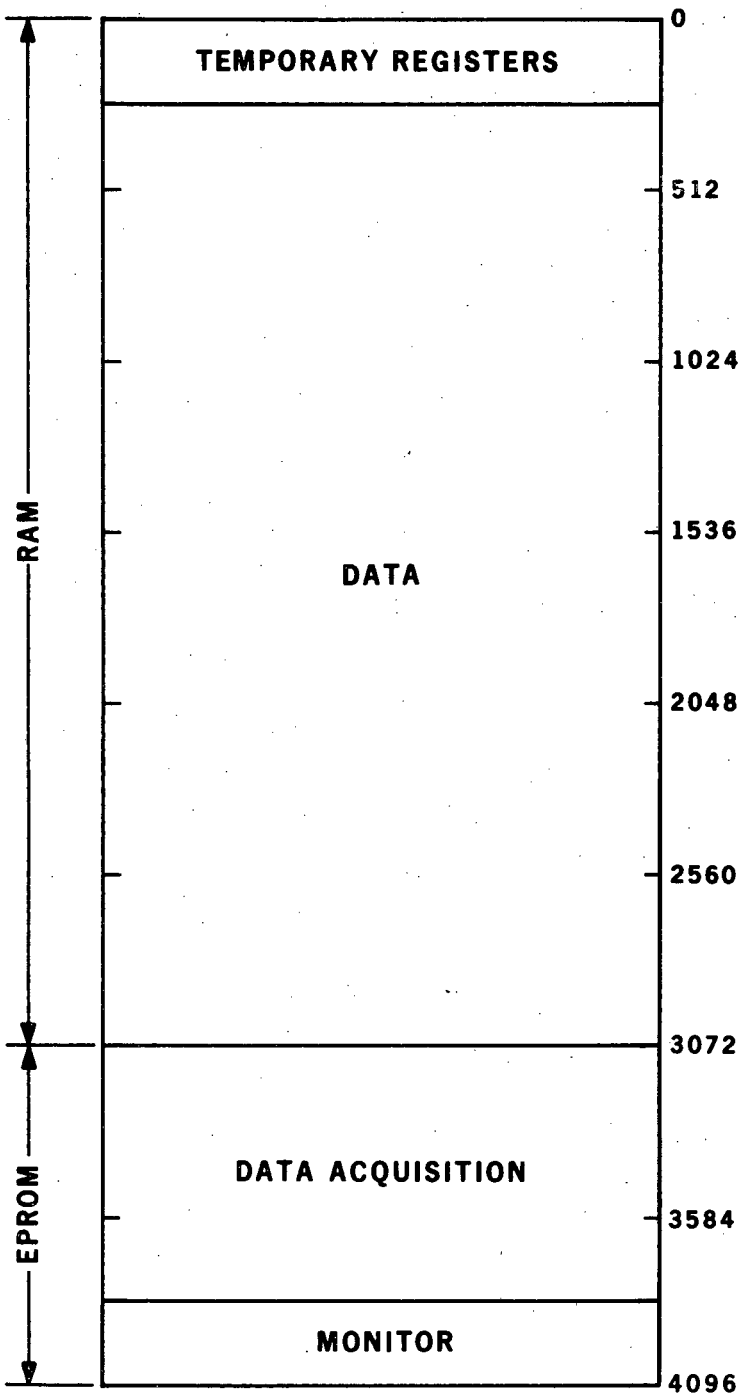

XBL 817-10868

FIGURE 3

This report was done with support from the Department of Energy. Any conclusions or opinions expressed in this report represent solely those of the author(s) and not necessarily those of The Regents of the University of California, the Lawrence Berkeley Laboratory or the Department of Energy.

Reference to a company or product name does not imply approval or recommendation of the product by the University of California or the U.S. Department of Energy to the exclusion of others that may be suitable.

TECHNICAL INFORMATION DEPARTMENT
LAWRENCE BERKELEY LABORATORY
UNIVERSITY OF CALIFORNIA
BERKELEY, CALIFORNIA 94720