LBL-13000 c.2
Preprint

Lawrence Berkeley Laboratory

UNIVERSITY OF CALIFORNIA

RECEIVED
LAWRENCE
BERKELEY LABORATORY
AUG 24 1981
LIBRARY AND
DOCUMENTS SECTION

Materials & Molecular Research Division

To be published as a Chapter in Electron Distribution in Molecules. Michael Hall, ed. Plenum Press, 1982.

THE STUDY OF MOLECULAR ELECTRON DISTRIBUTION BY X-RAY PHOTOELECTRON SPECTROSCOPY

William L. Jolly and Albert A. Bakke

July 1981

TWO-WEEK LOAN COPY

This is a Library Circulating Copy which may be borrowed for two weeks. For a personal retention copy, call Tech. Info. Division, Ext. 6782

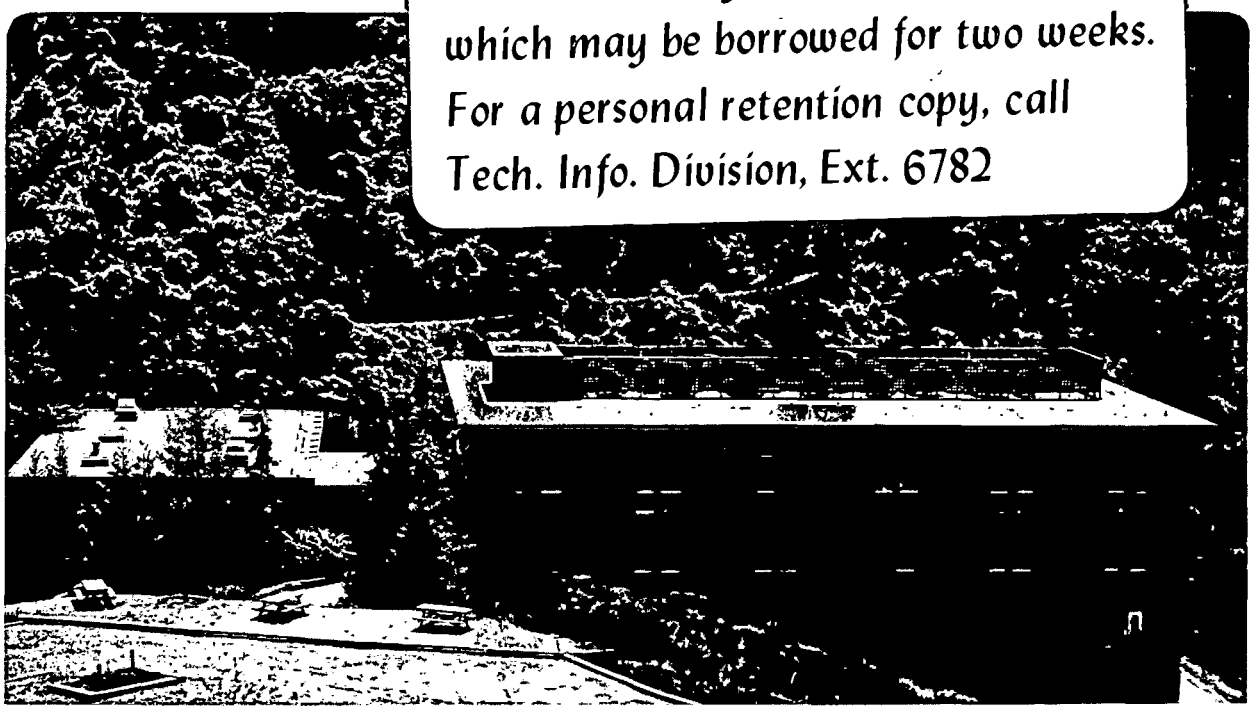

LBL-13000 c.2

Prepared for the U.S. Department of Energy under Contract W-7405-ENG-48

DISCLAIMER

This document was prepared as an account of work sponsored by the United States Government. While this document is believed to contain correct information, neither the United States Government nor any agency thereof, nor the Regents of the University of California, nor any of their employees, makes any warranty, express or implied, or assumes any legal responsibility for the accuracy, completeness, or usefulness of any information, apparatus, product, or process disclosed, or represents that its use would not infringe privately owned rights. Reference herein to any specific commercial product, process, or service by its trade name, trademark, manufacturer, or otherwise, does not necessarily constitute or imply its endorsement, recommendation, or favoring by the United States Government or any agency thereof, or the Regents of the University of California. The views and opinions of authors expressed herein do not necessarily state or reflect those of the United States Government or any agency thereof or the Regents of the University of California.

THE STUDY OF MOLECULAR ELECTRON DISTRIBUTION BY X-RAY PHOTOELECTRON SPECTROSCOPY

William L. Jolly and Albert A. Bakke

Department of Chemistry, University of California,
and the Materials and Molecular Research Division,
Lawrence Berkeley Laboratory, Berkeley, CA 94720

INTRODUCTION

A molecule contains two kinds of electrons: valence electrons and atomic core electrons. The valence electrons occupy molecular orbitals and are more or less delocalized on the various atoms of the molecule, whereas the core electrons are highly localized on individual atoms of the molecule. In gas-phase X-ray photoelectron spectroscopy (XPS), one irradiates a sample chamber containing the molecules under study with an approximately monochromatic beam of X-rays and measures the kinetic energy distribution of the ejected electrons.[1-3] The spectrum is a plot of electron counting rate as a function of kinetic energy, E_K. Peaks are observed corresponding to electronic levels with binding energies (E_B) less than the X-ray photon energy, $h\nu$. By use of the Einstein relation, $h\nu = E_B + E_K$, one can readily calculate the binding energy corresponding to each peak. The X-ray has enough energy to eject not only valence electrons, but also some core electrons. The main use of XPS is in the determination of core electron binding energies, and this paper will be concerned with the information that one can glean from the core binding energies of molecules.[4]

It is well known that core electrons are not significantly involved in chemical bonding, and therefore one might well ask why chemists should have any interest in measuring their binding energies. The answer lies in the fact that the binding energy of a particular core level of an atom is a function of the chemical environment of the atom. On going from one molecule containing a particular element to another containing the same element, the core binding energy changes. In the case of a molecule containing atoms of the same element with markedly different bonding, the binding

This work was supported by the Division of Chemical Sciences, Office of Basic Energy Sciences of the U. S. Department of Energy under Contract No. W-7405-ENG-48, and by the National Science Foundation Grant CHE-7917976.

This manuscript was printed from originals provided by the authors.

energies corresponding to the different atoms will in general be different. For example, consider Figure 1, which shows the carbon 1s region of the X-ray photoelectron spectrum of the complex $(CH_2)_3CFe(CO)_3$, which has the following structure

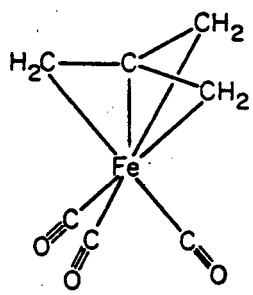

The three main peaks on the right side of the spectrum correspond to the three different kinds of carbon atoms in the molecule.[5] The strong peak, at low binding energy, corresponds to the three CH_2 carbon atoms of the $(CH_2)_3C$ ligand. The weak peak, at intermediate binding energy, corresponds to the central carbon atom of the ligand. And the peak at relatively high binding energy, which has lost some intensity to the shake-up peaks shown on the left side of the spectrum, corresponds to the three CO carbon atoms. The question to be considered now is: What can one learn about molecular electron distribution from binding energies obtained from spectra such as this?

QUANTITATIVE EXPRESSIONS FOR BINDING ENERGIES

If, during the ejection of a core electron from an atom A in a molecule, all the other electrons in the molecule remained frozen in their original positions, the core binding energy would be precisely equal to the potential, V(A), at the site of the core electron of atom A in the ground-state molecule. Of course, the other electrons do not remain frozen. As a consequence of the ionization, they tend to flow toward the core hole and thus reduce the energy required for electron ejection from atom A. The energy associated with this flow is the electronic relaxation energy associated with the core ionization, $E_R(A)$, and we may write

$$E_B(A) = V(A) - E_R(A) \tag{1}$$

or, for a difference (chemical shift) in binding energy,

$$\Delta E_B(A) = \Delta V(A) - \Delta E_R(A) \tag{2}$$

As a good approximation, the quantity $\Delta V(A)$ may be replaced by

$\Delta V(A)_{val}$, the change in potential due to the change in the distribution of the molecule's valence electrons (and of the cores of all the atoms except atom A).

$$\Delta E_B(A) = \Delta V(A)_{val} - \Delta E_R(A)$$

This is a good approximation because the potential at a core site in atom A due to the other core electrons of atom A is essentially independent of chemical environment.[6] The quantity $\Delta V(A)_{val}$ may be estimated with various degrees of accuracy, using procedures ranging in sophistication from ab initio quantum mechanical calculations to calculations based on estimated atomic charges. For example, by assuming that atom A has a radius r and a charge Q_A and that all other atoms are point charges Q_B, we may write

$$\Delta E_B(A) = \left\langle\frac{1}{r}\right\rangle \Delta Q_A + \Delta \sum_{B \neq A} (Q_B/R_{AB}) - \Delta E_R(A) \qquad (3)$$

This equation has been used at various levels of approximation to correlate binding energies with atomic charges. At the highest level of approximation, all three terms of the equation are used. The relaxation energy term, $\Delta E_R(A)$, can be estimated from experimental Auger parameters,[7,8] from polarizability data,[8] or by a calculational method analogous to the transition-state method of Slater.[9] Because this relaxation term is often the smallest term in the equation, it is fairly common practice to assume that ΔE_R = 0, corresponding to the following equation.

$$\Delta E_B(A) = \left\langle\frac{1}{r}\right\rangle \Delta Q_A + \Delta \sum_{B \neq A} (Q_B/R_{AB}) \qquad (4)$$

In fact, the second term in the equation is usually smaller than the first and, at the lowest level of approximation of equation 3, the second term is ignored, leading to the following approximate equation:

$$\Delta E_B(A) = \left\langle\frac{1}{r}\right\rangle \Delta Q_A \qquad (5)$$

BINDING ENERGY-ATOMIC CHARGE CORRELATION

There are two main ways of using equations 3, 4, and 5. In one way, binding energies for a particular element are obtained for a series of compounds, the atomic charges of these compounds are estimated by some procedure, and then an appropriate function of the binding energy (depending on the equation used) is plotted against Q_A. For example, the correlation of the carbon 1s binding energies of some simple carbon compounds with carbon atomic charges is shown in Figure 2.[10] The quantity ΔE_B - V is plotted

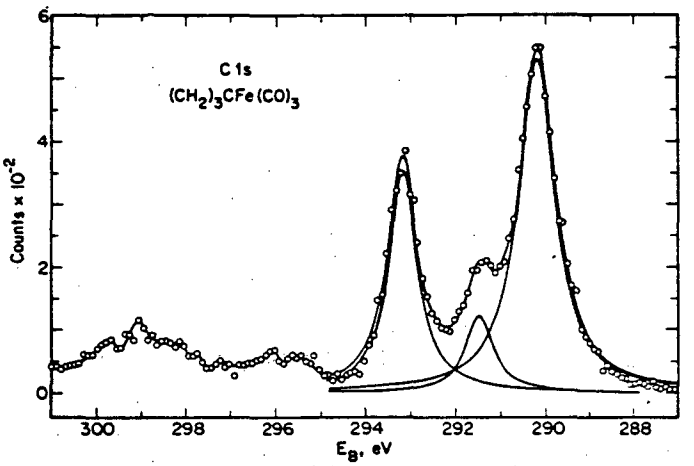

Fig. 1. Carbon 1s spectrum of trimethylene-methaneiron tricarbonyl, deconvoluted using Lorentzian curves. The relative intensities of the three peaks are 2.96:1:5.72. Reproduced with permission from ref. 5.

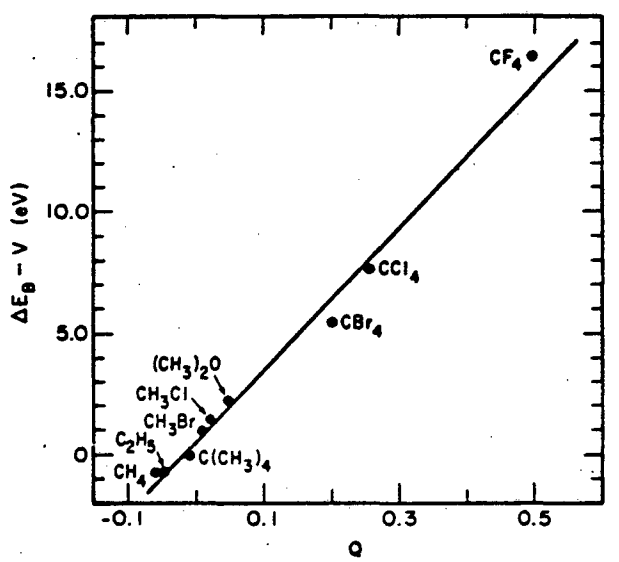

Fig. 2. Plot of ΔE_B - V vs. Q for carbon 1s binding energies. Charges calculated by CHELEQ method. Reproduced with permission from ref. 10.

vs. Q; this is equivalent to the use of equation 4. The charges were estimated using a simple electronegativity equalization procedure.[11] The main value of a plot such as that in Figure 2 is to verify that the binding energy data are consistent with the method used for estimating atomic charges. However, any reasonable method for estimating atomic charges usually gives fairly good straight lines in plots of this sort.[12] Thus the procedure is not very useful for determining the merits of an atomic charge estimation method. Occasionally, however, a plot of this sort can be used to determine the structure or the nature of the bonding of a compound. For example, if a compound has one of two conceivable structures, for which one estimates quite different atomic charges, then a binding energy determination will permit one to distinguish between the alternative structures.[13] Some methods of calculating atomic charge, when applied to molecules with possible contributions to bonding from the use of outer d orbitals, hyperconjugation, or back-bonding, require prior information regarding the extent of such contribution. In such cases the measured core binding energies, when combined with plots such as that in Fig. 2 (using only data for compounds with simple bonding), can be used to estimate the atomic charges and hence the degree of such extra bonding contributions.[4]

ATOMIC CHARGES FROM BINDING ENERGIES

The second main way of using equations 3 and 4 is in the derivation of "experimental" atomic charges from binding energy data. Suppose that we know the binding energies of all the atoms in a set of closely related molecules. We can write an equation (like equation 3 or 4) for each binding energy difference, thus obtaining a set of equations with the atomic charges as unknowns. If the molecules are carefully chosen, or if appropriate further approximations are made, the number of equations will be equal to or greater than the number of unknown atomic charges. Then it is possible to solve the equations to obtain atomic charges which exactly conform to the binding energy shifts or which correspond to a least-squares solution of the equations. We shall discuss several applications of this type.

Consider the binding energies for $Mn_2(CO)_{10}$ and $CH_3Mn(CO)_5$, shown in Table 1.[14] The $Mn_2(CO)_{10}$ molecule is a dimer of an electroneutral $Mn(CO)_5$ group. If we assume that equation 5 is approximately valid in this system, there are certain qualitative conclusions that can be drawn immediately. On going from $Mn_2(CO)_{10}$ to $CH_3Mn(CO)_5$, the manganese, carbon and oxygen binding energies all increase significantly, corresponding to more positive charges on these atoms in $CH_3Mn(CO)_5$ than in $Mn_2(CO)_{10}$. Thus we conclude that the methyl group in $CH_3Mn(CO)_5$ is negatively charged. These binding energies may also be treated quantitatively. The environments of

Table 1. Core Binding Energies of $Mn_2(CO)_{10}$ and $CH_3Mn(CO)_5$

	$Mn_2(CO)_{10}$	$CH_3Mn(CO)_5$
Mn $2p_{3/2}$	647.01	647.30
C 1s(CO)	293.28	293.62
O 1s	539.57	539.91

Table 2. Core Binding Energies of $(\eta^5\text{-}C_5H_5)M(NO)_2Cl$

M	O 1s	N 1s	C 1s	Cl $2p_{3/2}$
Cr	539.45	407.47	291.25	203.38
Mo	538.98	407.35	291.32	203.82
W	538.67	407.23	291.30	204.08

Table 3. Calculated Changes in Atomic Charge in $CpM(NO)_2Cl$, M = Cr, Mo, W.

	Cr → Mo	Cr → W
ΔQ_N	-0.0019	-0.0060
ΔQ_O	-0.016	-0.026
ΔQ_{Cl}	0.022	0.034
ΔQ_M	0.014	0.030

the Mn, C, and O atoms in these compounds are so similar that it is probably a very good approximation to assume that $\Delta E_R = 0$ on going from one compound to the other. Thus we can employ equation 4. In calculating the potentials at the Mn, C, and O atom sites, we will not make a serious error if we assume that the potential due to the neighboring $Mn(CO)_5$ group in $Mn_2(CO)_{10}$ is zero and that the charge of the CH_3 group in $CH_3Mn(CO)_5$ is concentrated at the CH_3 carbon atom. Then we have three equations corresponding to the three binding energy shifts as well as the equation

$$-Q_{CH_3} = \Delta Q_{Mn} + 5\Delta Q_C + 5\Delta Q_O$$

From these we calculate $Q_{CH_3} = -0.137$, $\Delta Q_{Mn} = 0.001$, $\Delta Q_C = 0.020$, and $\Delta Q_O = 0.008$, in agreement with our first qualitative conclusion that the methyl group is negatively charged.

For a second example, consider the binding energies of the complexes $(\eta^5\text{-}C_5H_5)M(NO)_2Cl$ (M = Cr, Mo, W), shown in Table 2.[15] In this series, the carbon binding energy is essentially constant. However, on going from the chromium compound to the tungsten compound, the nitrogen and oxygen binding energies <u>decrease</u> and the chlorine binding energy <u>increases</u>. Apparently, on descending the transition metal family, π-donor bonding to the NO groups increases, and to compensate for the withdrawal of electron density from the metal atom, σ-donor bonding from the chlorine atom increases. Presumably the σ and π parts of the metal-cyclopentadienyl bonding are of comparable importance, and the opposing effects of changes in σ and π bonding cancel, resulting in essentially no change in the charge on the cyclopentadienyl group. Again, by solving four equations like equation 4, we can calculate the changes in the four atomic charges (ΔQ_N, ΔQ_O, ΔQ_{Cl}, and ΔQ_M) on going from the chromium compound to the molybdenum compound or from the chromium compound to the tungsten compound. The results, shown in Table 3, are in agreement with our first qualitative conclusions. It is interesting that the change in charge of the nitrogen atom is much smaller than the change in charge of the oxygen atom. We rationalize this result as follows. On descending the family, σ-donation by the NO group increases because of the large increase in nuclear charge of the metal, and the resultant improved dπ-π* overlap causes an increase in back-bonding. The stronger σ bonding between the nitrogen and metal atom shifts electron density from nitrogen to metal which compensates for the increase in π* electron density due to increased back-bonding. Thus the nitrogen atom charge is almost unchanged although the oxygen atom becomes more negative because of the increased back-bonding.

THE INADEQUACY OF THE SIMPLE ATOMIC CHARGE MODEL

The atomic charges which one can derive from binding energy

data by simultaneous solution of equations like equations 3 or 4 have qualitative or perhaps semi-quantitative significance, but they generally cannot be relied upon to account quantitatively for other physical properties which are sensitive functions of valence electron distribution. It is well known, for example, that a reasonable assignment of point charge atoms cannot account for the dipole moments of molecules with lone pair electrons. Ammonia and nitrogen trifluoride (Figure 3) are the classic examples used to illustrate this fact.[16] Although the N-F bond polarity is at least as great as the N-H bond polarity and although the F-N-F bond angle in NF_3 is more acute than the H-N-H bond angle in NH_3, the dipole moment of NF_3 is much smaller than that of NH_3. Of course this result is due to the partial cancellation of the bond moments by the lone pair moment in NF_3 and the reinforcement of the bond moments by the lone pair moment in NH_3. This same point can be illustrated quantitatively using the binding energy and dipole moment data for the following diatomic molecules: HF, F_2, ClF, Cl_2, HCl. Using the fluorine 1s and chlorine $2p_{3/2}$ binding energies, we can write four equations like equation 3, corresponding to two F 1s binding energy shifts and two chlorine binding energy shifts. The ΔE_R values can be estimated by the transition state method, using CNDO/2 wave functions and the equivalent cores approximation.[9,17] Because there are essentially only three unknown charges (one each for HF, HCl, and ClF), this system of equations is overdetermined and is solved by a least-squares method. The calculated charges are $Q_{HF} = 0.294$, $Q_{HCl} = 0.215$, and $Q_{ClF} = 0.062$, corresponding to a standard deviation of 0.20 eV in the ΔE_B values. Using these atomic charges, and the assumption that the molecules can be represented by simple point dipoles, the dipole moments can be calculated. The calculated

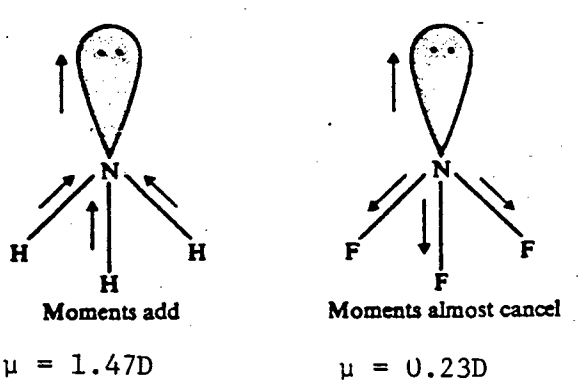

Fig. 3. Explanation of the low dipole moment of NF_3. Arrows indicate the direction from + to −.

and experimental[18] dipole moments are as follows:

	μ_{calc}	μ_{expt}
HF	1.29D	1.83D
HCl	1.31	1.09
ClF	0.49	0.89

Obviously the simple model yields very poor dipole moments; even the relative magnitudes of the HF and HCl moments are incorrectly predicted. Clearly one must allow for the existence of lone pair electrons in order to account for both core binding energy shifts and dipole moments adequately.

A NEW POINT CHARGE MODEL

Benson has suggested that the heats of formation and dipole moments of molecules can be accounted for using a model in which atoms have point charges, are polarizable, and (in the case of atoms with lone pairs) have lone pair dipoles centered on their nuclei.[19] This model, although more realistic than the simple atomic point charge model, does not put any electron density in the bonding regions between the atoms. Scheraga et al.[20] have shown that dipole moments, lattice energies, and rotational barriers of molecules can be fairly well accounted for assuming that molecules consist of point charge atomic cores with bonding electron pair point charges situated between the cores and appropriately positioned nonbonding electron pair point charges. This model is probably unrealistic because it puts too much electron density in the bonding and lone pair regions. We have chosen a model involving point charge atoms in which fractional negative charges are placed at points between the bonded atoms and at points corresponding to lone pair electron density, as indicated in the following structure for methyl fluoride.

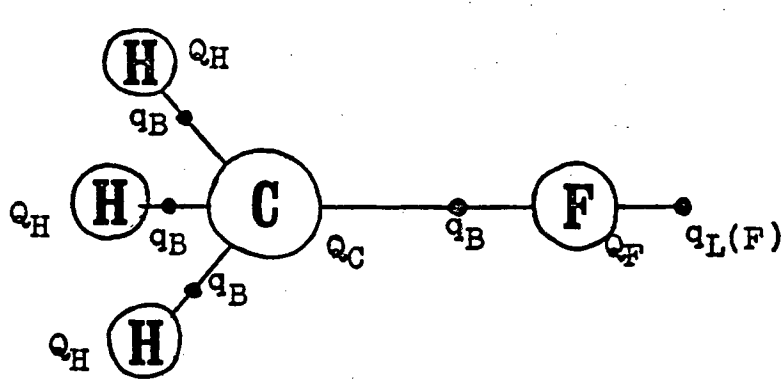

Table 4 lists the molecules which we have analyzed using this

Table 4. Input Data for Calculation of Point Charges

Molecule	Core Binding Energies and Relaxation Energies,[a] eV						Dipole Moment,[b] debye
	C 1s		F 1s		Cl $2p_{3/2}$		
	E_B	E_R	E_B	E_R	E_B	E_R	
CH_4	290.91[c]	16.09					
CH_3F	293.7[d]	16.06	692.92[d]	24.32			1.854
CH_2F_2	296.36[c]	15.99	693.65[d]	24.79			1.978
CHF_3	299.24[e]	15.62	694.62[d]	24.78			1.649
CF_4	301.96[c]	15.47	695.57[c]	24.99			
CH_3Cl	292.48[f]	17.19			206.26[g]	9.56	1.895
CH_2Cl_2	293.9[h]	18.22			206.62[g]	10.16	1.62
$CHCl_3$	295.1[h]	18.79			206.86[g]	10.45	1.04
CCl_4	296.38[i]	19.00			207.04[g]	10.88	
$CClF_3$	300.31[i]	16.68	695.04[i]	25.48	207.83[g]	9.90	0.51
CCl_2F_2	298.93[i]	17.97	694.68[i]	25.02	207.47[g]	10.34	0.50
CCl_3F	297.54[i]	18.68	694.33[i]	26.12	207.20[g]	10.54	0.46
F_2			696.71[j]	25.24			
HF			694.22[c]	21.95			1.827
Cl_2					207.82[g]	9.88	
HCl					207.38[g]	8.38	1.093
ClF			694.54[k]	25.58	209.18[g]	8.81	0.888

For references, see p. 11

Table 4 References

[a] See refs. 9 and 17.
[b] Ref. 18.
[c] Thomas, T. D.; Shaw, Jr., R. W. J. Electron Spectrosc. Relat. Phenom. 1974, 5, 1081.
[d] Davis, D. W.; Shirley, D. A.; Thomas, T. D. in "Electron Spectroscopy," Shirley, D. A., ed., North-Holland Publishing Co., Amsterdam, 1972, p. 707.
[e] Davis, D. W. Ph.D. Thesis, University of California, Berkeley, Lawrence Berkeley Laboratory Report LBL-9900, May 1973.
[f] Perry, W. B.; Jolly, W. L. Inorg. Chem. 1974, 13, 1211.
[g] Aitken, E. J.; Bahl, M. K.; Bomben, K. D.; Gimzewski, J. K.; Nolan, G. S.; Thomas, T. D. J. Am. Chem. Soc. 1980, 102, 4873.
[h] Thomas, T. D. J. Am. Chem. Soc. 1970, 92, 4184.
[i] Holmes, S. A. M.S. Thesis, Oregon State University, Oct. 1974.
[j] Carroll, T. X.; Shaw, Jr., R. W.; Thomas, T. D.; Kindle, C.; Bartlett, N. J. Am. Chem. Soc. 1974, 96, 1989.
[k] Carroll, T. X.; Thomas, T. D. J. Chem. Phys. 1974, 60, 2186.

model, together with the core binding energies and dipole moments for these molecules. There are eleven ΔE_B(C 1s) values, nine ΔE_B(F 1s) values, and nine ΔE_B(Cl $2p_{3/2}$) values for each of which an equation like equation 3 can be written.[21] For each of the twelve dipolar molecules an equation equating the dipole moment to a function of point charges can be written. Thus 41 equations must be solved. To render the equations tractable, we have made certain assumptions and approximations. First, we have used values of ΔE_R estimated by the transition state method using CNDO/2 wave functions.[9,17] The E_R values are listed in Table 4. In the case of the chlorine relaxation energies, it is possible to compare these values with values obtained from Auger parameters;[7] the agreement is fairly good (standard deviation 0.29 eV in the ΔE_R values). Second, we assumed that the "bonding" point charges, q_B, are positioned between atoms such that the ratio of the distances to the two atoms is equal to the ratio of the covalent radii.[22] Third, we assumed that the "lone pair" point charges, q_L, are positioned on the back sides of the halogen atoms at distances equal to the average valence orbital radii, evaluated from Slater exponents.[23] Fourth, we assumed that all the q_B values are equal. Fifth, we assumed that all the q_L values for fluorine are equal, and that all the q_L values for chlorine are equal. Sixth, we assumed that the point charge at a hydrogen, fluorine, or chlorine atom is the same for all compounds in which the atom is directly bonded to the same element. Thus we forced all the fluorine atoms in the substituted methanes to have the same point charge. (Similarly for the hydrogen

and chlorine atoms.) Seventh, in the 29 equations involving ΔE_R values, we used $\langle \frac{1}{r} \rangle$ values calculated from the Slater exponents of the valence shell orbitals. These are, for C, F, and Cl, 22.1, 35.4, and 20.3 eV/charge, respectively. The values are very similar to the corresponding Hartree-Fock-Slater $\langle \frac{1}{r} \rangle$ values.[24]

Noting that the sum of the Q's and q's for each molecule is zero, we find that the 41 equations contain nine adjustable parameters: q_B, $q_L(F)$, $q_L(Cl)$, three Q's for the substituted methanes, and three Q's for the diatomic molecules. A least-squares solution of these 41 linear equations in 9 unknowns yields $q_B = -0.100$, $q_L(F) = -0.252$, $q_L(Cl) = -0.051$, and the various Q values given in Table 5. The ΔE_B values and dipole moments are reproduced by these parameters with a standard deviation of 0.28 eV(debye). In performing the least-squares fit, the binding energies and dipole moments were all weighted equally because the uncertainties (in eV or Debye units) were similar in magnitude. If one wishes to convert the data in Table 5 to numbers corresponding to traditional "atomic charges," we recommend the following procedure: To the Q value for an atom add the corresponding q_L value (if the atom has lone pair electrons) and the atom's share of q_B in each of the bonds to the atom. We propose that q_B be split between the atoms of a bond inversely proportional to the covalent radii of the atoms. Thus one calculates atomic charges of 0.131 for H, 0.112 for C, and -0.081 for F in HCF_3.

As one might expect, the calculated Q and q values are sensitive to the choice of ΔE_R values. If we assume, for example, that all the ΔE_R values are zero (instead of using the estimated values in Table 4), the calculated parameters are quite different from those in Table 5, as shown by the following: $q_B = -0.084$, $q_L(F) = -0.831$, $q_L(CL) = -0.326$, $Q_H(CH_4) = -0.048$, $Q_F(CF_4) = 0.737$, $Q_{Cl}(CCl_4) = 0.249$, $Q_{Cl}(ClF) = 0.418$, $Q_H(HF) = 0.087$, and $Q_H(HCl) = -0.006$. The negative value for $Q_H(HCl)$ is quite unrealistic and shows that it is important to use good ΔE_R values in this method.

If we assume that $q_L(F) = q_L(Cl) = 0$ (that is, if we ignore the lone pairs), the fit of the data is significantly poorer; the standard deviation rises from 0.28 to 0.42 eV(debye). Similarly, if we assume that $q_B = 0$ (that is, if we put no electron density between the atoms), the fit is considerably poorer; the standard deviation becomes 0.53 eV(debye). These results confirm our contention that a point charge molecular model should provide for lone pair and bonding electron density.

If we lift the restriction that Q_H, Q_F and Q_{Cl} are the same for all compounds in which the atom is bonded to the same element, the fit of the data is, of course, improved. For example, if we allow the Q_H values to vary linearly in the series CH_4, CH_3F, CH_2F_2, CHF_3 and CH_4, CH_3Cl, CH_2Cl_2, $CHCl_3$ (and make similar assump-

Table 5. Calculated Q Values for Atoms

Molecule	Q_H	Q_C	Q_F	Q_{Cl}
CH_4	0.203	-0.412		
CH_3F	0.203	-0.185	0.228	
CH_2F_2	0.203	0.042	0.228	
CHF_3	0.203	0.269	0.228	
CF_4		0.496	0.228	
CH_3Cl	0.203	-0.187		0.029
CH_2Cl_2	0.203	0.038		0.029
$CHCl_3$	0.203	0.263		0.029
CCl_4		0.488		0.029
$CClF_3$		0.494	0.228	0.029
CCl_2F_2		0.492	0.228	0.029
CCl_3F		0.490	0.228	0.029
F_2			0.302	
HF	0.299		0.053	
Cl_2				0.101
HCl	0.287			-0.136
ClF			0.286	0.117

tions regarding Q_F and Q_{Cl}), the improvement in the standard deviation (to 0.22 eV(debye)) is just barely statistically significant. However introduction of this extra freedom in the Q_H, Q_F and Q_{Cl} values leads to some unrealistic trends (e.g., $Q_H(HCCl_3) < Q_H(CH_4)$); hence we forced the Q value of an atom to be a constant for all compounds in which it is directly bonded to the same element. It is a typical feature of such least-squares calculations that the introduction of more parameters improves the fit, but makes the magnitudes of the parameters less realistic. A compromise must be made.

ACKNOWLEDGEMENT

This work was supported by the National Science Foundation (Grant CHE-7917976) and the Division of Chemical Sciences, Office of Basic Energy Sciences, U. S. Department of Energy, under Contract No. W-7405-Eng-48. The authors are grateful to Dr. M. B. Hall for a helpful discussion.

REFERENCES

(1) Siegbahn, K. et al. "ESCA Applied to Free Molecules," North-Holland: Amsterdam, 1969.

(2) Brundle, C. R.; Baker, A. D., ed., "Electron Spectroscopy: Theory, Techniques and Applications," Academic Press: London, 1977.

(3) Carlson, T. A. "Photoelectron and Auger Spectroscopy," Plenum: New York, 1975.

(4) Jolly, W. L. Coord. Chem. Rev. 1974, 13, 47; Chapter 3 in ref. 2, p. 119; Topics Curr. Chem. 1977, 71, 149.

(5) Koepke, J. W.; Jolly, W. L.; Bancroft, G. M.; Malmquist, P. A.; Siegbahn, K. Inorg. Chem. 1977, 16, 2659.

(6) Schwartz, M. E.; Switalski, J. D.; Stronski, R. E. in "Electron Spectroscopy," Shirley, D. A., ed., North-Holland: Amsterdam, 1972, p. 605

(7) Aitken, E. J.; Bahl, M. K.; Bomben, K. D.; Gimzewski, J. K.; Nolan, G. S.; Thomas, T. D. J. Am. Chem. Soc. 1980, 102, 4873; Thomas, T. D. J. Electron Spectr. Rel. Phen. 1980, 20, 117.

(8) Perry, W. B.; Jolly, W. L. Chem. Phys. Lett. 1973, 23, 529.

(9) Hedin, L.; Johansson, A. J. Phys. B Ser. 2, 1969, 2, 1336; Jolly, W. L. Discuss. Faraday Soc. 1972, 54, 13; Davis, D. W.; Shirley, D. A. Chem. Phys. Lett. 1972, 15, 185; Davis, D. W.; Shirley, D. A. J. Electron Spectr. Rel. Phen. 1974, 3, 137.

(10) Perry, W. B.; Jolly, W. L. Inorg. Chem. 1974, 13, 1211.

(11) Jolly, W. L., Perry, W. B. Inorg. Chem. 1974, 13, 2686.

(12) Carver, J. C.; Gray, R. C.; Hercules, D. M. J. Am. Chem. Soc. 1974, 96, 6851.

(13) Hendrickson, D. N.; Hollander, J. M.; Jolly, W. L. Inorg. Chem. 1969, 8, 2642.

(14) Avanzino, S. D.; Chen, H.-W.; Donahue, C. J.; Jolly, W. L. Inorg. Chem. 1980, 19, 2201.

(15) Chen, H.-W.; Jolly, W. L.; Xiang; S.-F.; Legzdins, P. Inorg. Chem. 1981, 20, 1779.

(16) Jolly, W. L. "The Principles of Inorganic Chemistry," McGraw-Hill: New York, 1976, p. 47.

(17) We used CNDO/2 wave functions and the relation $E_R = 0.5[V(A)_{val} - V(A^+)_{val}]$ to calculate the relaxation energies.

(18) McClelland, A. L. "Tables of Experimental Dipole Moments," Vols. I and II, Freeman: San Francisco, 1963, 1974.

(19) Benson, S. W. Angew. Chem. Int. Ed. 1978, 17, 812.

(20) Shipman, L. L.; Burgess, A. W.; Scheraga, H. A. Proc. Nat. Acad. Sci. USA 1975, 72, 543; Burgess, A. W.; Shipman, L. L.; Scheraga, H. A. ibid., 1975, 72, 854; Burgess, A. W.; Shipman, L. L.; Nemenoff, R. A.; Scheraga, H. A. J. Am. Chem. Soc. 1976, 98, 23; Scheraga, H. A. Acc. Chem. Res. 1979, 12, 7.

(21) The structural parameters for F_2, HF, Cl_2, HCl, ClF, CH_4, CF_4, and CH_2Cl_2 were obtained from Sutton, L. E., ed. "Tables of Interatomic Distances and Configurations in Molecules and Ions," Chemical Society: London, 1958. For CH_3F and CH_3Cl, Sutton, L. E., ed. "Tables of Interatomic Distances and Configurations in Molecules and Ions, Supplement," Chemical Society: London, 1965. For CH_2F_2, Hirota, E.; Tanaka, T. J. Mol. Spectrosc. 1970, 34, 222. For CHF_3, Cox, A. P.; Kawashima, Y. J. Mol. Spectrosc. 1978, 72, 423. For $CHCl_3$, Jen, M.; Lide, Jr. D. R. J. Chem. Phys. 1962, 36, 2525. For CCl_4, Bartell, L. S.; Brockway, L. O.; Schwendeman, R. H. J. Chem. Phys. 1955, 23, 1854. For CCl_2F_2, Takeo, H.; Matsumura, C. Bull. Chem. Soc. Jpn. 1977, 50, 636. For CCl_3F, Loubser, J. H. N. J. Chem. Phys. 1962, 36, 2808.

(22) Jolly, W. L. "The Principles of Inorganic Chemistry," McGraw-Hill, New York, 1976, p. 36. The covalent radii of H, C, F, and Cl are 0.30, 0.77, 0.58, and 1.00 Å, respectively.

(23) The "lone pair" points for fluorine and chlorine are positioned 0.41 and 0.71 Å from the atoms, respectively.

(24) Lu, C. C.; Carlson, T. A.; Malik, F. B.; Tucker, T. C.; Nestor, C. W. Atomic Data 1971, 3, 1. The $\langle \frac{1}{r} \rangle$ values are: carbon (sp^3 hybridization) 23.0, fluorine (10% s character) 36.7, chlorine (10% s character) 21.7 eV/charge.

This report was done with support from the Department of Energy. Any conclusions or opinions expressed in this report represent solely those of the author(s) and not necessarily those of The Regents of the University of California, the Lawrence Berkeley Laboratory or the Department of Energy.

Reference to a company or product name does not imply approval or recommendation of the product by the University of California or the U.S. Department of Energy to the exclusion of others that may be suitable.

TECHNICAL INFORMATION DEPARTMENT
LAWRENCE BERKELEY LABORATORY
UNIVERSITY OF CALIFORNIA
BERKELEY, CALIFORNIA 94720