94c

LBL-13108

Lawrence Berkeley Laboratory

UNIVERSITY OF CALIFORNIA

ENERGY & ENVIRONMENT DIVISION

Presented at the International Symposium on Electrochemistry in Industry--New Directions, Batteries and Fuel Cells Session, Case Institute of Technology Centennial Celebration, Case Western Reserve University, Cleveland, OH, October 20-22, 1980

BATTERIES OF THE FUTURE FOR VEHICLE APPLICATIONS

Elton J. Cairns

October 1980

RECEIVED
LAWRENCE
BERKELEY LABORATORY

SEP 25 1981

LIBRARY AND
DOCUMENTS SECTION

TWO-WEEK LOAN COPY

This is a Library Circulating Copy which may be borrowed for two weeks. For a personal retention copy, call Tech. Info. Division, Ext. 6782

LBL-13108 c.2

Prepared for the U.S. Department of Energy under Contract W-7405-ENG-48

DISCLAIMER

This document was prepared as an account of work sponsored by the United States Government. While this document is believed to contain correct information, neither the United States Government nor any agency thereof, nor the Regents of the University of California, nor any of their employees, makes any warranty, express or implied, or assumes any legal responsibility for the accuracy, completeness, or usefulness of any information, apparatus, product, or process disclosed, or represents that its use would not infringe privately owned rights. Reference herein to any specific commercial product, process, or service by its trade name, trademark, manufacturer, or otherwise, does not necessarily constitute or imply its endorsement, recommendation, or favoring by the United States Government or any agency thereof, or the Regents of the University of California. The views and opinions of authors expressed herein do not necessarily state or reflect those of the United States Government or any agency thereof or the Regents of the University of California.

LBL-13108

BATTERIES OF THE FUTURE FOR VEHICLE APPLICATIONS

Elton J. Cairns
Lawrence Berkeley Laboratory, and
University of California
Berkeley, California 94720

presented at

International Symposium on
Electrochemistry in Industry--New Directions
Batteries and Fuel Cells Session
Case Institute of Technology Centennial Celebration
Case Western Reserve University
Cleveland, Ohio

October 20-22, 1980

This work was supported by the U.S. Department of Energy
under Contract W-7405-ENG-48.

BATTERIES OF THE FUTURE FOR VEHICLE APPLICATIONS

Elton J. Cairns

University of California, and
Lawrence Berkeley Laboratory
Berkeley, California 94720

I. INTRODUCTION

In consonance with the theme of this centennial symposium, it is appropriate to consider how electrochemistry in the automotive industry can make important future contributions to energy independence and a cleaner environment. Electric vehicles powered by rechargeable batteries offer the opportunity to shift a portion of the transportation energy demand away from petroleum, and toward other energy sources such as coal, nuclear, and hydroelectric. The importance of this opportunity can be understood by examination of Figure 1, (1) which is an energy flow diagram of the U.S. energy economy. Note that the transportation sector consumes an amount of oil equal to the total U.S. production (and more than all of the imports*). A reduction in the petroleum consumption by the transportation sector would allow a corresponding reduction in oil imports. This could be achieved by the use of electrical energy for at least part of our transportation. Note (Figure 1) that only a small fraction of the U.S.'s electrical energy is produced from oil.

The largest single segment of the oil consumption in the transportation sector is that of automobiles (about 55%). Therefore the largest impact with regard to shifting the petroleum demand can be made by the development of electric automobiles (rather than vans, trucks, etc.) that are attractive in the marketplace. It is well known (and will be clear from the discussion below) that the major impediment to the development of electric vehicles is the lack of batteries which have adequate

*Actual imports have been less than shown in Figure 1.

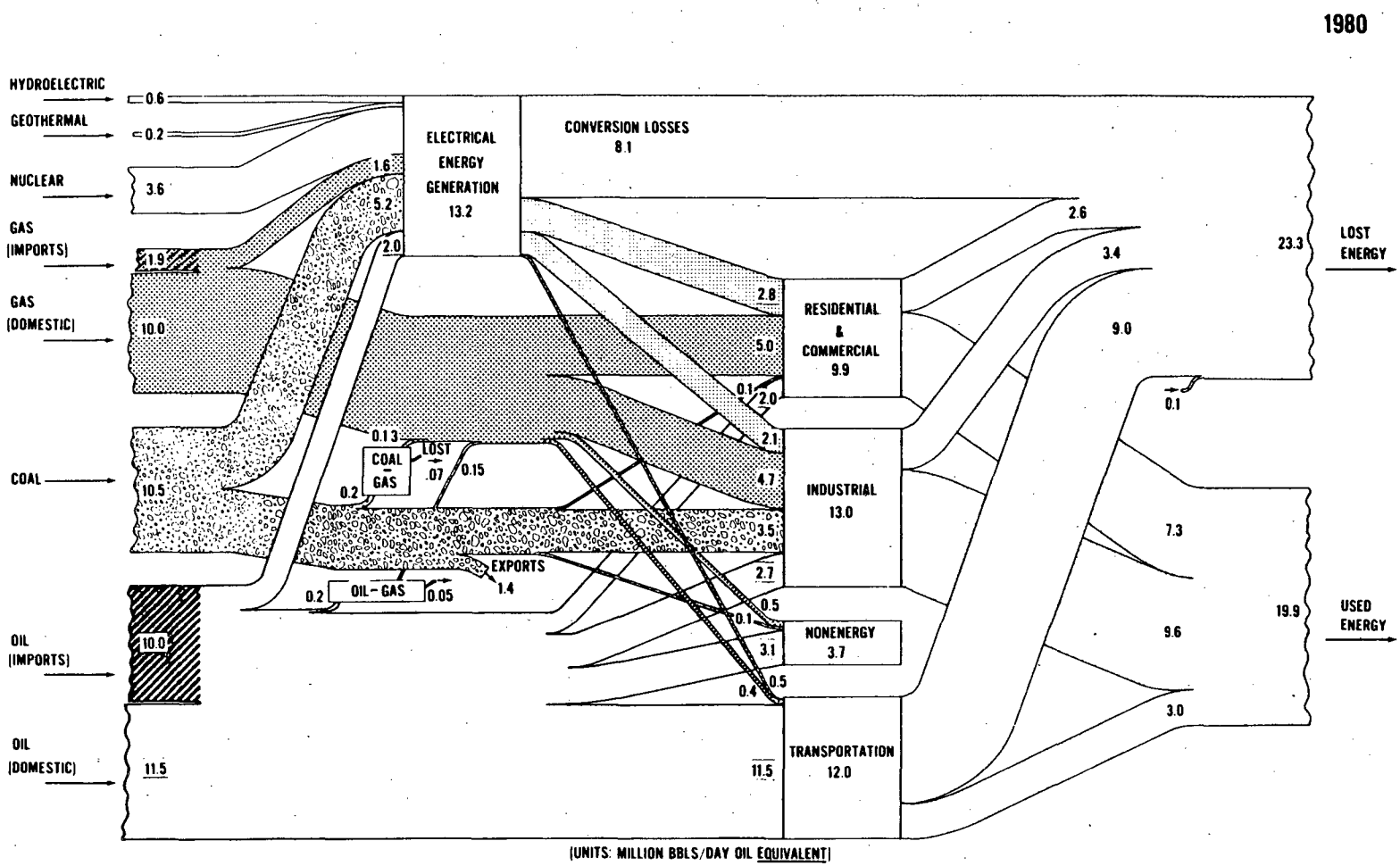

XBL 817-10590

Figure 1. Diagram of the energy economy of the U.S., projected to 1980. The units are expressed in millions of barrels of oil equivalent per day. (1 barrel of oil = 5.8 X 10^6 BTU)

performance (specific power and specific energy), durability, and cost. The main performance limitation has been inadequate specific energy (Wh/kg), proportional to vehicle driving range between recharges. Because of this, it is most appropriate to consider urban and suburban electric automobiles, rather than general purpose (including cross-country) electric automobiles. An urban electric automobile is shown in Figure 2. The gasoline version of this vehicle weighs about 1 tonne (1000 kg); electric versions weigh somewhat more, depending on the type of battery.

In addition to shifting the transportation energy demand somewhat away from petroleum, there is also the opportunity to increase the overall energy efficiency of automobiles. The energy efficiency for a spark-ignition automobile vs. that of an electric automobile, starting with coal as the primary fuel is shown in Figure 3. There is an efficiency ratio of about 1.7, favoring the electric automobile, even with the optimistic assumption of synfuel production at 70% efficiency. This efficiency advantage can be realized only if the mass of the electric vehicle is not so great as to counterbalance it. Of course, the relative effectiveness of energy use is the product of the efficiency ratio and the mass ratio of the vehicles.

A final advantage of electric vehicles is that of minimal air pollution. The pollutants are not released at the vehicle, but at

Figure 2. Photo of General Motors Electrovette, an urban electric automobile.

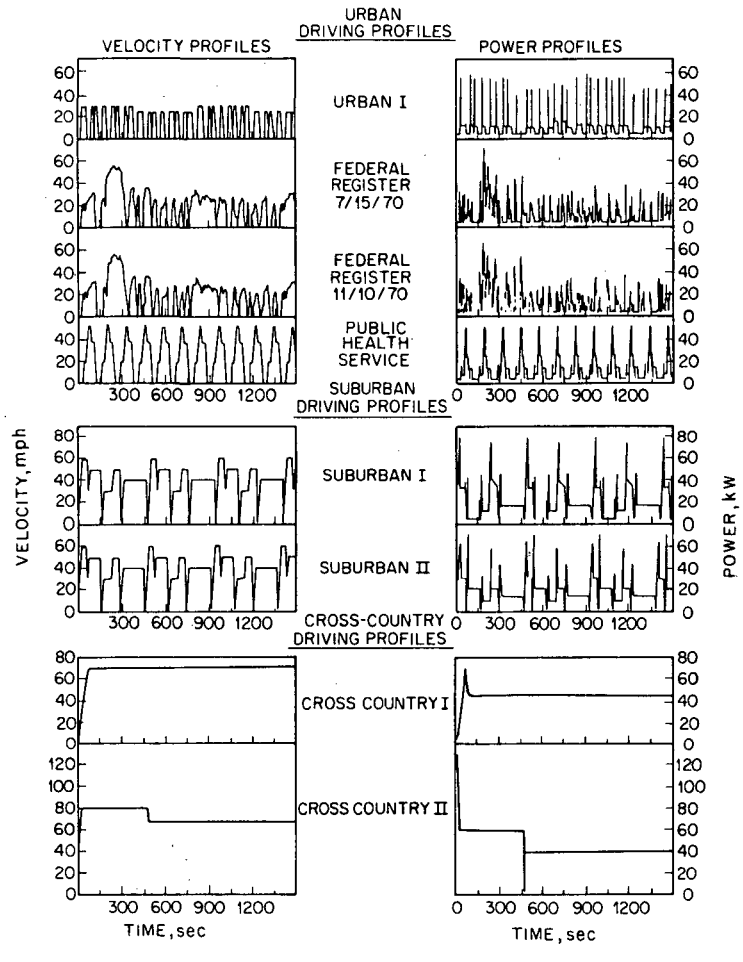

Figure 4. Sample driving profiles and corresponding power profiles (for a 1700 kg automobile). (3)

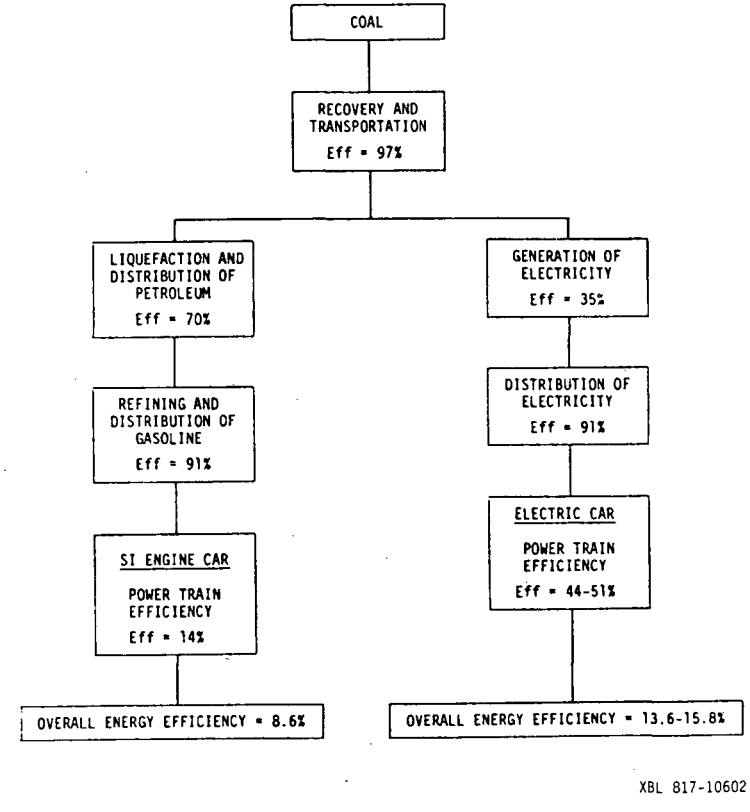

Figure 3. Efficiency comparison for the use of coal as a synfuel in a spark-ignition engine automobile and for an electric automobile.

the power plant where they are more amenable to effective monitoring and control.

II. POWER AND ENERGY REQUIREMENTS FOR ELECTRIC VEHICLES

In order to devise appropriate batteries for electric vehicles, it is necessary to know the power and energy requirements of the vehicle. These can be computed in a straightforward manner from the equations of motion of the vehicle, and typical driving profiles (velocity vs. time). The equations of motion are: (2,3)

$$P_b = \frac{P_r}{E_m \cdot E_e} + \frac{P_a}{E_{ae}} \tag{1}$$

$$P_r = V(F_r + F_w + F_g + F_a) \tag{2}$$

$$F_r = M_v g K \ (1 + 0.022 \ V) \tag{3}$$

$$F_w = \rho_a C_d A_f \frac{V^2}{2} \tag{4}$$

$$F_g = M_v g \sin \Theta \tag{5}$$

$$F_a = 1.1 \ M_v \frac{dV}{dt} \tag{6}$$

where P_b = power required from the battery, watts

P_r = power required at the rear wheels, watts

E_m = mechanical efficiency of the drive train (transmission, differential)

E_e = electrical efficiency of the drive train (power electronics, motor)

P_a = power required for the work of the accessories

E_{ae} = efficiency of the accessories

V = vehicle velocity, meters/second

F_r = rolling resistance of the tires, newtons

M_v = vehicle test mass, kg

g = gravitational constant, 9.807 meters/second^2

K = coefficient of rolling resistance for the tires (0.008-0.015)

F_w = wind resistance, newtons

ρ_a = density of air, kg/m^3

C_d = air drag coefficient for the vehicle, 0.3-0.7, depending on streamlining

A_f = frontal area of the vehicle, m^2

F_g = gravitational force, newtons

Θ = angle of inclination of road

F_a = acceleration force, newtons.

Several driving profiles are presented in Figure 4. (3) These were used in conjunction with Equations 1-6 to yield the power profiles shown in Figure 4 for a vehicle mass of about 1700 kg. (3) It has been found that the energy consumption per unit distance, per unit vehicle mass is not very sensitive to the details of the driving profile, so that the results of the many computations can be summarized in the simple form of Table I. (4) A convenient set of numbers for battery design use is an energy consumption of 0.15 kWh/T•km, or 0.15 Wh/kg•km, and a power of 35 kW/T for acceleration.

For good vehicle design, a maximum of 30% of the vehicle mass may be assigned to the battery. (2) This allows an estimate of the vehicle range to be made, if the specific energy of the battery is known. Conversely, for a desired vehicle range, the required specific energy of the battery can be calculated:

$$R = \frac{S_pE \times f_b}{0.15}$$

where R = vehicle range under urban driving conditions, km

S_pE = specific energy of the battery, Wh/kg

f_b = fraction of the vehicle test mass assigned to battery.

Table I. Energy and Power Requirements for Urban Electric Vehicle

Energy Consumption*	
At Axle	0.10-0.12 kW•h/T•km
From Battery	0.14-0.17 kW•h/T•km
From Plug	0.18-0.23 kW•h/T•km
Peak Power Required (0 to 50 km/h, ≤ 10 s)	
At Axle	25 kW/T (Test Wt.)
From Battery	35 kW/T (Test Wt.)

Average Power Required

	At Axle	From Battery
Urban Driving (Avg. 32 km/h)	3-3.5 kW/T	4-5 kW/T
50 km/h Cruise	3-3.5 kW/T	4-5 kW/T

*These energy consumption figures correspond to urban driving profiles such as the Federal Register driving profile, and represent an average speed of about 32 km/h.

For a vehicle range of 150 km, and $f_b = 0.3$, the specific energy of the battery must be 75 Wh/kg. Any battery with a lower specific energy cannot achieve a 150 km range in a well-designed electric vehicle. This is the major problem for battery development. No currently-available rechargeable batteries have a specific energy of 75 Wh/kg or more, as will be seen below.

III. ADVANCED BATTERIES FOR ELECTRIC VEHICLES

During the last decade, there has been an increasing interest in the development of batteries having performance characteristics attractive for electric vehicle use. The first characteristic viewed as important has been the specific energy. Raising the specific energy of a battery requires the use of reactants with greater (negative) free energies of reaction, and lower equivalent weights. Some of the candidate reactants are compatible with ordinary aqueous electrolytes, but others, such as the alkali metals, require the use of nonaqueous electrolytes such as molten salts, at elevated temperatures. First, the cells using aqueous electrolytes will be discussed, then those with nonaqueous electrolytes at high temperatures. To place the recent developments in perspective, it is useful to review the status of the only type of electric vehicle battery that is commercially available now. Table II summarizes the situation for the Pb/PbO_2

Table II.

$$Pb + PbO_2 + 2H_2SO_4 \rightarrow 2PbSO_4 + 2H_2O$$
$$E = 2.095\ V;\ 175\ W{\cdot}h/kg\ Theoretical$$

Status

Specific Energy	22-40 W•h/kg @ 10 W/kg
Specific Power	50-100 W/kg @ 10 W•h/kg
Cycle Life	300+ @ 10 W/kg, 60% DOD
Cost	$50-100/kW•h

Recent Work

- Replace Sb with Ca in positive current collector
- Maintenance-free cells
- Use $4PbO{\cdot}PbSO_4$ instead of $PbO + Pb_3O_4$ in positives
- Low-resistance current collectors
- Circulating electrolyte

Problems

- Sealing of cells
- Positive current collector corrosion
- Cohesion and adhesion of PbO_2
- High internal resistance
- Heavy

system. Notice that the highest specific energy achieved by a Pb/PbO_2 module of any significant cycle life is 40 Wh/kg, or 23% of the theoretical value (175 Wh/kg). Recent work to achieve this value has included special computer-designed low-resistance current collectors, and provision for circulating the electrolyte to promote rapid mass transport of electrolyte to the reaction sites. A well-designed electric automobile can be expected to have an urban driving range of 80 km with a 40 Wh/kg Pb/PbO_2 battery.

A modern version of the old Edison cell (Fe/KOH/NiOOH) has been under development recently, and shows higher specific energy than the Pb/PbO_2 cell, as might be expected on the basis of the theoretical specific energies (267 vs. 175 Wh/kg). Table III shows the status of this system. Full-sized vehicle batteries are under test, and show the expected levels of performance. An urban range of 100 km should be available. Lower-cost Fe and NiOOH electrodes are being developed. One continuing set of problems with this system is the low efficiency (60+%) and resultant high heat generation rate, caused by excessive gas evolution primarily H_2 at the Fe electrode during recharge. This means that a sealed, maintenance-free system is not feasible, and frequent electrolyte maintenance is required.

Table III.

$$Fe + 2NiOOH + 2H_2O \rightarrow Fe(OH)_2 + 2Ni(OH)_2$$
$$E = 1.370\ V;\ 267\ W{\cdot}h/kg\ Theoretical$$

Status

Specific Energy	40-50 W•h/kg @ 10 W/kg
Specific Power	50-100 W/kg @ 10 W•h/kg
Cycle Life	300-500 @ 10-25 W/kg, 80% DOD
Cost	>$100/kW•h

Recent Work

Improved Fe and NiOOH electrodes
200-300 Ah cells and modules
Vehicle-size batteries

Problems

H_2 evolution during recharge; can't be sealed
Heat evolution
Low efficiency ∿60%
Capacity loss at low temperature

Another alkaline-electrolyte cell under development is the zinc/nickel oxide cell (Zn/KOH/NiOOH), which has a theoretical specific energy high enough to permit a 75 Wh/kg cell to be developed, for a vehicle range of 150 km. Cells currently available in small quantities have specific energies of 60-75 Wh/kg. Batteries of these cells have been tested in electric vehicles, and have yielded the expected doubling of the range with Pb/PbO_2 batteries. (2) Although Zn/NiOOH cells have some very attractive features (high specific energy, high efficiency, capability of being sealed), they have a cycle life of 100-200 deep cycles, compared to a minimum goal of 300 deep cycles (100% depth of discharge). The cycle life is limited by the behavior of the combination of the zinc electrode and the separator. The zinc electrode suffers from problems of 1) dendrite formation during recharge, causing cell shorting, 2) zinc redistribution during cycling, 3) densification during cycling, and 4) passivation during discharge. Any combination of these four problems can cause cell failure. Improvements in the zinc electrode have been a popular subject of research, but progress has been relatively modest. There have been some improvements in separators for the zinc electrode, so that dendrite problems are no longer the main cause of cell failure.

Significant cost reduction of zinc/nickel oxide cells will be necessary to allow use in electric vehicles. Polymer-bonded electrodes are being developed as one cost-reduction measure. The

status of this system is shown in Table IV, and a photo of a vehicle-size battery is shown in Figure 5.

The zinc/chlorine ($Zn/ZnCl_2/Cl_2$) system has been under development for several years for possible use in stationary and electric vehicle applications. This system uses readily-available materials, mostly carbon and polymers. The negative electrode is zinc deposited on a dense carbon substrate. The chlorine is stored outside the cell stack in a refrigerated storage area, in the form $C\ell_2 \cdot 8H_2O$, which is a yellow, ice-like solid. Chlorine is supplied to the porous carbon positive electrodes via circulating warm aqueous $ZnC\ell_2$ electrolyte, which melts and dissolves the $C\ell_2 \cdot 8H_2O$, as shown in the schematic diagram, Figure 6. This system is rather complex, but has been demonstrated in sizes up to 50 kWh, some of them as electric vehicle power plants.

The theoretical specific energy for the $Zn/C\ell_2 \cdot 8H_2O$ cell is 405 Wh/kg, offering a possibility of a practical specific energy approaching 100 Wh/kg. Specific energy values close to 70 Wh/kg have been demonstrated. A 1.7 kWh system has yielded a cycle life of about 1400 cycles, with periodic electrolyte maintenance. Because of the fact that the zinc electrode potential is a few tenths of a volt below the reversible potential of the hydrogen electrode, there is a strong tendency for hydrogen evolution, and low concentrations of transition metal (e.g. Fe, Co, Ni)

Table IV.

$$Zn + 2NiOOH + H_2O \rightarrow ZnO + 2Ni(OH)_2$$

E = 1.735 V; 326 W•h/kg Theoretical

Status

Specific Energy	60-75 W•h/kg @ 30 W/kg
Specific Power	100-150 W/kg @ 35 W•h/kg
Cycle Life	100-200 @ 25-50 W/kg, 80% DOD
Cost	>$100/kW•h

Recent Work

- Inorganic separators (e.g. ZrO_2, $Ni(OH)_2$, $Ce(OH)_3$, others)
- Microporous organic separators
- Sealed cells
- Nonsintered electrodes
- 400 Ah cells and modules

Problems

- Sealing of cells - O_2 evolution and recombination
- Zn redistribution
- Separators

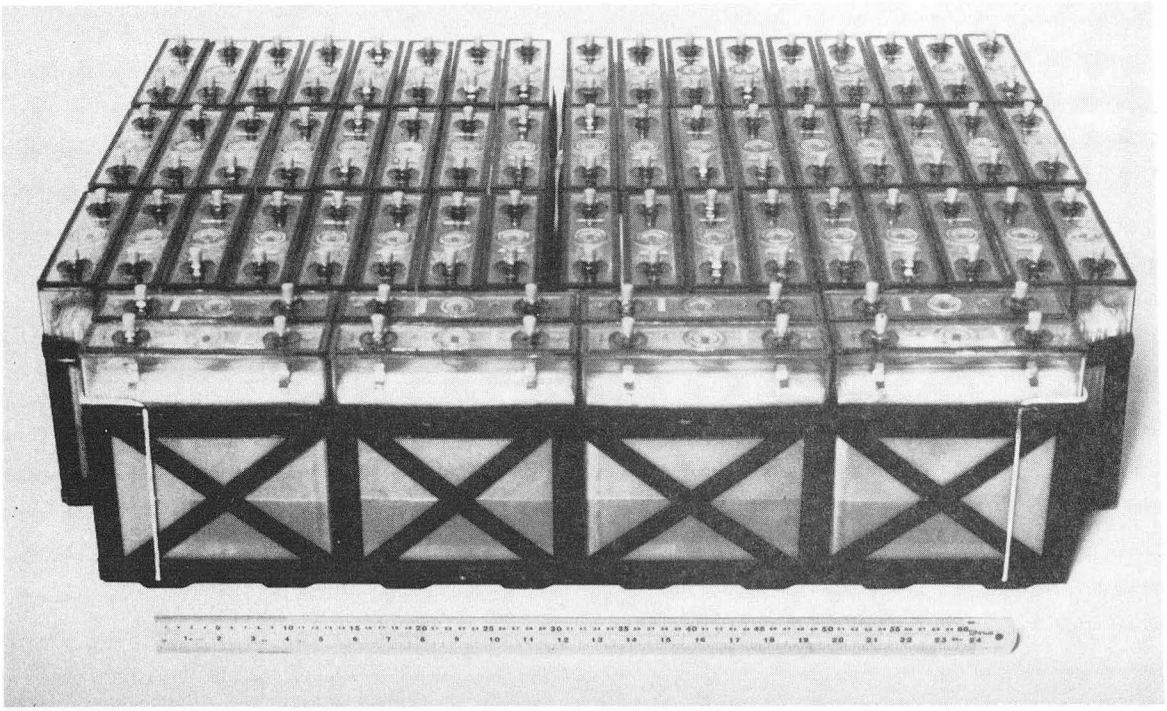

Figure 5. Photo of a zinc/nickel oxide battery for an electric automobile.

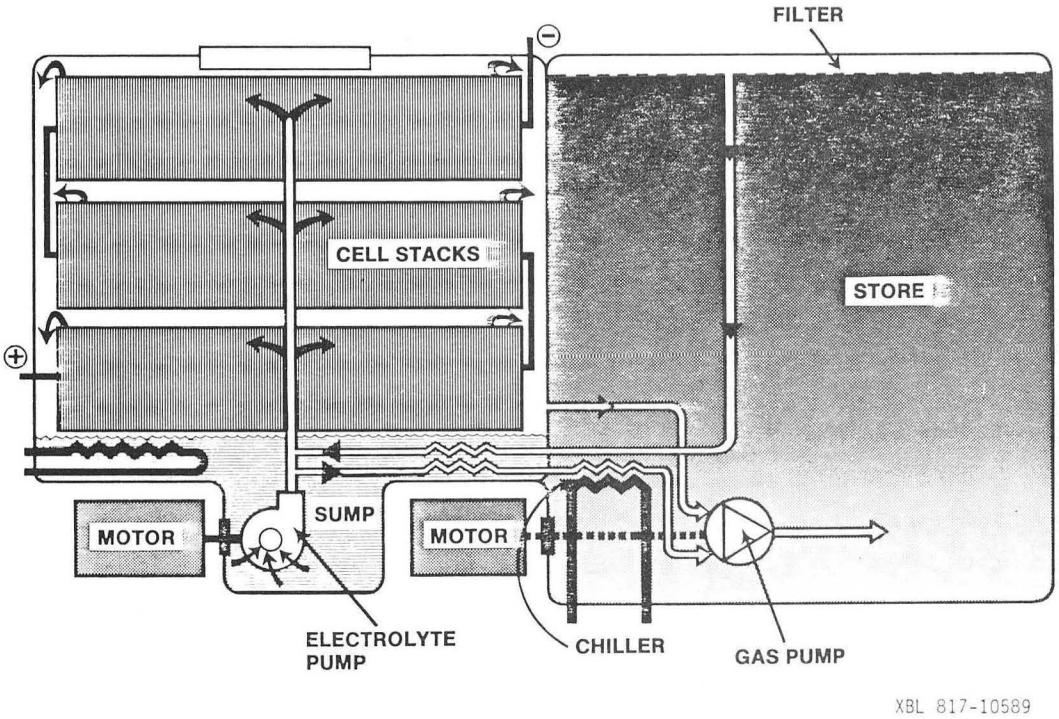

Figure 6. Diagram of the zinc/chlorine system.

impurities in the electrolyte can cause spontaneous hydrogen evolution at the zinc electrode, resulting in a safety hazard, and a loss of efficiency.

Continuing work on the $Zn/C\ell_2 \cdot 8H_2O$ system has included provision for recombination of hydrogen with chlorine, and additives to control the morphology of the zinc deposit. The zinc deposit morphology is important because zinc protrusions or dendrites can cause cell shorting. This is avoided by completely discharging all of the zinc every several cycles, and then carefully redepositing it in the presence of morphology-control additives.

A number of 50 kWh modules of $Zn/C\ell_2 \cdot 8H_2O$ cells will be assembled to form at least 1 MWh of energy storage capability for test on a utility network in the BEST (Battery Energy Storage Test) facility in the near future. A summary of the status of this system is presented in Table V.

None of the systems with aqueous electrolyte discussed above shows promise of yielding a specific energy above 100 Wh/kg. A

Table V.

$$Zn + C\ell_2 \cdot 8H_2O \rightarrow ZnC\ell_2 + 8H_2O$$

E = 2.12 V; 405 W•h/kg Theoretical

Status

Specific Energy	66+ W•h/kg @ 3-4 W/kg
Specific Power	70 W/kg for seconds
Cycle Life	1400*
Cost	>$100/kW•h

Recent Work

- Additives for Zn deposition
- Recombination of H_2 and $C\ell_2$
- 35-50 kWh systems
- Systems components

Problems

- Complete discharge required
- Bulky
- Complex
- Low specific power
- Very sensitive to impurities
- Low efficiency
- Gaskets

*1 kWh system only, with electrolyte maintenance

number of high-temperature systems with nonaqueous electrolytes do offer this possibility. The list of possibilities includes: (5)

$$LiA\ell/LiC\ell\text{-}KC\ell/FeS$$
$$Li_4Si/LiC\ell\text{-}KC\ell/FeS_2$$
$$Ca_2Si/LiC\ell\text{-}NaC\ell\text{-}CaC\ell_2\text{-}BaC\ell_2/FeS_2$$
$$Na/Na_2O{\cdot}xA\ell_2O_3/S$$
$$Na/Na^+ \text{ glass}/S$$
$$Na/Na_2O{\cdot}xA\ell_2O_3/SC\ell_3A\ell C\ell_4 \text{ in } A\ell C\ell_3\text{-}NaC\ell$$

Space limitations do not permit a discussion of all of these, so only the more well-developed cells will be presented below.

The LiAℓ/FeS cell operates at 450°C, and makes use of a LiCℓ-KCℓ molten-salt electrolyte. Work on this system is an outgrowth of earlier work on the Li/LiCℓ-KCℓ/S cell, which offered a theoretical specific energy of 2600 Wh/kg. Difficulties with the containment and control of liquid Li and liquid S led to the use of solid LiAℓ and solid FeS as the reactants, but at a significant sacrifice of cell voltage (2.3 vs. 1.3 V) and theoretical specific energy (2600 vs. 458 Wh/kg). An essential increase in cell stability and lifetime was obtained, however.

A diagram of a typical LiAℓ/FeS cell is shown in Figure 7. The electrodes are prepared by pressing mixtures of powdered reactant and powdered electrolyte together to form plaques, which are assembled in contact with current collectors, and enclosed by fine-porosity particle retainer sheets. The separator between the electrodes is boron nitride felt. The pores in the felt and in the electrodes are filled with molten salt electrolyte, and the cell is sealed. These cells typically operate at 450°C, and have a voltage plateau of 1.1-1.2 V under current drain.

The status of the LiAℓ/FeS cell is presented in Table VI. Specific energy values for 320 Ah multi-electrode cells are near 100 Wh/kg; cycle lives for cells with lower specific energies are in excess of 300 deep cycles, with 500-800 cycles being not uncommon, corresponding to lifetimes of over 5000 hr.

Recent work on the LiAℓ/FeS cell has included the evaluation of MgO powder separators as a replacement for the more expensive BN felt separators, thermal cycling of individual cells as many as 30 times with no loss of capacity, improved, lower resistance current collectors (for higher specific power), and the testing of 10-cell batteries of 320 Ah cells (3.8 kWh). The issues continuing to receive attention include cell shorting caused by swelling and extrusion of the active materials from the electrodes, agglomeration of LiAℓ during cycling, feedthrough development, corrosion-resistant materials, especially for the current collectors, and thermal control of batteries. Thermal control is

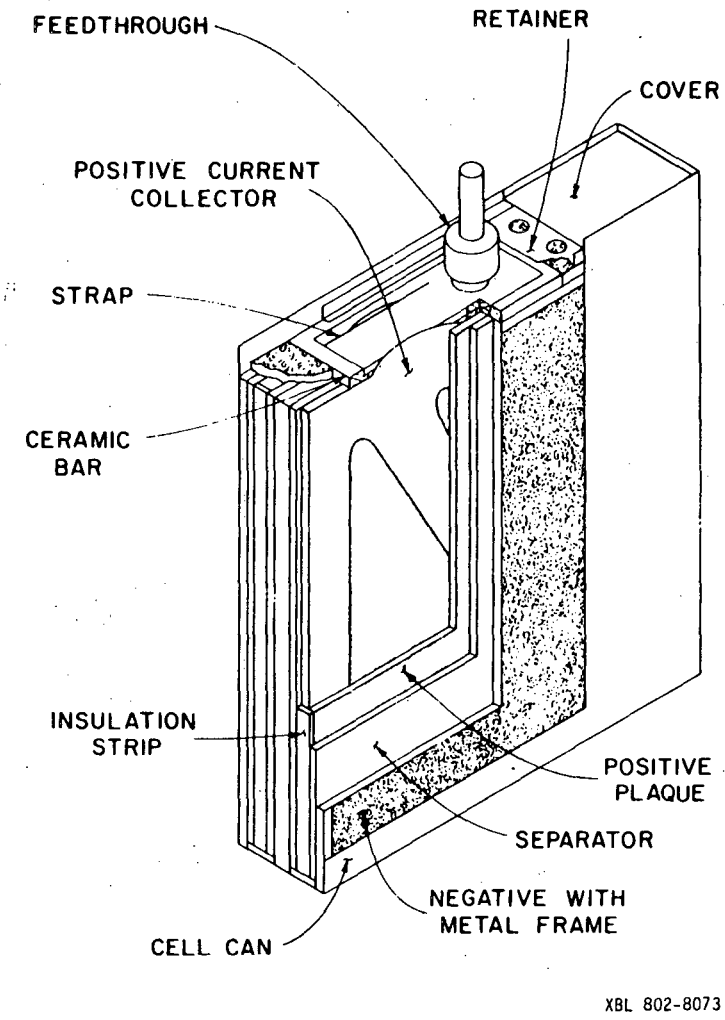

Figure 7. Cutaway drawing of a $LiA\ell/FeS_2$ cell.

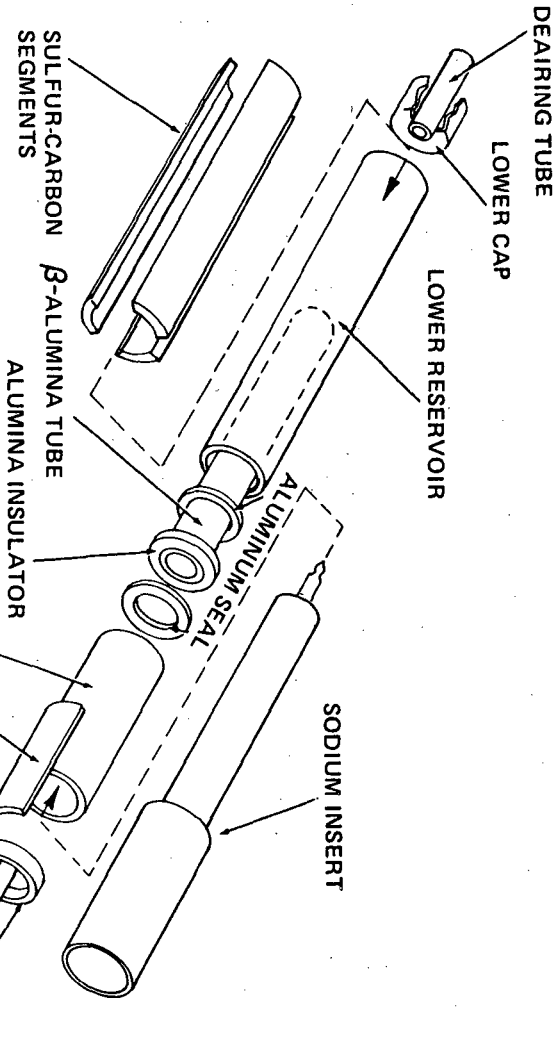

Figure 8. Exploded view of a Na/S cell.

Table VI.

$LiA\ell/LiC\ell\text{-}KC\ell/FeS$

$2LiA\ell + FeS \rightarrow Li_2S + Fe + 2A\ell$

E = 1.33 V; 458 Wh/kg Theoretical

T = 450°C

Status

Specific Energy	60-100 Wh/kg @ 30 W/kg
Specific Power	60-100 W/kg, peak
Cycle Life	300+ @ 100% DOD
Lifetime	5000+ h
Cost	>$100/kWh

Recent Work

- LiX-rich electrolyte
- Wetting agent for BN separators
- Powder separators-MgO
- Batteries of 320 Ah cells
- Improved current collectors
- Thermal cycling

Problems

- Low specific energy
- Low voltage per cell
- Cell shorting major failure mode
- Electrode swelling and extrusion
- Agglomeration of Li-Aℓ with cycling
- Capacity loss
- High separator cost
- Leak-free feedthroughs
- Thermal control

important in vehicle batteries because the thermal losses through the insulation must be balanced against the heat generated by the use of the battery, in order to maximize the battery efficiency. High-performance, thin insulation materials are under development for this application.

A higher specific energy can be obtained by use of lower equivalent-weight reactants. The $Li_4Si/LiC\ell\text{-}KC\ell/FeS_2$ cell has a theoretical specific energy of 944 Wh/kg, offering the opportunity for a practical specific energy of about 200 Wh/kg, which should give an urban range of up to 400 km. Laboratory cells of this type have already demonstrated specific energies of 180 Wh/kg at low specific powers, cycle lives of 700 cycles, and lifetimes of about 2 years. (6) These cells are still in the laboratory stage of development, and have not yet reached a practical configuration for electric vehicle use. Some effort has been devoted to the

operation of small bipolar cell stacks. The problems needing additional work include corrosion-resistant current collectors for the FeS_2 electrode (graphite and molybdenum are used now), low-cost separators (BN felt is now used), solubility of sulfur-bearing species in the electrolyte, leak-free feedthroughs, and thermal control. Table VII shows the status of this system.

An alternative to the approach of using solid reactants and a liquid electrolyte, is to use a solid electrolyte with liquid reactants. The most well-known system of this type is the sodium/sulfur cell with a solid electrolyte of $Na_2O \cdot 11A\ell_2O_3$ (beta alumina). This cell makes use of the electrolyte in the form of a closed-end tube, with one reactant on the outside, and the other on the inside. One version of this cell is shown in Figure 8, where the sulfur is held around the outside of the electrolyte tube in a graphite fiber matrix which serves as a current collector, and the sodium is on the inside of the electrolyte tube. Thermocompression bonded seals are used to close the cell. An operating temperature of 350°C is used, where the electrolyte has an acceptable resistivity of about 5 ohm-cm (for the β" alumina modification, containing Li_2O and MgO additives), and the reactants and some of the products are molten.

Table VII.

$Li_4Si/LiC\ell\text{-}KC\ell/FeS_2$

$Li_4Si + FeS_2 \rightarrow 2Li_2S + Fe + Si$

E = 1.8, 1.3 V; 944 Wh/kg Theoretical

Status

Specific Energy	120 Wh/kg @ 30 W/kg
	180 Wh/kg @ 7.5 W/kg
Specific Power	100 W/kg, peak
Cycle Life	700 @ 100% DOD
Lifetime	∿15,000 h
Cost	>$100/kWh

Recent Work

- Bipolar cells
- Li-Si electrodes
- BN felt separators
- 70 Ah cells

Problems

- Materials for FeS_2 current collector
- Leak-free feedthroughs
- High internal resistance
- Low-cost separators needed
- Thermal control

Various versions of the sodium/sulfur cell have been investigated in laboratories located in several countries. The performances and lifetimes of the cells have been highly variable. The ceramic electrolyte has been difficult to produce with sufficiently well controlled properties that cell lifetimes are reproducible. Various electrolyte fabrication methods have been investigated, as have alternative solid electrolytes such as Nasicon ($Na_{1+x}Zr_2Si_xP_{3-x}O_{12}$), (5) and sodium borate glasses (5) (in the form of thin, hollow fibers).

As might be expected, the corrosiveness of the sulfur has been a major issue, and many materials have been investigated as possible current collector and container materials, or as coatings. The most corrosion-resistant materials have been graphite and molybdenum; some stainless steels and coated metals have also been used. Mass transport problems in the sulfur electrode have been ameliorated by the use of specially shaped graphite fiber current collectors, tailored-resistance graphite current collectors, and additives to the sulfur. At present, it is possible to achieve close to 150 Wh/kg, a cycle life of a few hundred to almost 2000 cycles, and a lifetime of up to two years with single Na/S cells. Several batteries of about 10 kWh have been tested, but these have had short times between failure of cells (hundreds of hours). Thermal cycling remains an important issue: freezing of cells usually causes failure.

Development of the Na/S cell continues with stationary energy storage being a main goal, and vehicle propulsion batteries being a secondary goal. Utility energy storage modules of about 1 MWh capability may be tested within the next few years. The status of the Na/S cell is summarized in Table VIII.

Other high-temperature cells are under investigation, but are at earlier stages of development than those presented here. For a discussion of some of the other systems, see Reference 5.

Some perspective can be gained with regard to the relative projected capabilities of the various batteries discussed above by examining Figure 9. The specific energy values above 100 Wh/kg are limited to the high-temperature systems, and these high specific energies are accompanied by the necessity of having a thermal control system for the battery. There are other candidate electrochemical systems which might be of interest for electric vehicles, including metal/air cells, and fuel cells. These are reviewed in Reference 2.

Table VIII.

Na/Na+ Solid/S

$2Na + 3S \rightarrow Na_2S_3$

$\bar{E}$ = 2.0 V; 758 Wh/kg Theoretical

Status

Specific Energy	85-140 Wh/kg @ 30 W/kg
Specific Power	60-130 W/kg peak
Cycle Life	200-1500
Lifetime	3000-15,000 h
Cost	>$100/kWh

Recent Work

- Batteries, ∿10 kWh
- C_6N_4 additive to S
- Ceramic (TiO_2) electronic conductors
- Shaped current collectors
- Tailored resistance current collectors
- Sulfur-core cells
- $Na_{1+x}Zr_2Si_xP_{3-x}O_{12}$
- Thermocompression bonded seals

Problems

- Corrosion-resistant material for contact with S
- Low cost seals
- Low cost electrolyte
- Specific power is low
- Thermal cycling

IV. CONCLUSIONS AND FUTURE DIRECTIONS

Consideration of the material presented above, and its implications leads to the following conclusions and indications of appropriate future activities.

1. Electric vehicles will probably be produced in significantly larger numbers in the next few years, especially utility vehicles and vans with improved Pb/PbO_2 batteries.

2. The next generation of electric vehicle battery will probably be an alkaline system - Fe/KOH/NiOOH, or Zn/KOH/NiOOH. The zinc/nickel oxide system has the advantage of higher specific energy, and capability of being sealed. The zinc electrode requires a longer cycle life before it can be commercially attractive for EV's (at least 300 cycles, 100% depth of discharge).

3. The LiAℓ/FeS cell is very robust, and may offer some attractive features for electric vehicles, but its specific energy

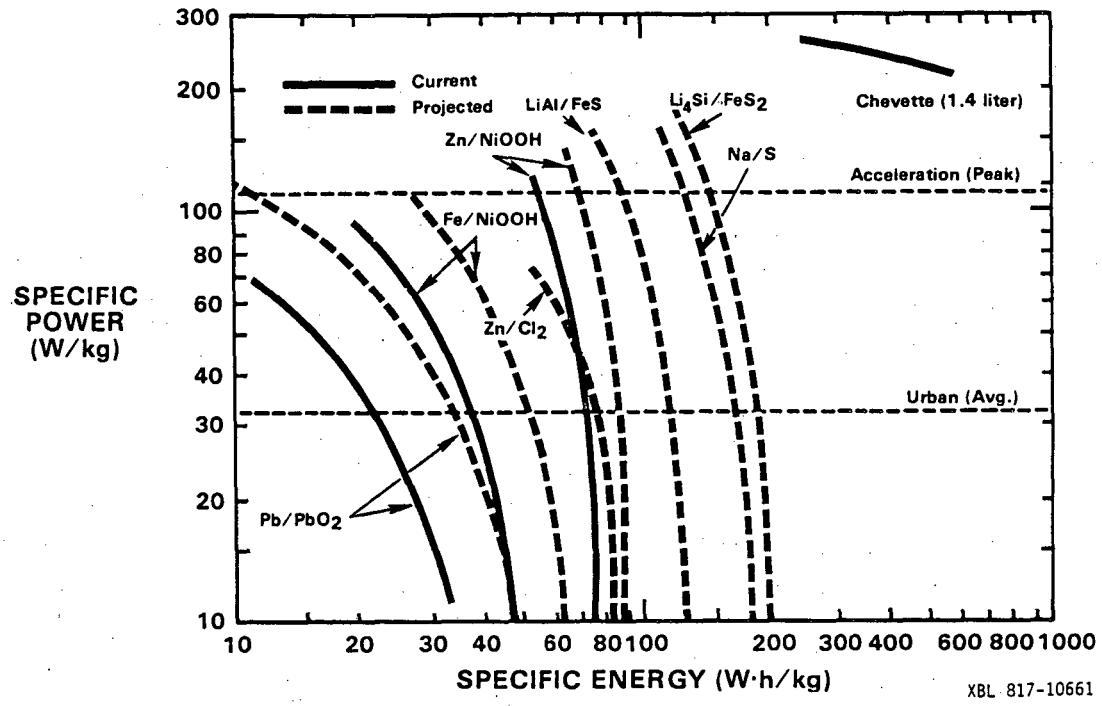

Figure 9. Specific power vs. specific energy plot for various batteries.

of 100 Wh/kg is probably borderline for a high-temperature system.

4. The Li_4Si/FeS_2 cell offers a very high performance, but the materials problems need more work before a practical battery can be produced.

5. The Na/S cell family with solid electrolytes could prove suitable for some mobile applications, but the thermal cycling problem and materials problems need solutions.

6. Systems involving flowing reactants (such as $Zn/C\ell_2$, Zn/Br_2, metal/air, fuel cells) are farther from practical applications in electric vehicles than the other systems discussed, because they tend to be bulky and complex. Fuel cells have not been evaluated in realistic vehicle environments, so dynamic response remains a question, along with cost and lifetime.

7. Future directions for batteries of even higher performance include a Li/S cell, which may require a solid, lithium-ion conducting electrolyte, stable to lithium and sulfur. Failing a Li/S cell, lower equivalent-weight reactants than Li_4Si and FeS_2 are attractive research topics.

8. Ambient-temperature, non-aqueous rechargeable cells with lithium negative electrodes offer the possibility of high specific energy without the inconvenience of high-temperature operation.

9. Rechargeable oxygen electrodes of low overvoltage, and low cost could significantly change the outlook for metal/air cells and fuel cells.

10. Low-cost, long-lived alkaline fuel cells may be attractive power plants for electric vehicles, using cracked ammonia as fuel. This should be evaluated.

REFERENCES

1. A.L. Austin, B. Rubin, and G.C. Werth, Lawrence Livermore Laboratory Report UCRL 51221, May 30, 1972.
2. Elton J. Cairns and Earl H. Hietbrink, "Electrochemical Power for Transportation," in Comprehensive Treatise of Electrochemistry, Volume 3, J.O'M. Bockris, B.E. Conway, E. Yeager, and R.E. White, eds., Plenum, New York, 1981, p. 421.
3. M.L. Kyle, H. Shimotake, R.K. Steunenberg, F.J. Martino, R. Rubischko, and E.J. Cairns, in Proceedings of the 1971 IECEC, Society of Automotive Engineers, Inc., New York, 1971, p. 80.
4. E.J. Cairns and J. McBreen, in Industrial Research, June, 1975, p. 56.
5. Elton J. Cairns, "Secondary Batteries--New Batteries: High Temperature," in Comprehensive Treatise of Electrochemistry, Volume 3, J.O'M. Bockris, B.E. Conway, E. Yeager, and R.E. White, eds., Plenum, New York, 1981, p. 341.
6. E.J. Zeitner and J.S. Dunning, in Proceedings of the 13th IECEC, Society of Automotive Engineers, Inc., Warrendale, PA, 1978, p. 697.

This work was supported by the U.S. Department of Energy under Contract W-7405-ENG-48.

This report was done with support from the Department of Energy. Any conclusions or opinions expressed in this report represent solely those of the author(s) and not necessarily those of The Regents of the University of California, the Lawrence Berkeley Laboratory or the Department of Energy.

Reference to a company or product name does not imply approval or recommendation of the product by the University of California or the U.S. Department of Energy to the exclusion of others that may be suitable.

TECHNICAL INFORMATION DEPARTMENT
LAWRENCE BERKELEY LABORATORY
UNIVERSITY OF CALIFORNIA
BERKELEY, CALIFORNIA 94720