LBL-13165
Preprint

Lawrence Berkeley Laboratory
UNIVERSITY OF CALIFORNIA

EARTH SCIENCES DIVISION

Submitted to the Bulletin of the Seismological Society of America

OCT 9 1981

ASP: AN AUTOMATED SEISMIC PROCESSOR FOR MICROEARTHQUAKE NETWORKS

T.V. McEvilly and E.L. Majer

August 1981

TWO-WEEK LOAN COPY

This is a Library Circulating Copy which may be borrowed for two weeks. For a personal retention copy, call Tech. Info. Division, Ext. 6782.

LBL-13165 c.2

Prepared for the U.S. Department of Energy under Contract W-7405-ENG-48

DISCLAIMER

This document was prepared as an account of work sponsored by the United States Government. While this document is believed to contain correct information, neither the United States Government nor any agency thereof, nor the Regents of the University of California, nor any of their employees, makes any warranty, express or implied, or assumes any legal responsibility for the accuracy, completeness, or usefulness of any information, apparatus, product, or process disclosed, or represents that its use would not infringe privately owned rights. Reference herein to any specific commercial product, process, or service by its trade name, trademark, manufacturer, or otherwise, does not necessarily constitute or imply its endorsement, recommendation, or favoring by the United States Government or any agency thereof, or the Regents of the University of California. The views and opinions of authors expressed herein do not necessarily state or reflect those of the United States Government or any agency thereof or the Regents of the University of California.

ASP: An Automated Seismic Processor for Microearthquake Networks

T.V. McEvilly

Seismographic Station

Department of Geology and Geophysics

and

E.L. Majer

Earth Sciences Division

Lawrence Berkeley Laboratory

University of California

Berkeley, CA 94720

LBL Rept. No. *13165*

This work was suported by the Assistant Secretary for Conservation and Renewable Energy, Office of Renewable Technology, Division of Geothermal and Hydropower Technologies, and by the Assistant Secretary for Nuclear Energy, Office of Nuclear Waste Isolation, U.S. Department of Energy under contract #W-7405-ENG-48.

ABSTRACT

ASP, a low-power, in-field Automated Seismic Processor of microearthquake network data has been designed, fabricated, and deployed for initial operation in four different field areas to monitor seismicity associated with two geothermal areas (The Geysers, California, and Cerro Prieto, Mexico), a nuclear explosion with its related collapse and aftershock sequence, and late (>1 year) activity in a major aftershock series (Livermore, California). A second ASP system, with a high-speed front-end, is used in acoustic emission (1-20 kHz) analysis for fracture monitoring. Each of the 15 channels of ASP (configured for up to 128 channels) automatically detects, measures times and amplitudes, and computes and fits FFT's for both the P and S waves on data sampled at 100 samples/sec. These data from each channel are then processed with a central microprocessor for hypocenter location, running b-values, source parameters, event count, and P-wave polarities. The system is capable of processing a 15-station detection in approximately 40 seconds, excluding print-out. The initial trials have demonstrated that in-field real-time analysis of data maximizes the efficiency of microearthquake surveys allowing flexibility in experimental procedures, with a minimum of the traditional labor-intensive post-processing. Current efforts are directed towards improving efficiency of computation and data output and in expanding software capabilities.

I. INTRODUCTION

For several years scientists at the University of California at Berkeley (UCB) and the associated Lawrence Berkeley Laboratory (LBL) have been involved in a research program to evaluate and develop seismological techniques for the exploration and delineation of geothermal reservoirs. It has been necessary in this effort to develop equipment as well as field procedures and theoretically based methods of analysis. From field investigations in Nevada (Majer, 1978), at The Geysers (Majer and McEvilly, 1979), and in the Cerro Prieto geothermal region (Majer *et al*, 1980), it has become apparent that effective study of the relation between seismicity and geothermal reservoir dynamics requires more than conventional data reduction techniques. The concept of an Automated Seismic Processor (ASP) was seen to offer the necessary rapid and cost-effective approach to microearthquake monitoring and analysis in applications to geothermal exploration and reservoir delineation. The impetus for the development of ASP was the need to simplify routine microearthquake data acquisition and reduction in such investigations. Ideally, ASP would be a low-power, in-field data acquisition and real-time analysis system with adequate computational speed, bandwidth (0-100 hz) and dynamic range (16 bit). The system would also be multi-channel (up to 128), with the ability to operate unattended in hostile environments for long periods of time. Other automated systems are primarily laboratory-based systems compatible with larger computer facilities and peripheral devices (see Stewart, 1977; Allen and Ellis, 1980).

Our experience in microearthquake work has led to a conviction that it is possible to define and automate the associated routine time-consuming data reduction and processing tasks. For each data channel or station these include the detection and identification of valid events, time and amplitude measurements of the P- and S-waves, calculation of the Fourier transforms on properly windowed P- and S-waves, and the reduction of the P and S spectra to long period level, corner frequency and high frequency slope. P-wave first motion polarity with a quality grade is also required. Given these data from a number of channels the event would be located, with source parameters determined from the spectral information and the polarity data.

An updated b-value would be obtained for the sequence, along with statistics on the occurrence of events as a function of average S-P times. Although other automated systems had demonstrated many of these capabilities, such real-time analysis had not yet been achieved with a low-power field-based system. Our most radical departure from previous work, however, is the philosophy that the original time series need not be saved. We are convinced that proper data reduction and judicious selection of output will provide virtually all results of interest in conventional microearthquake surveys. Based on these concepts, ASP has been designed and built for routine microearthquake studies, with sufficient data analysis to provide critical earthquake parameters, in a trade-off with computing speed and capacity.

ASP was conceived as the low-power CMOS microprocessor technology revolution was just beginning. At the time, the 8-bit CMOS RCA 1802 device was the only microprocessor that met our requirements. As a feasibility exercise, a two-channel prototype system using the 1802 was completed successfully in the fall of 1978. A 16-channel ASP was built the following year, in a joint hardware/software development program. While several system circuit boards are RCA products, many are not "off the shelf", and were designed and built in-house. Approximately 4 man-years were required for the development, fabrication, and initial testing of the first 16-channel ASP. Hardware cost is about $2500 per channel. ASP in its field-ready state is shown in Figure 1.

II. SOFTWARE

ASP is designed as a parallel processing device with a dedicated CMOS microcomputer monitoring each incoming channel of data. Each dedicated-channel microcomputer, or WORKER, feeds processed data to a central microcomputer, or BOSS, which controls the network and performs multi-station data analysis. Figure 2 shows the modular architecture of the system. A total of 127 WORKERS can be handled by a single BOSS.

A. WORKER Routines

The principal function of each WORKER is to monitor the incoming time series of a data channel. The sequence of operations in the present system is: (1) the time series $X(t_i)$ is digitized at 100 samples/sec with 12 bit resolution, (2) the mean is removed from the time series, (3) a new time series $X'(t_i)$ is formed by

$$X'(t_i) = \frac{\sum^{n} X(t_i)}{n},$$

with n = previous 16 or 32 points, (4) a long term average (LTA) of 4096 points and a short term average (STA) of 16 points is taken on $X'(t_i)$, (5) if the STA exceeds the LTA by a specified constant, i.e.,if STA $\geqslant C_1$*LTA, then a "trigger" point is found, if not, the WORKER waits for a new digitization point and the sequence starts over again. At any one time, 512 points of the original demeaned time series plus the STA and LTA values are saved. Since a trigger point will always be later than the true arrival time, the last time at which the STA exceeded the LTA of $X'(t_i)$ by another constant, C_2, is taken as the P-wave arrival time PT. Because C_2 is always less than C_1, PT will always precede the P-trigger time by a variable amount, depending upon the impulsiveness of the triggering signal.

Shown in Figure 3 are examples of the triggering and the picking process for an impulsive and emergent event. Of the four vertical lines shown on each $X'(t_i)$, the first two are the P-wave pick and the P-trigger point, respectively, while the second two vertical lines show the S-wave time and S-wave trigger point. Although similar to the P-wave algorithms, the S-wave detection is slightly different. After a P-time is found, the next 64 points of $X'(t_i)$ are averaged to form a new LTA (called the P-amplitude, or PA). When the STA of $X'(t_i)$ exceeds PA by a specified amount, i.e., if STA $\geqslant C_3$*PA, then S-trigger is declared. From this point, a line is extrapolated back along $X'(t_i)$ with a slope calculated by using the midpoint of the preceding four points and the midpoint of the four points preceding these four points. The S-time arrival, ST, is the time at which this line intersects the level C_4*PA. The default values of C_1, C_2, C_3, and C_4 are; 4, 1.5, 2 and 1.5, respectively. At this stage both P and S-waves are timed, and the

P amplitude has been measured. Next, the average values of the 128 $X'(t_i)$ points following the S-time give the S-amplitude, SA. Estimates of P- and S-wave quality, PQ and SQ, are calculated as PQ = PA/LTA, SQ = SA/LTA, where LTA is the last 4096 point LTA before the P-trigger.

The polarity of the P-wave is found by comparing the sum (S_1) of the 4 data points preceding the P-time, and the sum (S_2) of the four data points following the P-time of the original demeaned data. The sign of PP = $(S_2 - S_1)/|S_1|$ is the first motion polarity (+ = up, - = down). The magnitude of PP is the quality of the polarity estimate.

Variable length windows for FFT computations are then placed around the P- and S-waves. Available window lengths are 64, 128, and 256 points for the P-wave and 128, 256, and 512 points for the S-wave, selected automatically for S-P times, of 0-1, 1-2, and greater than 2 seconds, respectively. If no S-wave is found a 128 point window is used for the P-wave. Demeaned data are held in these windows for subsequent spectral analysis.

Fast Fourier transforms are calculated for the windowed P- and S-waves using an algorithm from Brigham (1976). Ten and twenty-five percent cosine tapers are applied to the front and back of the data windows, respectively. The computed spectra are corrected for instrument response and fit for long period level, corner frequency and high frequency slope. The amplitude response of a γ-pole low pass Butterworth filter,

$$A = \frac{Ao}{[1 + (f/f_o)^{2\gamma}]^{1/2}},$$

is fit to a spectrum for best long-period level, PLP or SLP, the slope γ as PGI or SGI, and corner frequency, f_o as PFO or SFO. As constraints, $1 \leqslant \gamma \leqslant 5$, and f_o must not lie in the first or last five spectral values.

For each event there are thus 14 possible calculated values which can be sent by a WORKER to BOSS: PT, PA, PQ, ST, SA, SQ, DT, PP, and the spectral parameters PL, GI, and FO for both P and S.

A WORKER can be aborted at certain times in its calculation if the BOSS routine deter-

mines that too few stations recorded the event during a specified time window or that the time between the first and last P times was too small, i.e., a noise spike on the system. Upon abortion, the WORKER returns to the detection mode if its signal level has remained below the trigger level for 256 consecutive samples, and if BOSS is not busy.

An event is determined to be over when the signal level remains below the P-trigger threshold for 256 samples. This can occur even without an S-wave detection. If the level remains above the trigger threshold for six minutes a new LTA is calculated and the WORKER resets itself and resumes looking for another event.

All WORKERS will remain in HOLD while BOSS is calculating. While in HOLD the WORKERS can complete their sequence of calculation but cannot resume the detection mode until released by BOSS. This allows the BOSS to complete its calculations, output the results, and prepare to accept a new set of event data from the WORKERS. The total time for all WORKER operations for a typical microearthquake with S-P time less than 3 seconds is 10 to 20 seconds depending upon FFT lengths. Figure 4 summarizes the WORKER calculations and shows two examples.

In the system architecture each WORKER is capable of addressing 64K bytes of memory. Each WORKER as presently configured, however, contains only 12K of PROM and 4K of RAM, for a 16K memory size. Also, only 12-bit analog-to-digital converters were readily available in CMOS at the time of design, although 16-bit arithmetic is used throughout ASP. Integer arithmetic only is used throughout WORKER software, with division and multiplication in powers of 2 wherever possible. The FFT speed of 3 seconds for 512 points is achieved by using a hardware multiplier board, designed and built in-house, with table look-up for sine and cosine values.

Although the individual WORKER calculations are fairly routine steps, the overall concept of discarding the original time series after a certain amount of on-line processing is not a usual practice. We were confident that we could specify the operating parameters for the computations just described such that, for routine microearthquake network analysis, all results of

interest would be output directly or could be reconstructed from the output, and at least 90% of the usable events would be processed. Extensive testing, using synthetic and real data, was carried out to gain confidence in the software. Data of varying quality were processed "ASP-style" and by conventional techniques and then compared to develop the optimal algorithms. Only after thousands of events were run was enough confidence obtained to accept the resulting software. In general, the ASP worked as well or better than an experienced analyst in picking the P-wave arrival, and almost equally well in S-wave picking. Moreover, the subjective human factor that can be somewhat inconsistent is eliminated.

B. BOSS Routines

BOSS as the name implies, is responsible for overall system operation, event discrimination, and for the final calculations. To maintain overall system management on the message bus the BOSS has the highest priority (priority of 0), while each WORKER is assigned a specific priority (e.g., 1-15) to insure smooth handling of messages.

Upon event detection, each WORKER sends PT, PA, and PQ. BOSS stores these data and begins counting. If a minimum number (NMIN) of these "P-messages" are received within a specified time window (TW), BOSS will wait until 2*TW to collect additional P-messages and until 3*TW to collect additional S-messages (ST, SA, SQ, DT). After 3*TW all incoming P- or S-messages are ignored. FFT and P-wave polarity data, however, are accepted until 2*TW plus 20 seconds. NMIN and TW will vary depending upon the array size, the number of earthquakes occurring, noise background, and the velocity model. Default values of NMIN and TW are 1 station and 2 seconds, respectively. NMIN is usually set to about 5 for a 12 to 15 station array.

After 3*TW plus 20 seconds BOSS begins calculating, depending upon the modes of calculation the user has specified, selected from: (A) DEBUG, (B) EVENT COUNT, (C) B-VALUE, (D) LOCATION, (E) POLARITY, (F) FFT RAW DATA, (G) FFT STATION DATA, and (H) AVERAGE FFT DATA. The modes operate as follows:

(A) DEBUG Mode

DEBUG prints out all data received from the WORKERS in the specified time windows. Shown in Figure 5 is a typical output from an event recorded on four stations. For each event judged valid the word "EVENT" is printed with a time identification. The sequence of messages from a WORKER is P-message (PT, PA, PQ); S-message (ST, SA, SQ, DT); F-message (PFFT parameters PSL, PLP in floating point format $PLP*2^{PEX}$, and PGI, PGF as integer and fraction, PGI.PGF); G message (FFT information for the S-wave); Q message (polarity PP as sign and quality). All numbers are input and output as mantissa and exponent, i.e., the number 46789 would be 46789 + 05.

(B) EVENT COUNT

Mode B lists the number of events from turn-on or reinitialization that have met the occurrence criteria (NMIN stations in TW seconds, and maximum PT difference greater than MINPTDF). An optional printout, illustrated in Figure 5, can be selected to list the average S-P time for the event (DTAV), average P- and S-wave amplitudes, (PAAV and SAAV), the station with the earliest P-time (PT1), and the number of events up to that time that have had average S-P times between 0-1 seconds (NDTO), 1-2 seconds (NDT1), 2-3 seconds (NDT2), and greater than 3 seconds (NDT3).

(C) RUNNING b-VALUES

This mode calculates the maximum likelihood b-value after NBT events. Using the amplitudes PAAV and SAAV, according to:

$$\frac{\log e}{\frac{\sum^{NBT} \ln PAAV}{NBT} - \ln PAAV_o}$$

where $PAAV_0$ is the minimum amplitude in the set of NBT values of PAAV. Both cumulative (BPC or BSC) and interval (BP or BS) b-values are calculated. To obtain an accurate estimate of the b-value it is necessary to place a lower limit on

acceptable $PAAV_0$ (or $SAAV_0$), insuring uniform detection and use of the "linear" portion of the distribution curve.

(D) LOCATION

Because calculation time and memory space are at a premium, a simple location program was incorporated. The method is a noniterative constant velocity computation used widely in acoustic emission work and described by Inglada (1928). The equations, distance=velocity*time for a given station i,

$$(X_i - X_o)^2 + (Y_i - Y_o)^2 + (Z_i - Z_o)^2 = V^2 (t_i - t_o)^2 \tag{1}$$

are linearized by subtracting successive station equation pairs, i.e., for the first two stations:

$$(X_2 - X_1)\ X_o + (Y_2 - Y_1)\ Y_o + (Z_2 - Z_1)\ Z_o - V^2 (t_2 - t_1)\ t_o = \frac{V^2 (t_1^2 - t_2{}^2) + X_2{}^2 + Y_2{}^2 + Z_2{}^2 - X_1{}^2 - Y_1{}^2 - Z_1{}^2}{2} \tag{2}$$

For n recording stations one is left with n-1 equations in the 4 hypocenter unknowns, X_0, Y_0, Z_0 and T_0. The resulting system of equations is of the form

$$Cx = B \tag{3}$$

which can be solved directly by

$$C^T Cx = C^T B \tag{4}$$

with Gaussian elimination on the resulting 4 x 4 set of equations. We have found the method to work best on real data when the equations are ordered according to arrival time. This is apparently due to error correlation between equations, i.e., equations with similar arrival times tend to have similar errors, thus subtracting these equations tends to cancel the errors. While either P- or S-wave velocity can be used in each station equation, the P or S equations cannot be subtracted from one another to form the Cx = B set of equations. P-time equations and S-time equations are formed independently to give an overall matrix of $(n_p\text{-}1 + n_s\text{-}1) \times 4$ matrix (n_p = number of stations with P-times, n_S = number of stations with S-times).

Because the resolution in depth is poorer than that in X and Y for a surface array of stations, Z_0 is excluded from the solution and found by using

$$Z_o = \frac{\left[\sum_i V^2(T_i - T_o)^2 - \sum_i (X_i - X_o)^2 - \sum_i (Y_i - Y_o)^2\right]^{1/2}}{n} \qquad (5)$$

There are two operating versions for location, one for a three-dimensional array and another for a two-dimensional array of stations. The 3-D array includes Z_0 in the matrix solution.

After the event has been located the hypocentral distance, azimuth (clockwise from north), take-off angle, and P- and S-time residuals are calculated for each station.

(E) POLARITY

The polarity determined for each P-wave at each WORKER is printed out, + = up, - = down, with the magnitude being a measure of the quality of the event.

(F) FFT RAW DATA

The spectral values of corner frequency, long period level and slope are output as Hertz, micron-seconds, and integer-plus-fraction, respectively.

(G) FFT STATION DATA

Using the spectral parameters for P and S and the location for each station source parameters are calculated following Brune (1970, 1971):

$$M_0 = 4\pi R\rho V^3 \Omega_0$$

$$r = 2.34\ V/2\pi f_0$$

$$\Delta\sigma = 7M_0/16r$$

$$u = M_0/\pi\rho V^2$$

where

r = hypocentral distance

ρ = density = 2.67g/cc

V = velocity

Ω_o = long period spectral level

f_o = corner frequency

M_o = moment

r = fault radius

$\Delta\sigma$ = stress drop

u = fault slip

(H) AVERAGE FFT DATA

Averaged values of moment, radius, stress drop, displacement, and slope are obtained for each event.

Any or all of the above modes can be selected and computed in any order so long as location parameters have been computed prior to their use in a subsequent mode. In practice DEBUG is not used routinely, due to the time and paper required to print out the extensive data. Because we have replaced the RCA floating point software with a much faster Advanced Microdevices 9511A arithmetic processor chip, the processing time between events is less than 45 seconds when all 15 stations record the event. When a 9600 baud output device (e.g., cassette) is used the total time between events is just less than a minute.

WORKER and BOSS program structures are shown in Figure 6. The routines SYSTEM, MISC, and SINTP are service programs that handle the initialization of the CPU, the basic interrupts, and the calls and returns between BOSS and WORKER computers. These routines also handle BOSS messages, printing of output, input processing, and the manipulation of data. "WORKER" and "BOSS" are the main computer programs from which all calls to the different subroutines are made. ICALC in WORKER handles the ADC interrupt routines that sample the data, remove the mean, form the LTA and STA, check for trigger, and time the P-wave arrival, i.e., all operations between samples. The rest of the WORKER functions are non-interrupt, carried out in WCALC, FFT and FIT.

FLOAT handles the fixed point to floating point conversion in BOSS. FPA is the RCA package which also interfaces the RCA arithmetic with the Advanced Microdevices 9511

floating point operations. The RCA number range is from $\pm$ 3.5 x 10^{-39} to $\pm$ 1.7 x 10^{37}. The 9511A number range is from $\pm$ 2.7 x 10^{-20} to $\pm$ 9.2 x 10^{18}. Because of this difference, FPA must make provisions for an overflow or underflow occurrence. The mode calculations described earlier are done in BCONE and BCTWO.

III. HARDWARE

ASP utilizes the 8-bit CMOS RCA 1802 microprocessor, a byte-oriented central processing unit employing the COSMAC architecture. Double precision arithmetic is used throughout ASP to achieve 16-bit resolution. The overall system configuration is shown in Figure 2.

Each WORKER uses 10 different types of circuit boards, 6 designed and fabricated in-house, the rest are RCA products. The boards are: (1) CPU Board (RCA), (2) Address Latch and Bank Select (RCA), (3) I/O Decode (RCA), (4) 4K CMOS RAM (RCA), (5) Analog-to-Digital Converter, (6) Bus Interface 1, (7) Bus Interface 2, (8) PROM board, (9) 16 x 16 Multiplier, and (10) the Status Display board. With 3 PROM boards in each WORKER (12K), there is a total of 12 boards per WORKER.

The CPU board contains the 1802 microprocessor, modified for manual reset and to provide a strobe pulse for proper PROM operation. The Address Latch and Bank Select card enables each 4K of memory. The I/O Decode allows the RCA two-level input/output to operate seven I/O ports each with 7 I/O lines. The RAM provides for temporary storage of constants.

The Analog-to-Digital Converter board uses a 12-bit CMOS Datel unit (ADC-HC12B) with a Datel (SHM-LM-2) sample-and-hold unit. It operates at 100 samples/sec with a full scale input of $\pm$ 5 volts, for a 2.5 mv least significant bit.

The Bus Interface boards handle the 16-bit data bus, 7-bit source address bus, 7-bit destination code, 16-bit time code, the CPU clock, the ADC sample command, and the T time latch, distributing the time code and the individual messages to each computer (source, bus request, and destination). Each Bus Interface board is connected via flat cable to a interconnect

panel through which the bus messages are distributed.

Each PROM board houses 4K of memory using CMOS Intersil IM 6654 IJG UV erasable PROMS (512 x 8) with an access time of 280 nanoseconds. The Multiplier board is the only non-CMOS board in WORKER. Based on the Advanced Microdevices 25LS14 with a 25LS22 shift register, it performs a 16 x 16 bit fixed-point multiply in 30 microseconds, and is powered up on demand.

The Status Display board controls a bank of LEDs to indicate the program position in WORKER. The various status lights are: ACTIVE, WAITING FOR EVENT, P-EVENT, S-EVENT, CALCULATE FFT, ABORT, WAITING FOR END, and HOLD.

The BOSS hardware employs 12 different types of boards. They are:(1) two UART boards (RCA), (2) two RAM boards (RCA), (3) I/O Decode (RCA), (4) Address Latch and Bank Select (RCA), (5) Bus Interface 1, (6) Bus Interface 2, (7) Arithmetic Processor board, (8) Real Time Clock Interface, (9) Time-Code Interrupt, and (10) four PROM boards, (11) Status Display, and (12) the CPU board, for a total of 17 boards.

The two UART boards handle I/O via RS 232 interfaces. One board is at 300 baud to a hard-copy printer, and the other interfaces a cassette recorder at 9600 baud. The Arithmetic Processor board uses the Advanced Microdevices 9511A, described earlier, to handle the floating point arithmetic in BOSS. This board, with the associated software, does a 32-bit multiply or divide in 5 milliseconds, a 30 times improvement over the RCA floating point package. The Real-Time Clock board accesses the BCD output of a Sprengnether TS-250 timing system. The Time Code Interrupt board provides the 100/sec interrupt for timing purposes in BOSS. The remaining boards are identical to WORKER boards.

The two remaining boards in the system are the Bus Generator and the Bus Module boards. The Bus Generator board provides the 2 MHz basic clock signal to the system. It is crystal-controlled and provides four control signals to the system at a 10 KHz bus message rate: latch request, source, destination, and transfer pulse. It also provides the ADC sample command pulse to the system at 100 per sec, a 16-bit time code number, and master reset. The

Bus Module board provides the logic for priority encoding and message detection on the bus.

The system is powered by a 25 watt 12 volt to +5 volt DC-DC converter and a 6 watt 12 volt to ± 12 volt DC-DC converter. The power requirement of each microcomputer system is about 1 watt. One 12 volt automobile battery can run ASP for at least one day, depending upon the activity level.

IV. ASP OPERATION

Upon power-on or reset the message in Figure 7 is printed. In response the operator may choose to do nothing, which will result in all parameters being set to default values, or he may set the parameters to desired values. An "S" command will prompt a request for sampling rate, number of stations, and the coordinates of each station, as well as a time correction value for each station. Once these station parameters are entered by the user the other values may be entered in any order. Level 1, Level 2, and WORKER parameters are shown in Table 1 with their default values. The extent of processing is controlled by "M", which selects the desired modes. Any or all of the modes described in the BOSS software section may be used. Finally, the user may select a shortened version of printout by entering "P" and responding to prompts about optional printout on EVENT COUNT and LOCATION results.

Typica l set-up time for a 15 station network is about 20-30 minutes. At any time any of the values may be changed. The usual procedure is to start out with all modes operating until the rate of earthquake activity is determined. At that time, stations may be moved, the velocity model modified and/or processing changed. In any case, ASP offers flexibility in field procedures by providing the user with results during the experiment, in a real-time mode.

To date, ASP has been used in four different field areas; The Geysers, California, and the Cerro Prieto, Mexico, geothermal fields, the Nevada test site for monitoring explosion aft-erevents, and in an aftershock sequence at Livermore Valley, California.

The Geysers

The initial field test was carried out in The Geysers steam field in northern California during September and October of 1980. We use this experiment to illustrate the capabilities and peculiarities of ASP.

Figure 8 gives the station distribution relative to Power Plants 9, 10, 11 and 15, in addition to the production and injection wells at The Geysers. During 23 days of monitoring, 562 events with magnitude between 1/2 and 2 were detected on 5 or more stations. Of these 562 events, 189 were judged to have good locations. In Figure 8 are 94 good events from the last 5 days of operation when ASP had passed its field test and had been freed to run unattended. To determine the validity of these 94 locations, the data were compared with locations from the U.S.G.S. Calnet and from an augmented Calnet at The Geysers operating on the automated U.S.G.S. system of Rex Allen (see Allen and Ellis, 1980).

The eleven Calnet events located within this area and time period were also detected and located by ASP. Because the Calnet station distribution is less dense (although it is quite dense by normal microearthquake network standards), this is not a very good comparison. A better comparison can be made with events located by the augmented U.S.G.S. array. Figure 9 shows the principal stations of the augmented network. Although more widely spaced than ASP stations, they are located more carefully at quieter sites, resulting in similar detection threshold sensitivities for the two nets. During the last 5 days of the recording period 32 events were located simultaneously by the two systems, and both locations are given in Figure 9. Both sets of hypocenters show the same general distribution in plan view and in a NW-SE cross-section, shown in Figure 10. Although ASP located 94 good events during the 5-day period, and the U.S.G.S. system only 32, the latter system was down for part of the 5-day period. In general, both systems seemed to detect and locate the same events during periods of simultaneous operation. ASP, however, missed 7 events that the U.S.G.S. system had located and assigned a quality of either A or B. Four of these misses were due to ASP being busy with a prior event (this experiment was conducted before, and provided motivation for, the implementation of the

fast arithmetic processor chip). The other three misses were apparently due to high noise levels at noisier ASP sites.

Figure 11 shows the differences between epicenter locations for the 32 events located by both systems. True locations are, of course, unknown. In all the ASP locations shown, however, the epicenter is nearest to the station that had the first arrival. To be a good location by ASP standards this 'closest to first arrival station' criterion had to be satisfied in addition to small RMS P-residuals. This 'nearest station' criterion is violated by most of the epicenters located by the augmented U.S.G.S. system, whose locations are systematically displaced N or NE of ASP epicenter. The RMS difference in the NS direction is 1.05 km, and 0.24 km in the EW direction.

Focal depth differences are less systematic, reflecting the inherent difficulty in trying to locate an event in 3-D with a 2-D array (see Figure 12). U.S.G.S. locations cluster around 2 km depth, with ASP locations clustering at 1 and at 3 km. We observed this bimodal depth distribution in a previous study at The Geysers, using conventional processing and an equally dense array in the production zone (Majer and McEvilly, 1979), and it was not detected in the special Geysers study of Marks, *et al* (1980). The half-space velocity model is probably sufficient for small arrays where travel paths are largely vertical. It thus seems that, where 0.5 km or better hypocenter accuracy is needed at depths less than 5 km, 0.5 - 1 km station spacing is required throughout the area of interest. For example, Figure 8 shows the earthquakes and the positions of the active production and injection wells at The Geysers. Even from these data, it would be difficult to conclude that earthquake activity was related to either production or injection, so that any such conclusions reached with far less dense network coverage are no more than speculations.

Cerro Prieto

The second use of ASP was at the Cerro Prieto geothermal field in northern Mexico. Although similar in array dimensions and objectives to The Geysers study, the Cerro Prieto experiment differed in that previous monitoring had indicated a higher level of microearthquake activity outside of the production region than within. Despite this, the aim was to identify any earthquake activity within the production zone and to relate it to reservoir dynamics including a search for evidence on regions of possible mass and heat transfer. Figure 13 shows the station distribution relative to known fault zones and production activity. At the time of the survey, the main production was coming from an area defined by wells M 114, M 9, M 101, and M 109. In total, 26 wells were contributing to 150 MW of power production. M 9 is the only injection well. The microearthquake situation was further complicated by the magnitude 6.7 event of June, 1980, approximately 25-30 km southeast of the field on the Cerro Prieto fault system, and by aftershocks of the 1979 Imperial Valley earthquake to the north.

During 17 days of monitoring, 119 events were recorded on 4 or more of the 11 stations deployed. Of these 119 events, 40 were located within the array area. Twenty-nine of the 40 were judged to be good quality locations. These 29 events are shown in Figure 13. To discriminate against events outside of the array ASP has two mechanisms. In the first, an S-P input parameter, when exceeded, prevents location, and a message is printed out to that effect. The second mechanism is a time window in which a minimum number of P-readings must be received before an event is judged valid for further processing. For Cerro Prieto, this time window was 0.9 sec. That is, BOSS had to receive at least 4 P-readings in a 1 second time period (TW), however, the minimum time (PTMIN) between the first and last P-reading had to exceed 0.1 second. The maximum S-P time allowed was 3 seconds. By adjusting these parameters, i.e., minimum number of stations (NMIN), time window (TW), and the minimum P-time difference (PTMIN), it is possible to look at events within a specified time and space window, while eliminating system glitches. Applying these methods it was possible with a minimum amount of post-processing to conclude after only 17 days of monitoring that there has been a

clear increase in seismic activity in the production zone over previous levels (Majer *et al*, 1980), and that there is excellent coincidence of hypocenters with the mapped fault zones.

Nevada Test Site

At the Nevada Test Site ASP was used to monitor the sequence of afterevents associated with an underground nuclear explosion, before, during and after cavity collapse. The 12-station net surrounding the explosion 'BASEBALL' (15 January 1981) had station spacings of several hundred meters. The purpose of the experiment was to monitor the collapse process and the distribution of after-collapse events in time and space, and to determine the b-value for these events. It was obvious from the data that a shallow strong lateral velocity gradient was confounding the half-space location method. Even though the explosion was located to within 5 meters in depth and 20 meters in the x direction, the focus was biased 200 meters in y. Prior to collapse the rate of events was so great that ASP could not isolate discrete P-times associated with a single event for reliable processing. Examination of the simultaneously recorded analog tape, however, revealed that it is virtually impossible to do so even by conventional methods. Sixty-two post-collapse events over a four-day period gave b-values of 1.0 to 1.1 and 21 hypocenters were obtained, although noise and event interference conditions degraded location quality. This exercise also showed that a minimum size must be imposed on events for b-values computations, in order to avoid effects of incomplete detection.

Livermore Valley

The fourth ASP test was in the Livermore Valley of California, approximately 15 months after a strong M_L 5.5 earthquake (Bolt, *et al*, 1981). The array dimensions were approximately 25 by 30 km with 5-10 km between stations. This network is operated by Lawrence Livermore National Laboratory (LLNL) and monitored by an automated system (HP-1000 computer) that detects and stores the events for future analysis. In this test ASP was operating on the same

data that were being monitored simultaneously by another automated system (The Geysers study involved two different arrays). During the first 3 weeks of the 5 week study 347 events were detected on 3 or more stations. During the last 2 weeks of operation 52 events were detected by 4 or more stations. Only 5 of these latter events were located with good results, primarily because the events were either occurring outside of the array and/or they were being detected by only 3 or 4 stations. The LLNL system detected 20 events that were subsequently located with high qualities within the array. Of these 20 events ASP detected all of them and located 12, but only 3 were located with results rated good. This experiment illustrated again the limitations in using a half-space velocity model in a large network. In addition, this experiment exposed, because of extensive unattended operating periods, several subtle problems in software, subsequently corrected, which resulted in the gradual loss of stations through WORKER lock-up.

Another ASP application, with somewhat different hardware and at a much smaller scale, has been in the monitoring of thermally-generated acoustic emissions associated with underground storage of nuclear wastes (Majer *et al*, 1981). The array dimensions are on the order of meters for this experiment in the Climax facility at the Nevada Test Site. A transient waveform analyzer is used to detect the high frequency signals in the 1-20 kHz band and to play them back at a reduced rate such that ASP can process the data. This experiment has demonstrated the flexibility of ASP in applying earthquake processing techniques to a variety of different scales of interest. Results to date from the Climax study have demonstrated the validity in scaling of the rock fracturing process from earthquake size faults down to fractures of the acoustic emissions scale, probably centimeters in length.

V. EVALUATION AND CONCLUSIONS

Overall, the ASP concept has proved to be well-founded, and applicable in a variety of situations. Furthermore, throughout the experiments described here, which followed a thorough burn-in program, only one hardware failure has occurred - in a PROM chip of one of the WORKERS. The field system, mounted in a truck, has been used in a variety of weather and dust conditions and transported large distances with no adverse effects. The low-power DC operation (1 watt/channel), coupled with hardware reliability, allows remote field operation for extended periods of time.

An attractive feature not initially appreciated is the "plug-in" capability of ASP to an existing array. ASP in reality is little more than a device for parallel time-series analyses that is programmed specifically for the location and characterization of discrete seismic events. The architecture of the ASP system, with a single computer monitoring and pre-processing each channel of data and supplying results to a controlling computer for network processing, has broad potential in any signal acquisition and analysis application.

The microearthquake processing software developed for ASP is relatively simple, requiring accurate data for effective usage. Our attention to accuracy in timing, amplitude, and spectral algorithms was absolutely necessary to the successful implementation of ASP. With processing time now reduced to less than one minute per earthquake, the goals of cost-effectiveness and real-time results have been attained with no compromise in quality.

The next development step is to improve the processing power of BOSS. This will be achieved by adding a Digital Equipment Corporation (DEC) LSI11-2 to ASP to augment the present BOSS processing. BOSS will then be responsible only for determining the validity of an event and feeding valid data to the LSI-11 for all mode calculations. An improved location program using a gradient over a half space will augment the present location program. Two additional modes will also be added. A moment tensor inversion will be used to determine the principal stress directions, using as input data the long-period spectral values for the P- and S-waves and the polarity of the P-wave at each station. The second new mode will be a Wadati

analysis to determine V_P/V_S from P and S-P times. The LSI-11 will be switched on only for computations, thus adding negligibly to the ASP power consumption.

With the addition of the LSI-11 computer ASP will provide fast complete on-line analyses that has been achieved to date only with lab-based mini-computer systems. It is clear that the "ASP-type" approach to in-field data handling and analysis has application at varied scales to a range of seismological and other geophysical problems.

ACKNOWLEDGEMENTS

Implementation of the ASP concept with the 1802 microprocessor was a major accomplishment in program development on the part of three individuals. Jerry Heinsen provided the early expertise vital to initial definition of overall operating system architecture and the crucial interrupt-driven WORKER routines, and then developed the program set with associated protocol. James Bartschi worked painstakingly through the often bedeviling task of debugging the complete software package, and also incorporated the high-speed arithmetic hardware and software. P.J. (Rick) O'Connell wrote and implemented the FFT and related software routines. The engineering staff of the Seismographic Station offered ongoing support throughout the development of ASP. This work was supported by the Assistant Secretary for Conservation and Renewable Energy, Office of Renewable Technology, Division of Geothermal and Hydropower Technologies, and by the Assistant Secretary for Nuclear Waste Isolation, U.S. Department of Energy under contract #W-7405-ENG-48.

References

Allen, R.V. and J.O. Ellis, 1980, An automatic on-line monitor for microearthquake networks. *EOS*, *61*, 1030.

Bolt, B.A., T.V. McEvilly and R.A. Uhrhammer, 1981, The Livermore Valley, California, sequence of January 1980. *Bull. Seismol. Soc. Amer.*, *71*, 451-463.

Brigham, E.O., 1976, The Fast Fourier Transform, Prentice Hall, 225 pp.

Brune, J.N., 1970, Tectonic stress and spectra of seismic shear waves from earthquakes. *J. of Geophysical Res.*, *75*, 4997-5009.

Brune, J.N., 1971, Correction (to Brune, 1970). *J. of Geophysical Res.*, *76*, 5002.

Inglada, V., 1928, Die Berechnug der Herdkoordenate eines Nahbebens. *Gerlands Beitrage Geophysik*, *19*, 73-98.

Majer, E.L., 1978, Seismological investigations in geothermal regions. Lawrence Berkeley Lab., Rept. No. 7054, 225 pp.

Majer, E.L. and T.V. McEvilly, 1979, Seismological investigations at The Geysers geothermal field. *Geophysics*, *44*, 246-269.

Majer, E.L., T.V. McEvilly, A. Albores, and S. Diaz, 1980, Seismological studies at the Cerro Prieto geothermal field. *Geothermics*, *9*, 79-89.

Majer, E.L., T.V. McEvilly, and M.S. King, 1981, Monitoring a underground repository with modern seismological methods. *Int. J. of Rock Mech. & Min. Sci.*, in press.

Marks, S.M., R.S. Ludwin, R.B. Louie and C.G. Bufe, 1980, Seismic monitoring at The Geysers geothermal field, California. U.S.G.S. Open-file Rept. 78-798.

Stewart, S.W., 1977, Real-time detection and location of local seismic events in central California. *Bull. Seism. Soc. Amer.*, *67*, 433-452.

Table 1. BOSS and WORKER parameters showing default values in parentheses. BOSS values are floating-point ($<10^{38}$) while WORKER numbers are integer.

LEVEL 1 PARAMETERS

NMIN (1) = minimum number of PT values needed in time window TW before any processing is started in the BOSS.

TW (2) = Time window in seconds.

DTMAX (8) = maximum average S-P time in seconds accepted for an event. If greater than, no location is done.

NB (3) = Number of events with S times before a b-value is calculated.

SLMIN (1) = Minimum SQ/PQ accepted before S-times are used in event location.

MINPTDE (0.1) = Minimum PT difference (PT_{last} - PT_1) accepted for an event before any further processing is done in the BOSS, i.e., this is calculated after the NMIN criteria is met. ('Deglitching' parameter.)

LEVEL 2 PARAMETERS

VP (5) = P-wave velocity, in same units as station coordinates.

VPVS (1.7) = P-wave velocity to S-wave velocity ratio.

PVC (3) = velocity for elevation correction for PT times.

SVC (2) = velocity for elevation correction for ST times.

PQMIN (5) = Minimum PQ (P-quality) accepted before FFT values are processed.

SQMIN (8) = Minimum SQ (S-quality) accepted before FFT values are processed.

W (1) = Weighting factor for S times in location program.

WORKER PARAMETERS

N (16) = Window length, either 16, 32.

KP (4) = P trigger level parameter (in range 2-10), i.e. PTRIG = KP x LTA.

KS (2) = S trigger level parameter (in range 2-10), i.e. STRIG = KS x PA.

LS (12) = S time threshold (in range 10-16); (LS/8) x PA = ST timing point.

TTH (12) = P time threshold (in range 10-16); (TTH/8) x LTA = PT timing point.

G (1) = Gain correction factor for amplifiers, 60 db = 1, maximum value 32768.

VARIABLE DEFINITIONS

PA = (PSUM/(64 x GAIN))

SA = (SSUM/(128 x GAIN))

PQ = (PSUM/(64 x LTA))

SQ = (SUM/(128 x LTA))

ST = (ST-16 x ((STA-STLEV)/(STH-STL))

STLEV = ST timing point

STH = $\sum^{4}$ X'(t)/4, 4-point average after ST

STL = $\sum^{4}$ X'(t)/4, 4-point average before ST

FIGURE CAPTIONS

Figure 1 A 15 channel ASP as packaged for field use in a van.

Figure 2 Top: Block diagram, two-channel prototype seismic data acquisition/processing system, showing card structures for BOSS (master) and WORKER (channel) modules. Bottom: Generalized block diagram of 128-channel seismic field system, illustrating 16-channel modular architecture.

Figure 3 Examples of P- and S-wave detection (second vertical lines near onsets) and timing (first line of pairs) for impulsive and emergent signals. Upper traces $X(t_i)$ are original data, lower $X'(t_i)$ are the derived function for processing.

Figure 4 Examples of ASP processing and two different events. Shown on each event are the P and S windows selected for FFT processing, polarity of the events (18 and -14), quality of P waves and S waves (P = 12,4; S = 50,9), arrival times of P and S waves [bars on $X'(t_i)$] corner frequencies (26,19,11,11) and high frequency slope values (γ = 5,5,3,3). These data were sampled at 200 per second.

Figure 5 An example of printout received after each earthquake. PT = arrival time (in machine counts 100/sec) of P-wave; PA = P-wave amplitude, PQ = P-wave quality; PP = polarity and quality of P-wave; PSL = P-wave spectral length; PFO = frequency values of corner frequency; PLP and PEX are mantissa and exponent of long period level; PGI and PGF are integer and fraction of frequency exponent for high frequency slope; ST = S-time; DT = S-P time; SA = S-wave amplitude; SQ = S-quality; SSL = S-wave spectral length; SFO, SLP, SEX, SGI, and SGF are the same as PFO, PLP, PEX, PGI, and PGF, except for S-wave. See text for definitions of parameters. This printout is for the DEBUG mode and lists the most complete output data set.

Figure 6 System program maps for WORKER and BOSS showing program locations and lengths. Numbers are in hexadecimal. See text for roles of individual programs.

Figure 7 Initial ASP prompt message, following power on-or reset.

Figure 8 Map of The Geysers, California, 1980 study area showing wells, stations, and epicenters during the period day 290-301, 1980.

Figure 9 The Geysers geothermal field showing ASP and augmented USGS stations and both epicenters for 32 commonly located events (* = ASP, R = USGS).

Figure 10 Hypocenters of 32 common events projected onto vertical sections AA' (* = ASP, R = USGS foci).

Figure 11 Epicenter position differences between ASP (*) and USGS (R) solutions for 32 common events, connected by line segments.

Figure 12 Projection of 32 foci pairs onto vertical section AA'.

Figure 13 Map of Cerro Prieto, Mexico geothermal field showing faults, temporary seismographic stations, wells, and epicenters of local microearthquakes determined by ASP.

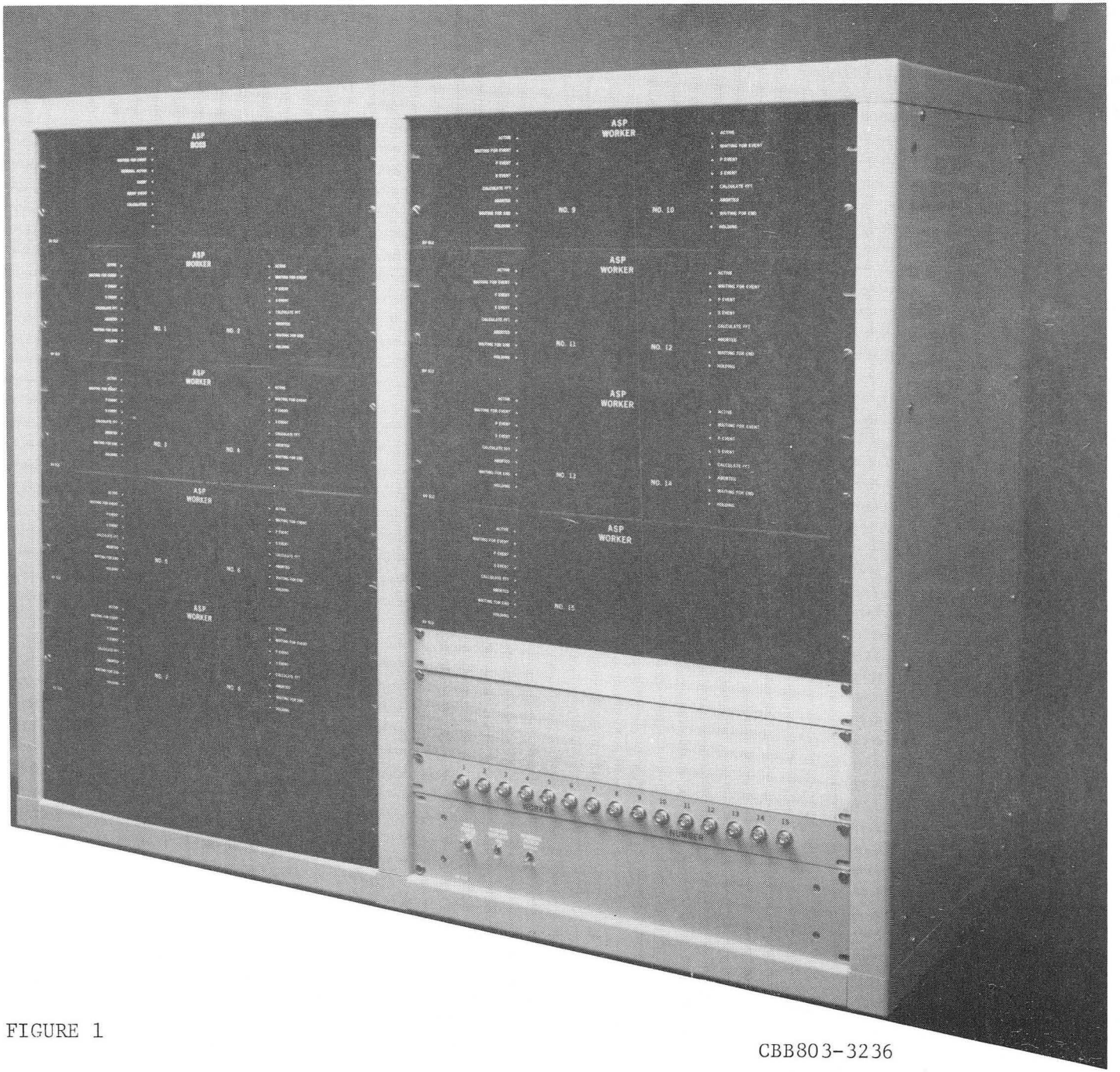

FIGURE 1

CBB803-3236

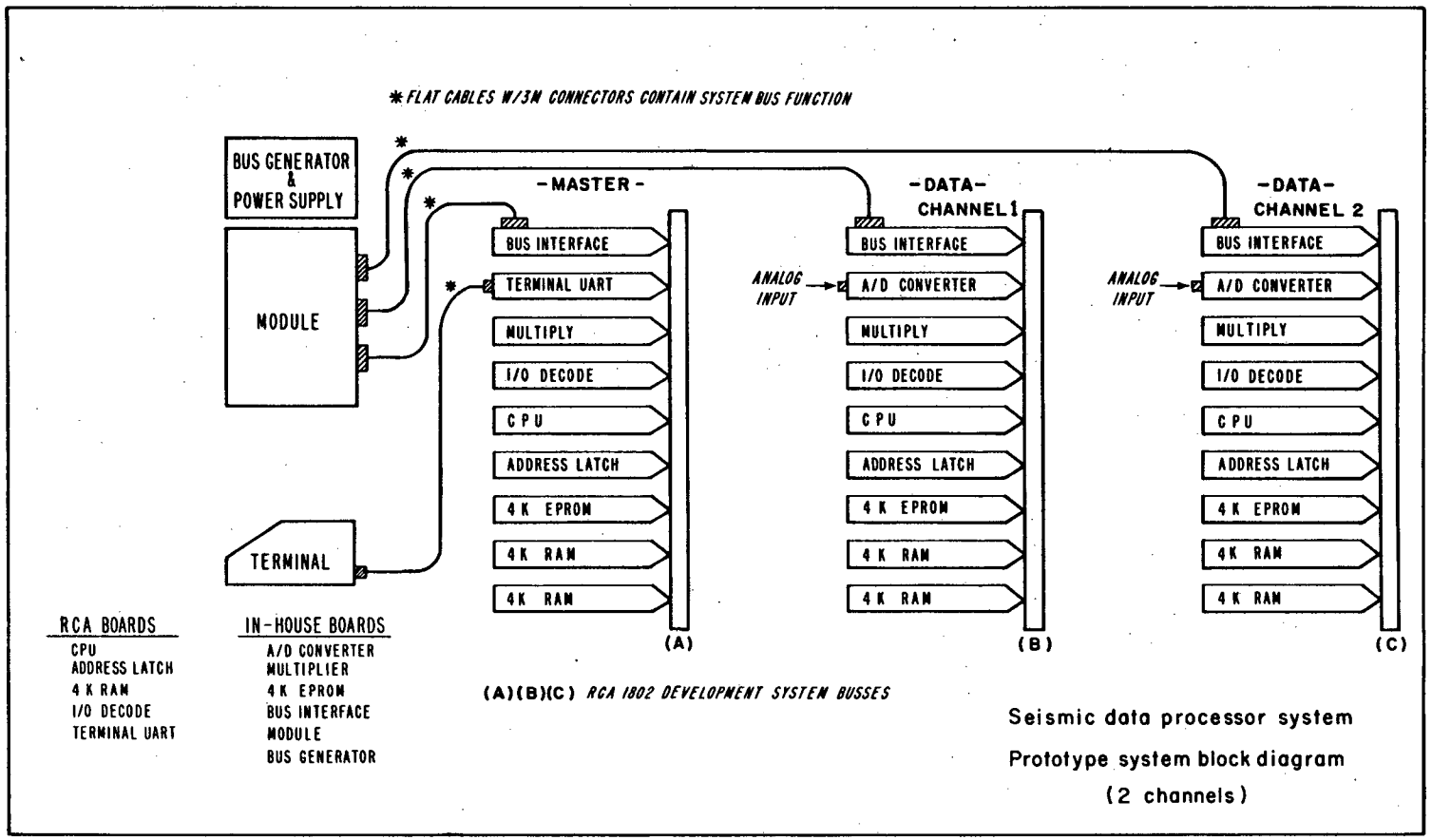

Seismic data processor system
Prototype system block diagram
(2 channels)

XBL 7812-14137

FIGURE 2a

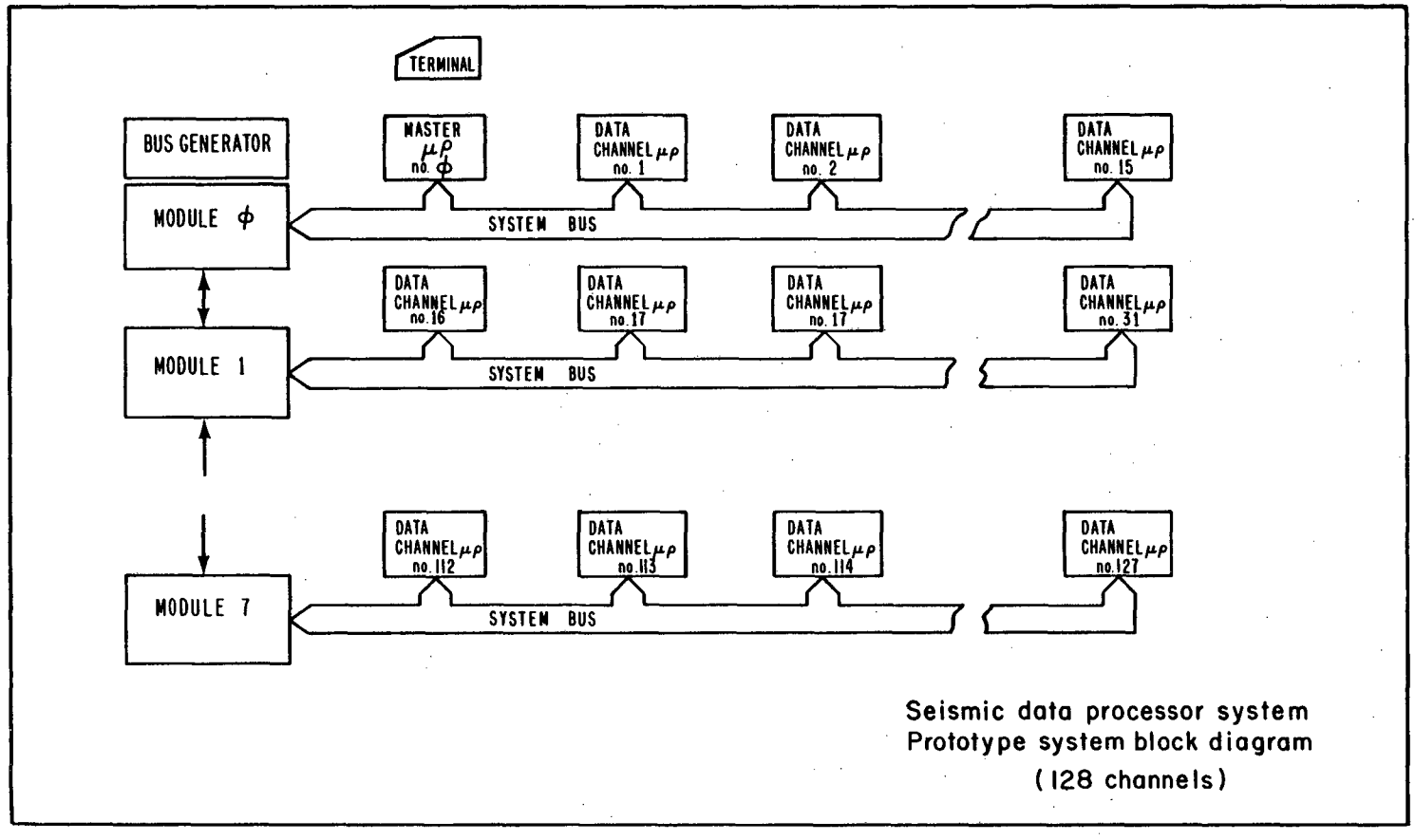

Seismic data processor system
Prototype system block diagram
(128 channels)

XBL 7812-14138

FIGURE 2b

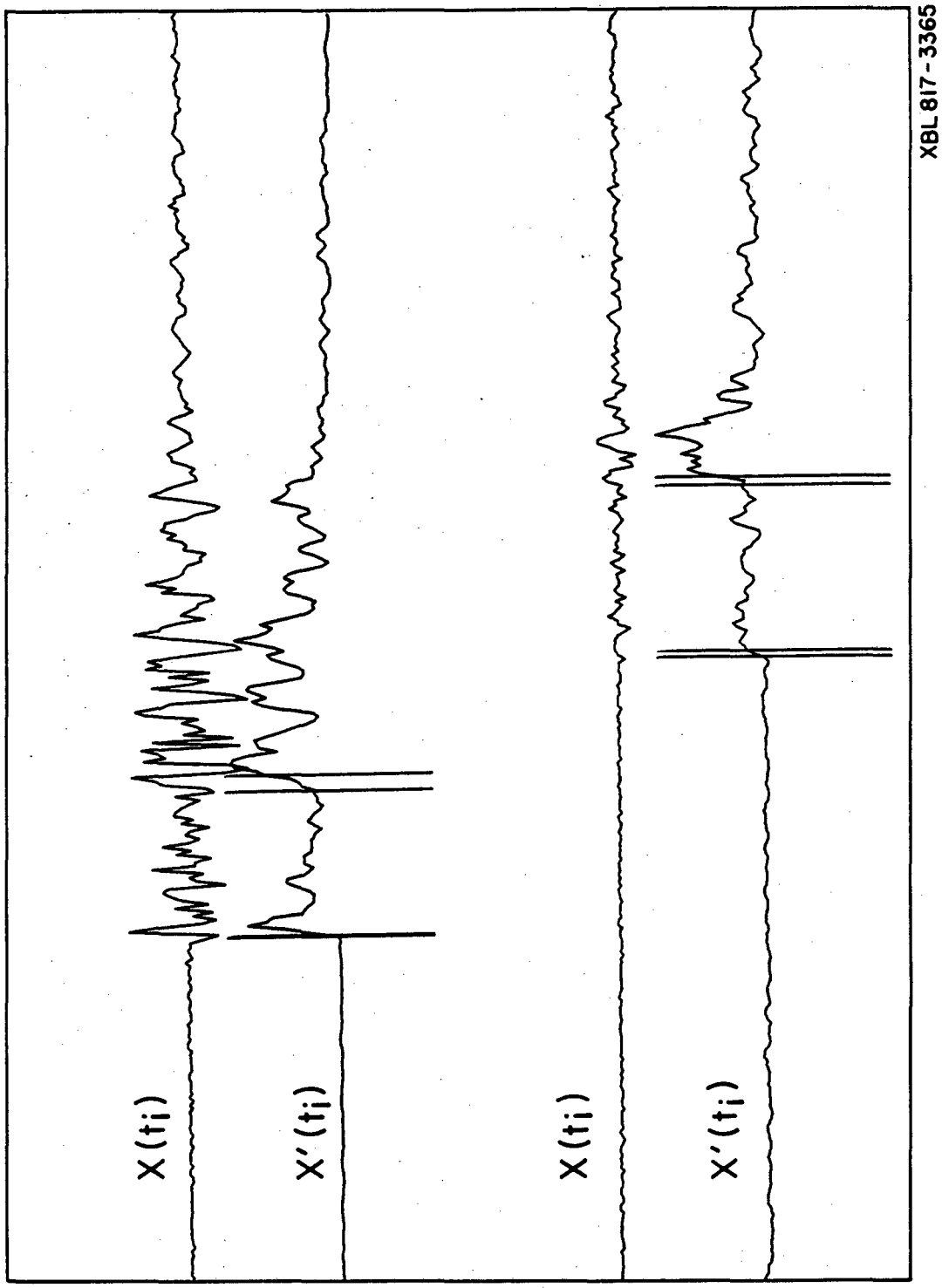

FIGURE 3

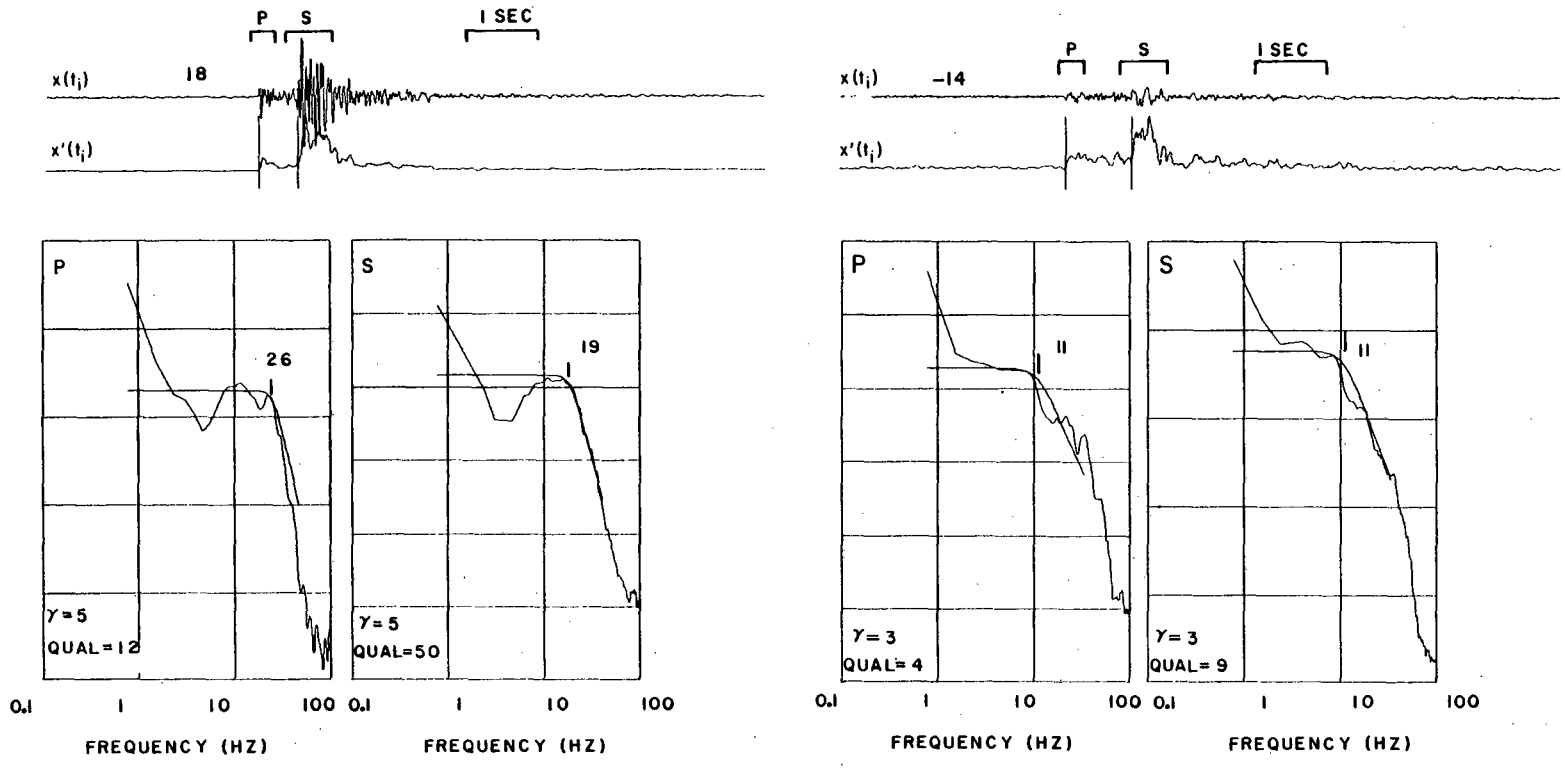

XBL 802-8307

FIGURE 4

```
*****************
***** EVENT *****
*****************

DAY  HR  MIN  SEC
321  17   54   32

***** DEBUG PRINTOUT (RAW DATA)

P MESSAGE:
  WORKER        PT          PA          PQ
 +10000+01  +59492+05  +32524+04  +18000+02
 +20000+01  +59492+05  +17158+04  +38998+02
 +30000+01  +59492+05  +19558+04  +20000+02
 +40000+01  +59472+05  +38048+04  +16000+02

Q MESSAGE:
  WORKER        PP
 +10000+01  +19299+03
 +20000+01  -62000+02
 +30000+01  +68996+02
 +40000+01  +90000+01

F MESSAGE:
  WORKER       PSL         PF0         PLP         PEX         PGI         PGF
 +10000+01  +64000+02  +13000+02  +25412+05  -50000+01  +10000+01  +26410+05
 +20000+01  +64000+02  +24000+02  +27878+05  -70000+01  +20000+01  +11296+05
 +30000+01  +64000+02  +26000+02  +26760+05  -70000+01  +30000+01  +14844+05
 +40000+01  +64000+02  +20000+02  +20648+05  -50000+01  +20000+01  +32134+05

S MESSAGE:
  WORKER         ST          DT          SA          SQ
 +10000+01  +59736+05  +24398+03  +43544+04  +25000+02
 +20000+01  +59708+05  +21600+03  +29704+04  +66992+02
 +30000+01  +59700+05  +21298+03  +32294+04  +34000+02
 +40000+01  +59696+05  +22898+03  +39276+04  +16000+02

G MESSAGE:
  WORKER       SSL         SF0         SLP         SEX         SGI         SGF
 +10000+01  +12800+03  +34000+02  +17399+05  -40000+01  +30000+01  +15458+05
 +20000+01  +12800+03  +36000+02  +25746+05  -50000+01  +20000+01  +22690+05
 +30000+01  +12800+03  +36998+02  +25104+05  -50000+01  +30000+01  +28230+05
 +40000+01  +12800+03  +38998+02  +17664+05  -40000+01  +30000+01  +20266+05


***** EVENT COUNT
TOTAL EVENTS = +20000+01

   DTAV        PAAV        SAAV        PT1
 +22550+01  +26822+04  +36208+04  +40000+01

   NDT0        NDT1        NDT2        NDT3
 +14665-38  +14665-38  +20000+01  +14665-38


***** RUNNING B-VALUES

    NBT         BP         BPC         BS         BSC
 +20000+01  +50020+03  +50020+03  +64248+03  +64248+03


***** LOCATION ORIGIN DATA *****

   EVENT TIME        - DELTA
DAY  HR  MIN  SEC     (SEC)
321  17   54   32   -01.897

     X0          Y0          Z0      RMS(PRES)  RMS(SRES)
 +48132+01  +18786+01  +93776+01  +20001-00  +57307+00


STATION RESULTS
  STATION     HYPO RAD   AZIMUTH    IO ANGLE     P RES      S RES
 +10000+01  +10347+02  +34040+03  +25000+02  -20174-00  +00000+00
 +20000+01  +10049+02  +93624+02  +21072+02  -15228-00  +60057+00
 +30000+01  +10156+02  +11633+02  +22586+02  -16366-00  +54419+00
 +40000+01  +94544+01  +22952+03  +72928+01  -26335-00  +00000+00


***** POLARITY
  STATION   (+) UP/(-) DN
 +10000+01  +19299+03
 +20000+01  -62000+02
 +30000+01  +68996+02
 +40000+01  +90000-01


***** FFT P RAW DATA
  STATION     F0 (HZ)      LPL        GAMMA
 +10000+01  +10156+02  +99281+00  +18061+01
 +20000+01  +10748+02  +27228-00  +23446+01
 +30000+01  +20312+02  +26136-00  +34530+01
 +40000+01  +15624+02  +80671+00  +29806+01


***** FFT S RAW DATA
  STATION     F0 (HZ)      LPL        GAMMA
 +10000+01  +13280+02  +13588+01  +34718+01
 +20000+01  +14062+02  +18059+01  +26924+01
 +30000+01  +14452+02  +98382+00  +38616+01
 +40000+01  +15233+02  +13803+01  +36184+01


***** FFT P STATION DATA
  STATION     MOMENT      RADIUS      STR D       DISPL       GAMMA
              (DYNE*CM)    (CM)       (BARS)       (CM)
 +10000+01  +41948+21  +18332+05  +29782+02  +17664+01  +18061+01
 +20000+01  +11168+21  +99296+04  +49916+02  +16037+01  +23446+01
 +30000+01  +10816+21  +91664+04  +61568+02  +18259+01  +34530+01
 +40000+01  +31128+21  +11916+05  +80512+02  +31040+01  +29806+01


***** FFT S STATION DATA
  STATION     MOMENT      RADIUS      STR D       DISPL       GAMMA
              (DYNE*CM)    (CM)       (BARS)       (CM)
 +10000+01  +11680+21  +82464+04  +91144+02  +24318+01  +34718+01
 +20000+01  +83984+20  +77880+04  +77796+02  +19604+01  +26924+01
 +30000+01  +83024+20  +75776+04  +83408+02  +20468+01  +38616+01
 +40000+01  +10842+21  +71888+04  +12768+03  +29698+01  +36184+01


***** FFT P AVERAGE DATA
   PFNUM      MOMENT      RADIUS      STR D       DISPL       GAMMA
              (DYNE*CM)    (CM)       (BARS)       (CM)
 +40000+01  +23768+21  +12336+05  +55444+02  +20750+01  +26460+01


***** FFT S AVERAGE DATA
   SFNUM      MOMENT      RADIUS      STR D       DISPL       GAMMA
              (DYNE*CM)    (CM)       (BARS)       (CM)
 +40000+01  +98872+20  +77004+04  +95032+02  +23522+01  +34110+01

*
```

XBL 812-2644

FIGURE 5

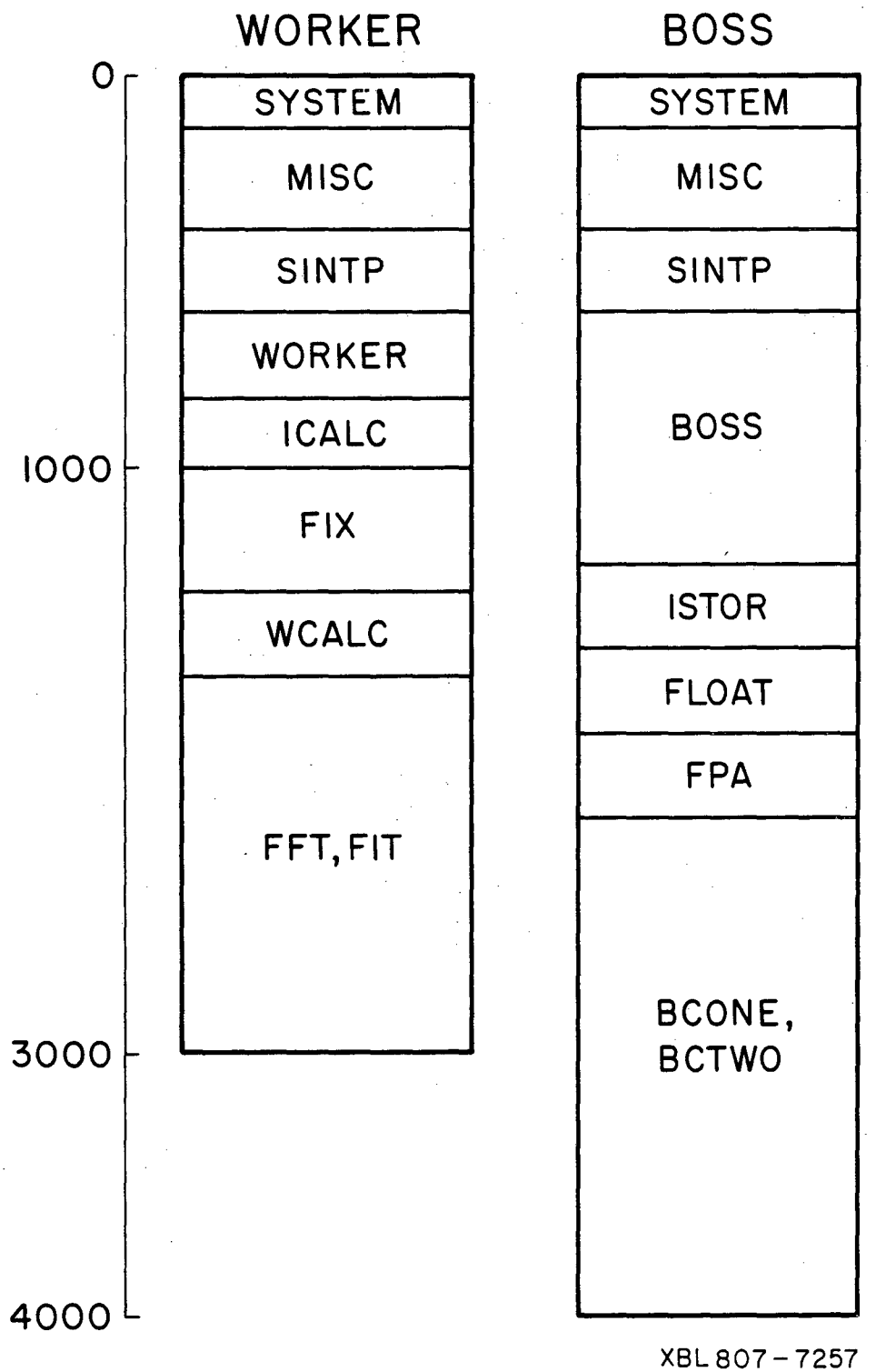
WORKER
BOSS
0
1000
3000
4000
SYSTEM
MISC
SINTP
WORKER
ICALC
FIX
WCALC
FFT, FIT
SYSTEM
MISC
SINTP
BOSS
ISTOR
FLOAT
FPA
BCONE,
BCTWO
XBL 807 - 7257

FIGURE 6

```
      AFTER * ,TYPE:

S       TO SET STATION PARAMETERS
W       TO SET WORKER PARAMETERS
1       TO SET LEVEL ONE PARAMETERS
2       TO SET LEVEL TWO PARAMETERS
P       TO CONTROL PRINTOUT
M       TO SET MODE
H       TO PRINT THE ABOVE

!! ENTER ALL NUMBERS AS FOLLOWS !!
    SMMMMMSEE   S=SIGN, + OR -
                M=MANTISSA, 5 DIGITS
                E=EXPONENT, 2 DIGITS
DECIMAL POINT IS   S.MMMMMSEE
FOLLOW EACH NUMBER WITH RETURN

* S
ENTER STATION PARAMETERS:
(SETS ALL OTHER PARAMETERS TO DEFAULT)
SAMPLES/SECOND ? +10000+03
NUMBER OF STATIONS ? +40000+01

FOR EACH STATION, ENTER COORDINATES,
ONE/LINE IN THE ORDER:
SX, SY. SZ, SC


STATION  +10000+01
+33500+01
+60000+01
+00000+00
+00000+00
DATA OK (Y/N/S  S-STOPS) ? Y
```

FIGURE 7

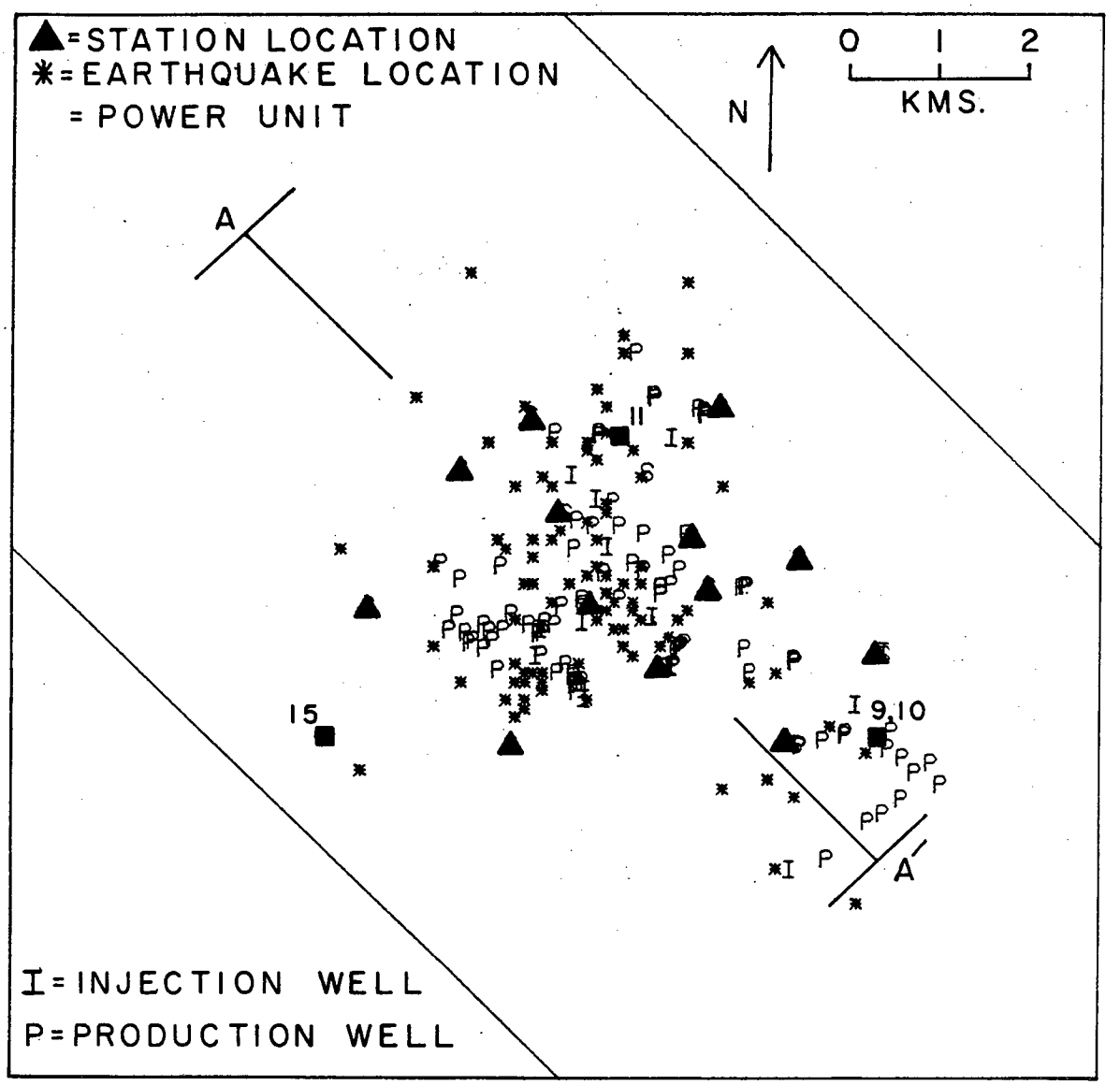

XBL 813-8568

FIGURE 8

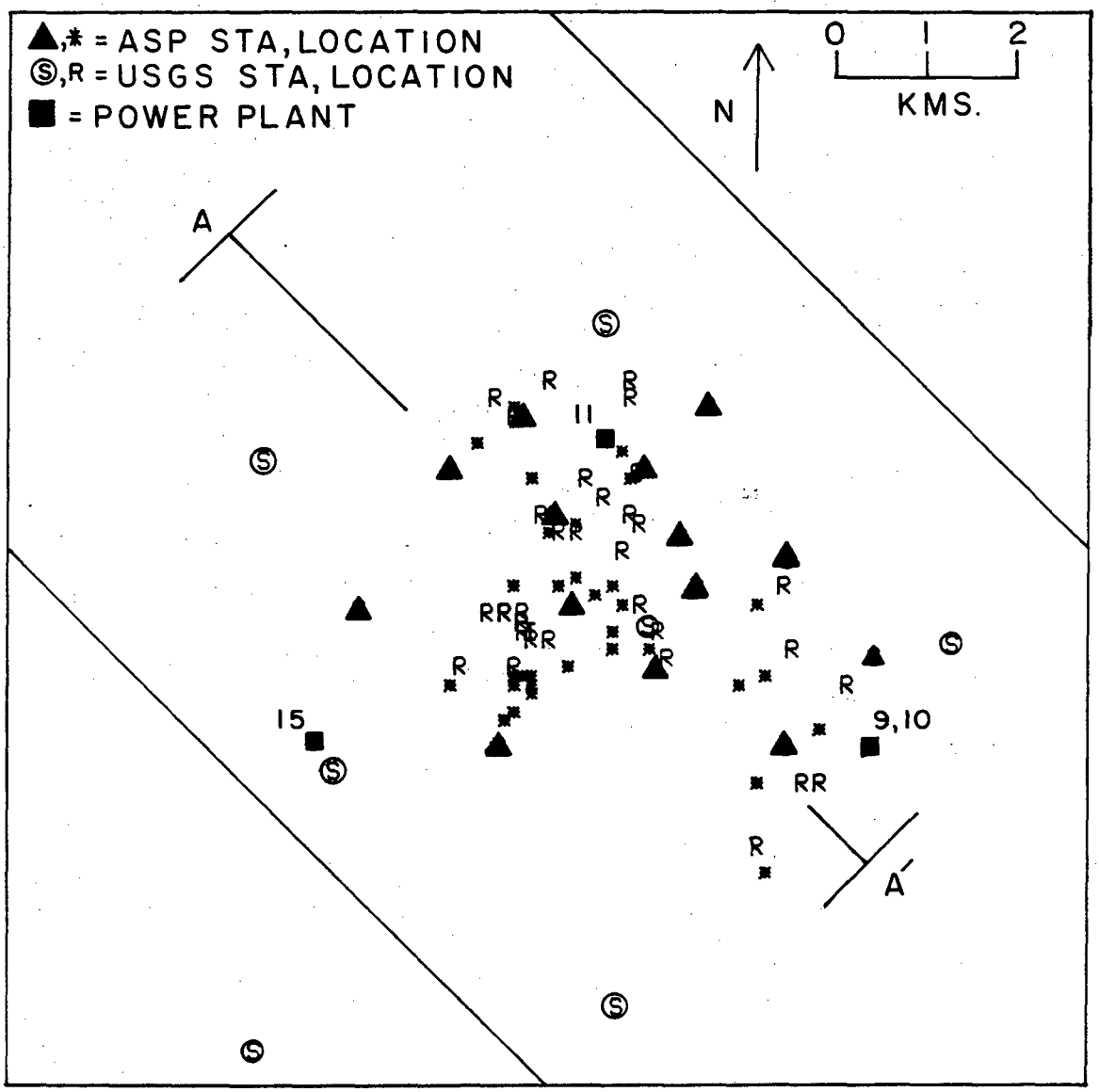

XBL 813-8564

FIGURE 9

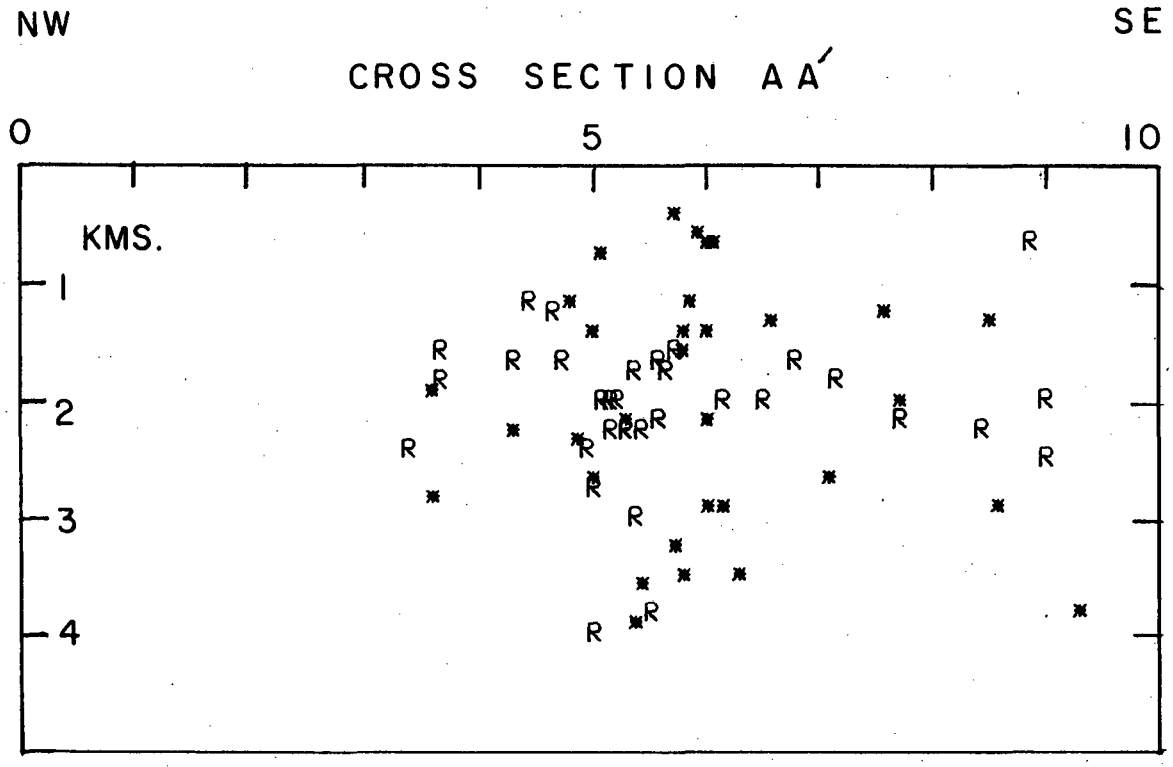

XBL 813-8559

FIGURE 10

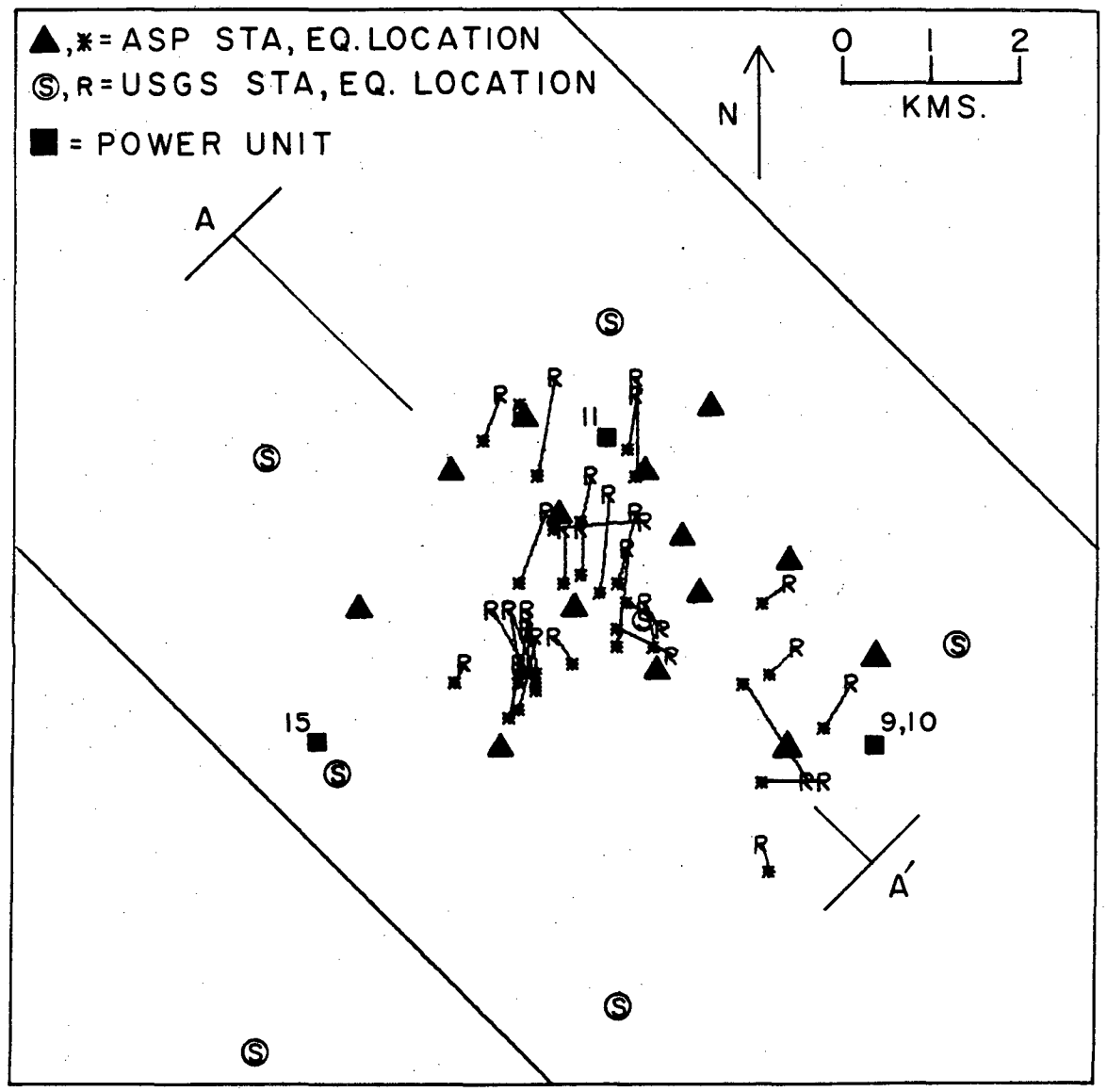

XBL 813-8563

FIGURE 11

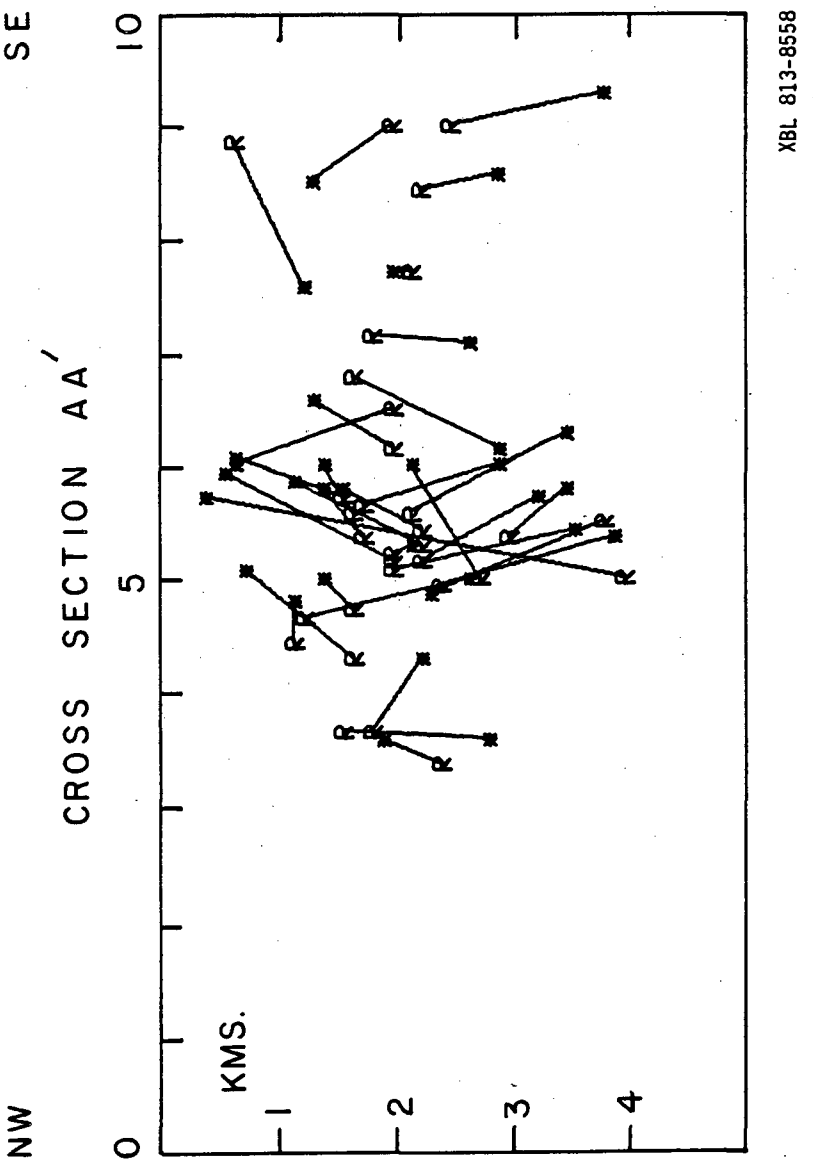

FIGURE 12

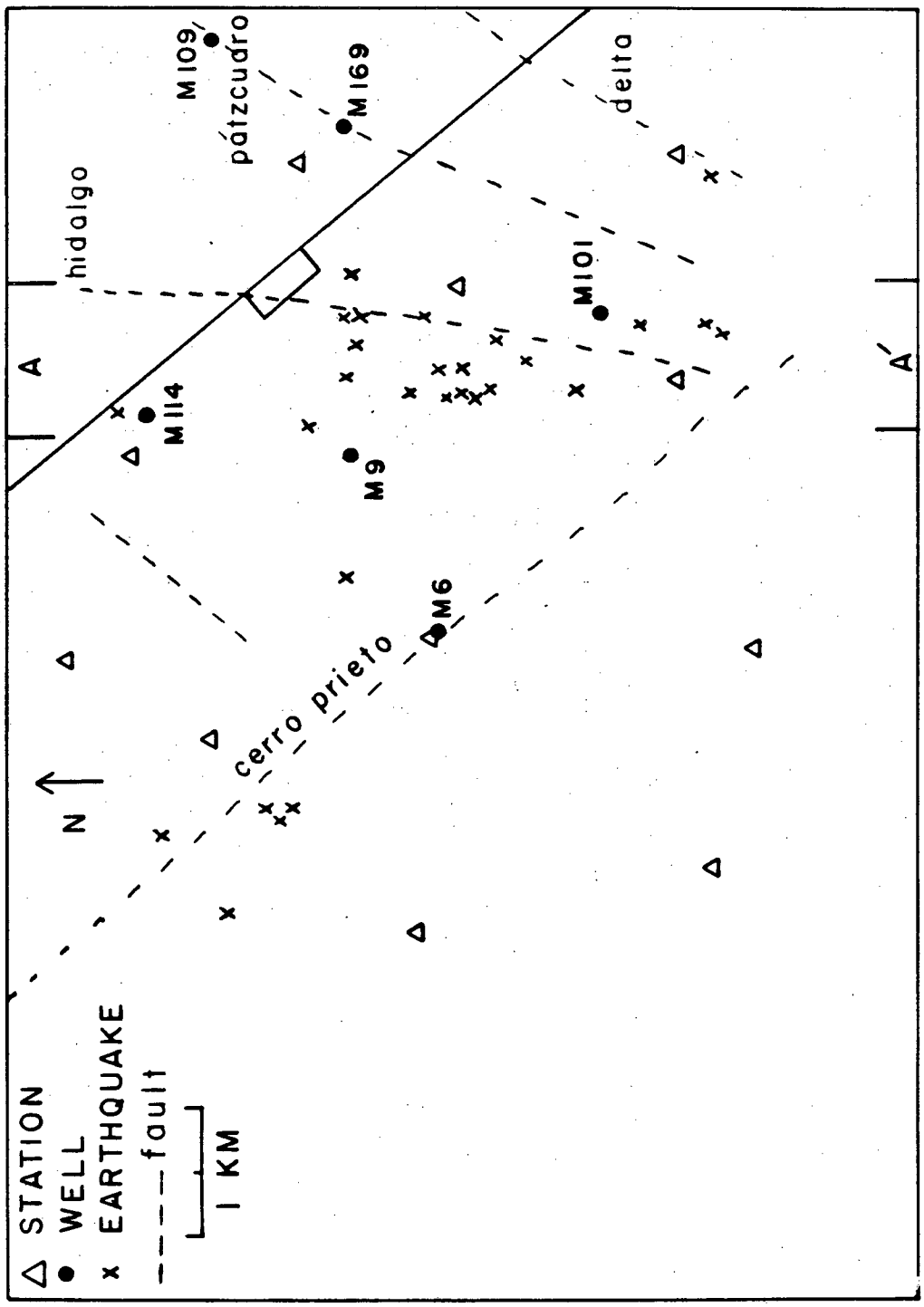

XBL 813-8569

FIGURE 13

This report was done with support from the Department of Energy. Any conclusions or opinions expressed in this report represent solely those of the author(s) and not necessarily those of The Regents of the University of California, the Lawrence Berkeley Laboratory or the Department of Energy.

Reference to a company or product name does not imply approval or recommendation of the product by the University of California or the U.S. Department of Energy to the exclusion of others that may be suitable.

TECHNICAL INFORMATION DEPARTMENT
LAWRENCE BERKELEY LABORATORY
UNIVERSITY OF CALIFORNIA
BERKELEY, CALIFORNIA 94720