LBL-13178
UC-92b c.2

Lawrence Berkeley Laboratory
UNIVERSITY OF CALIFORNIA

ENERGY & ENVIRONMENT DIVISION

RECEIVED
LAWRENCE
BERKELEY LABORATORY

OCT 2 1981

LIBRARY AND
DOCUMENTS SECTION

MOLECULAR BEAM SYSTEM FOR THE STUDY OF TRANSIENT COMBUSTION PROCESSES

F.C. Hurlbut, A.K. Oppenheim, P. Coico, and R. Peterson

August 1981

TWO-WEEK LOAN COPY

This is a Library Circulating Copy which may be borrowed for two weeks. For a personal retention copy, call Tech. Info. Division, Ext. 6782

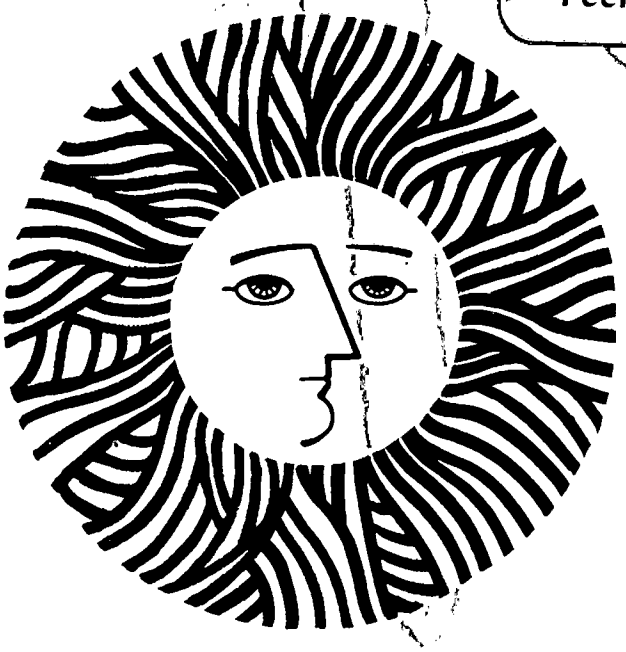

LBL-13178 c.2

Prepared for the U.S. Department of Energy under Contract W-7405-ENG-48

DISCLAIMER

This document was prepared as an account of work sponsored by the United States Government. While this document is believed to contain correct information, neither the United States Government nor any agency thereof, nor the Regents of the University of California, nor any of their employees, makes any warranty, express or implied, or assumes any legal responsibility for the accuracy, completeness, or usefulness of any information, apparatus, product, or process disclosed, or represents that its use would not infringe privately owned rights. Reference herein to any specific commercial product, process, or service by its trade name, trademark, manufacturer, or otherwise, does not necessarily constitute or imply its endorsement, recommendation, or favoring by the United States Government or any agency thereof, or the Regents of the University of California. The views and opinions of authors expressed herein do not necessarily state or reflect those of the United States Government or any agency thereof or the Regents of the University of California.

LBL-13178

MOLECULAR BEAM SYSTEM FOR THE STUDY OF TRANSIENT COMBUSTION PROCESSES

by

F. C. Hurlbut, A. K. Oppenheim,
P. Coico and R. Peterson
Lawrence Berkeley Laboratory
University of California
Berkeley, CA 94720

ABSTRACT

Construction of a direct sampling molecular beam apparatus for the measurement of concentration histories of short-lived species, in particular active radicals serving as chain carriers in the course of ignition in a hydrocarbon-air mixture, is described, including some prominent features of its design analysis. Whereas the system is not yet finished in all peripheral details, central elements have reached a sufficient degree of completion and level of function to warrant its documentation in the form of a preliminary report, incorporating the results of preliminary performance evaluation. The latter includes the measurement of the shutter function, showing the modulation of the beam monitored by a chopper to check its quality, and a time of arrival record from which it was established that the beam is fully supersonic at a Mach number of 2.34.

---

* This work was supported by the Office of Energy Research, Basic Energy Sciences Division of the U.S. Department of Energy under Contract No. W-7405-ENG-48.

INTRODUCTION

Direct sampling and mass analysis of combustion gases from flames by the method of modulated molecular beams has been of central importance to fundamental understanding of combustion processes. Pioneering work in the application of mass spectroscopy for this purpose has been done by Deckers and Van Tiggelen[1] and a lucid account of the method and development through 1971 is given by Knuth[2]. Fundamental studies using molecular beam modulation were conducted by Milne and Greene and their coworkers (see, for example, references 3 and 4) on processes in laminar flames at normal densities, and the methodology they developed was followed by many investigators: In particular, of special relevance to our work are the studies of the methane-oxygen-reaction mechanisms in steady laminar flames at reduced densities conducted using contemporary techniques by Joan Biordi[5] at the Bureau of Mines, and by Peeters and Mahnen[6] at the Catholic University, Louvain. These investigators have added insight into the temporal development of flames by charting the <u>spatial</u> concentration of all species including active radicals. The systems

employed were, however, not well adapted to the study of unsteady combustion or to the development of knowledge concerning transient processes associated with the initiation of combustion. There are, however, a few investigators who have attempted the study of transient reactions by molecular beam mass spectrometry. We cite particularly Young et al.[7] who sampled combustion gases from an engine cylinder, Sturtevant[8] who observed the productions of ions in a shock tube behind the reflected shock front and Lincoln[9] who developed apparatus for the thermal flash vaporization of materials for mass spectrometry. More recently Lincoln[10] has studied laser induced vaporization phenomena and Milne[11] has developed a new spectrometer system for the study of rapid pyrolysis.

It had become increasingly apparent that our studies of combustion processes in lean mixtures would be greatly enhanced through direct sampling studies of transient events. Specifically, it is our belief that the detailed understanding of ignition processes in lean mixtures which we may thereby achieve should have a direct bearing upon technological developments aimed at the reduction of emissions from internal combustion engines with concurrent improvement in their efficiency.

Accordingly, we have constructed a direct sampling molecular beam system with the objective of providing a new order of detail in diagnostic information in which special emphasis would be placed on measurements of concentration histories of short-lived species, in particular, active radicals serving as chain carriers. While our system is not finished in all peripheral details, the central elements have reached a sufficient degree of completion and level of function to warrant its documentation

through a preliminary report incorporating the results of preliminary performance evaluations.

We are primarily concerned with applications to those processes which govern the initiation of combustion within lean homogeneously pre-mixed gases. Within these complex events, there are encompassed thermal processes, chemical kinetic phenomena, including prominently auto catalysis (enhancement of reaction due to intermediate species), as well as electrical excitation and photochemical effects. In the comprehensive analysis of these processes we remain handicapped by the uncertainty of data on reaction mechanisms and chemical kinetic rates pertaining to the action of active radicals as well as their diffusivity and loss. Such knowledge can be greatly enhanced by information on concentration histories of essentially short-lived species over periods of the order of one millisecond. The direct sampling system with its capability for time-resolved mass analysis is envisioned as the principal tool in projected studies. Combustion will be stimulated by several means, including thermal, electrical (by spark discharge or RF excitation) and chemical (by direct injection of radicals, or photochemical irradiation). Mass analysis will be supplemented by non-intrusive optical measurements such as high speed Schlieren photography, emission and absorption spectroscopy and laser fluorescence using instrumentation currently available in our laboratory. Our objective has been to develop a system which permits the basic time resolution and sensitivity for the mass analysis which at the same time lends itself easily to concomitant operation with peripheral instrumentation.

Funding under DOE became effective at the end of 1978 and preliminary

design was initiated by January of 1979. Fabrication of primary physical components was completed in the fall of 1979 and the system was placed under vacuum in the late spring of 1980. By early summer, some elements of the computer control system were brought into operation, the function of the fast ATD converter was checked, and the mass spectrometer was used for the analysis of calibration gases. Further installation of instrumentation ensued, and the preliminary transient response evaluation described here was completed in June 1981. It would appear from the outcome of the work done so far that we are now ready to undertake a systematic study of the time history of unsteady combustion processes beginning, as a comprehensive feasibility demonstration, with the quantitative observation of radical production by flash photolysis.

EXPERIMENTAL SYSTEM

Time Resolution

The study of ignition processes in lean mixtures has been conducted over the past several years at the U.C. Berkeley Gas Dynamics Laboratory. A portion of this undertaking of particular significance to the initial stages of the projected studies has been carried out using flash and high speed cinematographic Schlieren photography to record transient ignition within a combustion test cell. In this work, typically, the test cell, 9 cm in diameter and 9 cm in length, was filled initially with a homogeneous methane/air mixture in proportions corresponding to lean ignition limit at room temperature and atmospheric pressure. The cylindrical cell fitted with optically flat glass windows at both ends,

was placed in the path of a Schlieren system. A jet of active radicals was injected transversly to the optic axis from either a plasma generated or a small combustion pre-chamber across an orifice about 1 mm in diameter producing a jet spreading through the gas mixture in the test cell and furnishing for it a distributed set of ignition sources. The jet plumes were shown to traverse the test cell within 1 millisecond before ignition was initiated. Thereafter, combustion continued for 30 to 50 milliseconds until all the gas in the test cell was burned. The results of these studies were presented by Oppenheim and his coworkers[12,13], with all the details included in the dissertation of Teichman[14] and in a report by Cetegen et al.[15].

Of particular relevance to the investigations we wish to undertake are the typical durations of events. To reiterate, the development and decay of the jet plume is completed within 1 millisecond and the ensuing combustion process in the form of a flame consumes the whole charge contained in the test cell within 50 milliseconds. With this temporal context in mind we established 1 microsecond as a reasonable and practicable minimum time increment within which to record the signal amplitude associated with a particular mass. The mass analyzer signal is derived from a particle multiplier-detector which can be used, depending on count rate and associated instrumentation, in either a direct pulse counting mode or an analog signal mode. If we were to employ direct pulse counting, our time increment constraint would imply a counting rate capability of 10^9 Hertz for an amplitude resolution of 3%, assuming stochastic statistics for a single experimental point. We decided instead to deal with the detector output as an analog signal and

to employ a fast ATD converter with a capability of $\sim 10^6$ words per second. Provisions for slower counting rates and observation times of arbitrary length are made. A discussion of the signal train implementation follows.

System Overview

Whereas the sampling system is by no means limited to use with jet ignition devices and combustion test cells as described in the foregoing, it was nonetheless envisioned that such experimental methods will feature importantly in most of our future studies. Thus, our apparatus must have the capability of sampling directly from reactive mixtures at 1 atmosphere pressure and permit the time resolved mass analysis of all species present. From considerations of cost and simplicity of installation and control, we elected to use a quadrupole mass spectrometer. This choice, however, carries with it the restriction that the system will permit only one species to be examined at a time. Accordingly repetitive cycling of the experiment will be required, both to observe each molecular species and to provide data for signal averaging.

For many reasons it became desirable to control the several functions including the precise timing of events and to accomplish the recording and analysis of data through a resident dedicated computer. The use of this computer will be extended to the control of ancillary optical devices when demanded. Because of the potential for controlling a number of peripheral elements it was decided to adopt the CAMAC approach. The computer system itself is described in a later section.

The foregoing considerations have led to an experimental apparatus

described schematically in Fig. 1 to perform repeated time-resolved mass analyses, permitting at the same time the recording of concomitant fluid mechanical phenomena by Schlieren photography. The equipment showing presently installed elements is depicted in Figs. 2 and 3. The apparatus consists of several sub-systems which may be identified according to function as follows:

1. Molecular beam
   consisting of the sampling source, skimmer, modulator with timing signal generator, associated with vacuum pumps, gages and controls.
2. Quadrupole mass analyzer
   constisting of an ionizer, analyzer, particle detector, RF power supply, High-Q head, ionizer control and quadrupole control.
3. Signal train
   consisting of a preamplifier, voltage amplifiers and fast ATD converter.

*4. Test cell and igniter
   including the igniter trigger.

*5. Schlieren system

6. Central processor (command and recording module)
   consisting of MIK/II mini-computer, with DEC writer and monitor, clock controller, mass select DTA converter, and* peripheral control interface.

*7. Cycle controller for combustion test cell and igniter.

*8. Combustion gas and calibration gas supply and metering including calibration source cell.

The components marked with asterisks are not installed at the time of this writing, except for the calibration source cell. In

addition (not shown) a synchronous detector has been installed to assist with initial calibration. Detailed accounts of items 1, 2, 3 and 6 will be given in later sections of this report.

At this point one should examine the overall function of the system during the course of a typical repeated time-resolved mass sampling experiment. With reference to Fig. 1 and to the events sequence schedule listed in Table 1, let us consider for this purpose an ignition event triggered by an igniter.

To begin with the system is made ready to cycle under computer control at a repetition interval of 5 seconds*. At time 0.5 seconds, the purge cycle is activated during which the test cell is evacuated and filled with a fresh combustible mixture. At the same time the igniter is readied for firing and the mass number is set, using the Mass Select DTA Convertor, for the first cycle. At 5 seconds the purge is completed and at 5.1 seconds a signal activating the igniter is given. The system is in readiness for firing. At the next pulse from the modulator-photodiode system, following a suitable time delay, the igniter is fired. the ATD converter receives and stores 1024 words, of 10 bits each, over an adjustable period of from 1 to 50 milliseconds. At 5.5 seconds the purge cycle is again activated and the second mass number is set. At 5.7 seconds the buffer memory of the ATD converter is unloaded into the central processor. At 10.1 seconds the next signal activating the igniter is sent and at 10.1+ seconds the igniter is again fired. Stored data are updated each time the cycle returns to a particular species.

---

*Any organization of the sampling process can be arranged; the one described is typical.

TABLE 1: EVENT SEQUENCE SCHEDULE

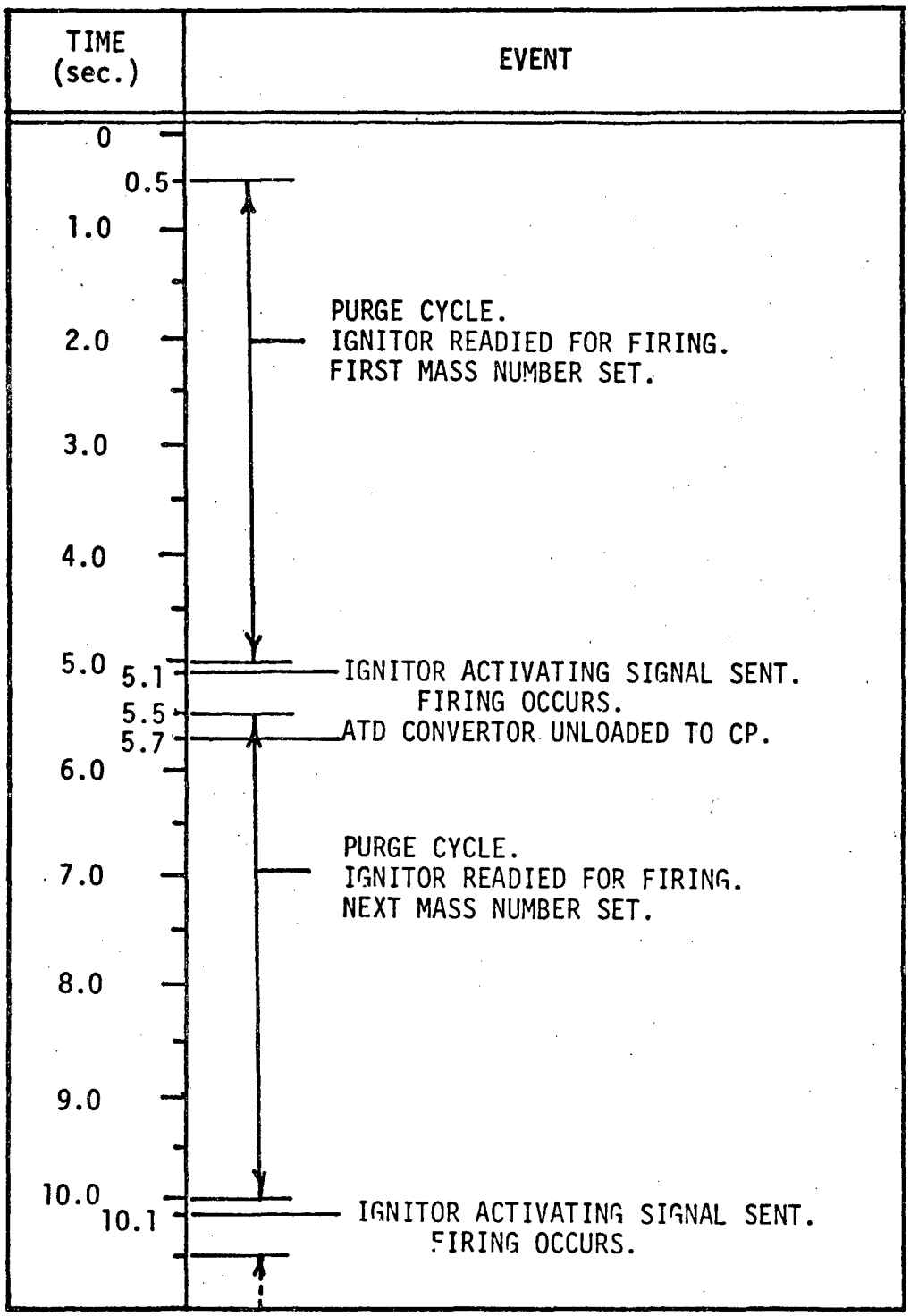

A full cycle over 8 species would require 40 seconds.** It should be appreciated that full operation as described above will be realized only following a substantial development effort. For initial experimentation in the near future a combination of manual and central processor control will be used.

Molecular Beam and Detection System

Well established guidelines have been followed in the design of the molecular beam elements. These have been set forth, for example, by Knuth[2] or Bossel, Hurlbut and Sherman[16]. Our objective is to extract a high intensity beam of particles from the source region and to pass it without any change in composition into the ionizer region of the mass spectrometer. Both goals can be realized using contemporary methods. Gas from the source region is sampled when it enters a small thin-edged hole at tip of a conical sampling probe. A free-jet expansion is formed and at a downstream location, where the flow is both hypersonic and rarefied, the gas on the central streamline passes through a hole at the apex of a conical skimmer.

For most chemical species expanding rapidly from source conditions to a rarefied state through an orifice of practically zero length, the alteration in active radical concentration alond the jet centerline is essentially negligible. McLean[17] examined the decay of radical concentrations under such conditions for three chemical processes, the high temperature dissociation of H_2, the reactive combination of H_2/O_2 and

---

*At this point, we are not sure of the exact time required to purge the system and charge it and accordingly, the cycle time cited here is just an initial estimate.

that of H_2/F_2 with all intermediaries taken into account. Orifice size and stagnation pressure were treated as independent parameters. It was concluded that for orifices in the sub-millimeter range at stagnation pressures of 20 atmospheres or lower the concentration of radicals remained virtually unchanged throughout the expansion.

The physical arrangement of the beam system may be seen in Fig. 4. The sampling orifice, typically 50 to 80 μm in diameter, was provided by the open end of a truncated quartz conical shell (1).* The quartz shells were made by shrinking quartz to a graphite mandrill, then polishing the external surface to the desired cone angle. The hole was ground through the remaining thin tip and the edges trued by fire polishing. A final fine grinding produced the finished contour. A micro photo of a completed tip is shown in Fig. 5. It may be noted that the desired configuration was achieved, although with some imperfections of a non-critical nature. The circular marks are, for example, on the inside of the quartz cone and result from turning marks on the graphite mandrill. The quartz tip was fitted to a stainless steel holding shell using epoxy cement. The holding shell was attached by screw thread to the major entrance cone. Except for the first seal, all closures were made vacuum tight with Viton "O" rings or copper gaskets. Precise axial and transverse positioning of the tip relative to the skimmer was achieved through the four 40-thread studs shown at (2). To conserve the delicate quartz tips in preliminary testing, we have used sapphire watch jewels with preformed holes of ~ 70 μm diameter. The flat faces and relatively long channel length, however, make these

*Circled numbers appear on Fig. 4.

unsatisfactory for the study of active radicals.

The skimmer (3), next along the beam path, is a conical electroformed nickel shell terminated at the small end by a sharp-edged opening of ~ 250 μm diameter. The lip radius is < 20 μm, the external cone angle is 30° and the internal cone angle 25°. A larger conical shell of stainless steel supports the nickel tip.

Sharp-edged skimmers in hypersonic flows exhibit nearly perfect skimming at nondimensional axial locations, x/d, of 60 to 80[16] where x is the distance of the skimmer from the source orifice and d is the source orifice diameter. Optimum skimming requires an adequately large pressure ratio to insure that the normal shock which terminates the free jet expansion is well downstream of the skimmer tip and also to insure that $\lambda/D \gg 1$. Here λ is the mean distance between molecular collisions at the tip of the skimmer and D is the skimmer diameter. We have met criteria applicable to beams of low temperature permanent gases, but recognize that skimmer performance for dense beams of active radicals must be evaluated at the time of comprehensive calibration studies.

All but a small fraction of the gas from the beam source must be removed from the expansion region which has to allow a relatively large volumetric flow. The terminating normal shock in a free jet expansion lies at a distance x_s/d, given by the expression[17]

$$x_s/d = 0.67 \left(\frac{P_o}{P}\right)^{1/2} \qquad (1)$$

where P_o is the source pressure and P the downstream static pressure. Since x_s/d must be at least as large as 100, we find that P should not

be larger than about 50 μm Hg for a source pressure of 1000 torr, and the smaller it is the better. We find this limit to be easily achieved with the use of a Varian 6" VHS Oils Diffusion pump (2400 ℓ/sec) backed by a Welch mechanical pump model 1397. Table 2 lists all vacuum pumps and gives typical operating pressures for nitrogen at a standard source pressure of 1 atmosphere. As shown there the expansion region pressure is 1 micron (μm Hg) or less, while the fore vacuum pressure near the diffusion pump exit is ~ 50 microns. To allow an additional margin of capacity we have coupled a large mechanical pump (Kinney Model KT 150 72 ℓ/sec) to the fore vacuum line through a shut off valve.

The volumetric flow through the source orifice depends, of course, on the nature of the system under study. If we assume a typical stream velocity of 1000 m/sec through an orifice of 250 μm diameter (3 to 5 times larger in diameter than presently planned) from a reservoir at 760 torr pressure, we require a pumping speed of ~ 150 ℓ/sec to maintain 1 micron pressure downstream of the expansion. Should higher speeds be required, a 10 inch Varian VHS oil diffusion pump currently available in the laboratory will be substituted for the VHS 6.

Since the gas stream approaching the skimmer is rarefied and hypersonic, a negligible fraction of entering molecules will strike the internal surface. On the other hand, the narrow cone angle provides a sufficiently large annular passage between the sampling cone and the skimmer to accommodate adequate pumping.

Beyond the cone, the beam passes through a collimating region (4) connected by means of a double manifold (5) to a second VHF 6 diffusion pump. The divergence angle of the beam is approximately 0.083 radians.

TABLE 2: VACUUM PUMPS AND TYPICAL OPERATING PRESSURES

	MANIFOLDS TO SYSTEM			FORELINES		
	FIRST STAGE	SECOND STAGE	THIRD STAGE	FIRST STAGE	SECOND STAGE	THIRD STAGE
TYPE	NRC VHS-6 DP	VARIAN VHS-6 DP	VARIAN VHS-6 DP	DUO-SEAL MP MODEL NO. 1397	DUO-SEAL MP MODEL NO. 1397	DUO-SEAL MP MODEL NO. 1402
SPEED	2400 ℓ/s (AIR)	2400 ℓ/s (AIR)	2400 ℓ/s (AIR)	425 ℓ/min (AIR)	425 ℓ/min (AIR)	140 ℓ/min (AIR)
NOMINAL OPERATING PRESSURE [SYSTEM STATIC]	1×10^{-6} TORR	1×10^{-6} TORR	5×10^{-7} TORR	< 1 MICRON	< 1 MICRON	< 1 MICRON
NOMINAL OPERATING PRESSURE [BEAM ON 1 ATMOSPHERE]	1.2×10^{-3} TORR	7.7×10^{-5} TORR	7.4×10^{-7} TORR	190 MICRONS	< 1 MICRON	< 1 MICRON

A toothed wheel modulator (6) which intercepts the beam in this region serves both to produce a modulated beam for steady state analysis and to provide a timing signal which synchronizes the lock-in particle detector and initiates time resolved detection. The modulator wheel can be given various configurations. To accommodate the time resolution study as described later in this report, the wheel is 5.7 cm in diameter and contains two slots, 180° apart, each of ~ 4.7 mm width. A light emitting diode and photo diode pair located diametrically across the modulator from the beam axis provide the timing signal through an amplifier and pulse generating circuit shown in Fig. 6. The modulator wheel is driven by Globe Industries Model 53a12-2 synchronous motor at speeds to 400 Hz which in turn is powered by a variable frequency oscillator, phase splitter and two-channel audio amplifier. Electric current to each channel is monitored to permit balancing and adjustment for minimum power.

The beam passes next through a 2.5 mm diameter collimator orifice (7) and then into the flow-through ionizer of the mass spectrometer (8). Most of the beam proceeds on into a high vacuum region pumped by a third VHF 6 diffusion pump which, in this instance, is equipped with a water-cooled chevron baffle. Pressures are characteristically in the mid-range of 10^{-7} to 10^{-6} torr.

A window (9) is placed on the beam axis above the top elbow to facilitate alignment. A similar window (10) is placed at the other extreme of the beam axis below the calibration cup. Initially all the components of the system are aligned using an He-Ne laser while the apparatus is open; the source cone is then mounted and aligned without displacing the laser. At this point the system is evacuated and final

alignment is completed. The intensity of the molecular beam is then maximized by small adjustments under flow conditions.

Since the majority of closures are completed using Viton "O" rings, a modest bake-out up to 200°C would be permitted. The system can be let up to atmospheric pressure using bottled dry nitrogen.

Quadrupole Mass Spectrometer and Signal Detector Train

It was concluded, as we have noted earlier, that mass analysis in the context of our program would be best accomplished by the use of a modern, high resolution quadrupole mass spectrometer. The equipment manufactured by Extra Nuclear Laboratories, Inc. (ENL), was selected for our application in consideration of its stability, resolution, and mass range. This system consists of four major elements which taken together create a usable signal current from ions of a predetermined mass number. The first of these elements, the quadrupole power supply, ENL Model #001-1, consists of the quadrupole control unit, the RF power supply and the High-Q head. The RF supply is adjustable over frequencies of 1 to 6 MHz, but it is used at one frequency only in conjunction with a particular High-Q head, in our case the #015 at 1.25 MHz. The later is essentially a tunable resonanter which supplies a stable RF signal to the analyzer at the appropriate voltage level. The third component, the power supply control unit, is required for the control of mass number and of mass resolution and of potentials needed in calibration.

The second major element is the quadrupole assembly, in our system ENL Model #4-324-9, which consists of four 19 mm dia x 22 cm long pole pieces in a thermally stable mount. The combination of High-Q head and

quadrupole which we have installed permits nominal mass resolution of 300 at mass 28 and 1000 at mass 350, this latter figure being the upper limit mass number. By a change of High-Q head to ENL Model #012, the resolution could be more than doubled for mass numbers smaller than 60. The third element of the analyzer system is the ionizer control, ENL Model #020-2, which supplies and regulates the ionizer emission current and the electron energy and provides ion extraction and focus potentials. This unit operates in conjunction with the ionizer itself, ENL Model 041-2, which in the present case is of the cross-beam, flow-through configuration. The molecular beam passes through the ionizer without reflection from internal structures thus permitting time-of-flight measurements and reducing non-signal background. The ionization efficiency of this design is nominally one ion per 10^4 beam particles.

Ions extracted from the ionizer are accelerated into the analyzer and then transmitted or rejected according to the charge-to-mass ratio. Surviving ions are post-accelerated at 2000 to 3000 volts to the electron multiplier particle-detector. Here, from several options, we have elected to use a 21-stage copper-berrylium multiplier permitting a maximum output current of 100 μa and having a nominal gain at 3000 volts of 10^7. At steady state, particle beams of 10^{14} per second in which a concentration of 1 part in 10^3 of the species of interest might be found, would produce maximum allowable detector current. Under transient conditions at data rates as high as 1 word per micro second, time-resolved mass data should be readily observable. The lower limits of concentration at which measurable signals can be obtained will depend on system noise and data acquisition rate and can only become known for particular cases as experience with the system is gained.

Signals from the particle detector are transmitted through a 5 cm length of coaxial cable to a fast preamplifier providing a power gain of approximately 10^5 and a voltage gain of 10. The preamplifier provides an impedance match between the very high impedance output of the particle detector and low impedance input of the next element of the signal train. A low noise, low bias current operational amplifier connected as a DC coupled, unity gain voltage follower is in turn connected to a second operational amplifier which provides voltage gain and buffers the first section. Circuit details are shown in Fig. 7. The band pass of the present preamplifier is estimated from test bench measurement to be about 500 KHz. Two other designs are currently under study with the objective of achieving with these units the needed current amplification and signal-to-noise ratio while increasing the band pass to 2 MHz.

Signals are next passed through a time response selector which limits the signal frequency pass band to values consistent with the desired data acquisition rate. Thereafter, signals are amplified in an additional stage of voltage gain and led to the fast analog-to-digital (ATD) converter. This unit, which is coupled to the central processor and controlled by it, is described in the next section.

Central Processor

Many factors influenced the decision to control data taking and system operations sequencing through a dedicated resident computer. Paramount among these was the recognition that digital methods were required for the acquisition and buffer storage of fast transient signals. It was realized as a second factor that great simplification

could be achieved in the management of multi-faceted data acquisition cycles as compared with semi-automated operator control. It was envisioned that these cycles would be repetitive in nature and that the data acquisition would extend over long periods of time.

The CAMAC design approach is particularly suited to the present task and was accordingly adopted by us. CAMAC refers to a modular system of instrumentation interface and control designed to interact with a computer. The computer may be resident, that is, located within the CAMAC housing or "crate", as is the case for our system, or it may be at a remote location. Modules such as an ATD converter or clock timer or stepping motor control interact with external devices and execute their functions when activated by certain signals from the computer as transmitted by the back-plane Dataway. A large variety of compatible modules are now available in the industry and a very substantial background of experience at the Lawrence Berkeley Laboratory has been drawn upon in the course of our design.

A Standard Engineering "Ultima 3000" powered crate, a DEC "PDP11/2" micro-computer (licensed to sell under the Standard Engineering trade name MIK-II) and Data Systems "DSD-440" flexible disk memory system comprise the central elements of the processor. Input/output operations are handled through a Lear-Siegler "ADM-3A" monitor with graphics capability and a "DEC Writer, II". The RT-11 user system, which supports several common programming languages, is employed. In our application the Fortran language is used because of its availability and familiarity. Programs controlling the interfacing and control modules are easily written using subroutines supplied by Standard Engineering.

The Ultima 3000 powered crate is a 25 slot unit with integral power and cooling fans. Regulated power is supplied by the unit at the standard values at ± 6 and ± 24 volts. The DEC PDP 11/2 mini-computer occupies three module slots at the far right of the crate. This computer is a 16-bit processor which interfaces with the Dataway of the crate. Each module in the crate is assigned a unique bus word address, enabling the processor to handle directly data transfer and control functions. Thirty-two kilowords of random access memory are supported by this computer. In addition, the system includes the DSD-440 flexible disk subsystem with diskette drives having random access capability. The memory capacity of this system is 512 kilobytes per "diskette". The average access time is 296 milliseconds, and the average reading rate is 16 kilobytes per second.

The DEC writer II performes the essential function of providing an operations log as well as supplying hard copy records. The monitor CRT terminal, a Lear-Siegler ADM-3A, has been upgraded with a Retro Graphics Model RG-512 PC board providing graphics capability. To accommodate these terminals the system was equipped with a Plessey Peripheral Systems DLV-11-J peripheral adapter board which allows the inclusion of up to four input-output devices.

Function interface and data handling modules now installed are as follows:

1. The fast Analog-to-Digital converter, the Standard Engineering SAD-1001, converts the 10-bit words at a maximum rate of 1 MHz and has an onboard buffer memory of 1024 words. Digitizing at slower rates is accomplished through the use of clock pulses originating from the clock

controller module. The buffer memory is read into the central processor on command following each cycle of data acquisition.

2. The programmable clock, LeCroy Model 8501, generates timing pulses at any desired rate, under computer control. These pulses may be used by the ATD unit during its operation, then with rate changed, they can be used for the control of other sequencing operations.

3. The 16-bit input gate/output register, Kinetic Systems, allows information to be transferred to or from the computer via the CAMAC crate Dataway. The device includes one 16-bit input register, one 16-bit output register, four control pulses, four "handshake" signals, and full interrupt capability. Through this device the computer may be interrupted by timing pulses, function switches or other signals.

4. The digital to analog converter (DTA), Joerger Inc. DAC-16, is a device which converts a programmed 16-bit word into a voltage signal of equivalent precision. Voltage signals from this source will control the mass number observed by the analyzer. The precision of this instrument, better than 1 part in 10^4, is consistent with the requirements of the analyzer.

The foregoing elements taken together will permit the acquisition of time-resolved data arrising from experiments of several kinds. For example, in a combustion experiment entirely different in kind from the transient experiment described earlier, mass specific time-of-arrival data could be obtained giving the effective kinetic temperatures in a steady flame at the sampling orifice. At the time of this writing, as has been implied in the section System Overview, programming is still in progress. Several system elements require design and installation before this work can be completed.

MOLECULAR BEAM PERFORMANCE EVALUATION

Two major questions must be addressed at this level of system development. First, it is essential to determine whether the beam is in fact produced from a supersonic free-jet expansion, that is, whether beam temperature and macroscopic velocity are consistent with prediction based on reservoir conditions and beam parameters. Secondly, it is necessary to discover whether the measured beam intensity agrees with prediction and is thus free of otherwise undetected geometric or functional problems. The first of these questions was examined through the observation of time-of-arrival distributions for molecular beam pulses produced by the slotted disk modulator. We have made experimental observations of this sort, to be described here in detail, which confirmed that the beam is supersonic in character. The study of the second question, involving comparisons between beam signal amplitude and the input amplitude from a known pressure of nitrogen gas introduced to the analyzer, showed a close correspondence between measured and predicted beam intensity.

We consider first the evaluation of beam intensity. One approach, and perhaps the most satisfactory, is to insert an "oven" type molecular beam source into the beam axis. From known geometry and source gas parameters the oven beam density can be accurately calculated (see Bossel et al., Reference 16) and the resultant calibrated signals used for comparison with the signal due to the unknown beam. Since our instrument does not have this calibration feature, we proceeded in another way be introducing gas at a known pressure directly into the third stage and used an ionization gage for the total pressure measurement. The resultant signal from the spectrometer was then compared with the beam signal.

In this procedure the mass spectrometer was first used to assess the approximate composition of the background gas at the total pressure of the third stage. Next, pure nitrogen gas was introduced into the third stage producing a new level of pressure, now largely nitrogen. Nitrogen peaks and ion gage readings were noted. From these data the sensitivity of the spectrometer was determined for nitrogen at a particular set of operating conditions.

The next step was to find the number of nitrogen molecules within the (estimated) ionizing volume resulting from the presence of the beam. Parker's well known beam intensity function has been combined (see Ref. 2) with Sherman's free-jet expansion model[17] and with inviscid flow relations to give an expression for the beam flux, J, in terms of quantities known at the reservoir, namely

$$J = 1.4024\text{x}10^{22} \frac{A_s}{} \frac{P_o(\text{torr})}{(T_o\ M)^{1/2}} \text{GFA} \left(\frac{x}{d}\right)^{-2(2-\gamma)} \frac{\text{molecules}}{\text{sterad. sec}} \qquad (2)$$

in which A_s is the area of the skimmer, P_o and T_o are reservoir pressure and temperature respectively and M is the molecular weight. Also in (2), γ is the ratio of specific heats, $\frac{x}{d}$ is the dimensionless axial position of the skimmer, and CFA is a constant related only to γ. In the present case, for $\gamma = 7/5$, CFA = 4.258. Eq. (2) is essentially correct for Mach 3, for $\frac{x}{d}$ 2, in the absence of dimerization and non-ideal attenuations. In our test case at a pressure of 510 torr, a temperature of 290 K and a molecular weight M of 28.016, $J = 1.774\text{x}10^{18} \frac{\text{molecules}}{\text{sterad. sec}}$.

From standard compressible flow relations the macroscopic beam velocity U_b, is given by the expression:

$$\left(\frac{U_b}{a_o}\right)^2 = M^2\left(1 + \frac{\gamma-1}{2} M^2\right)^{-1} \qquad (3)$$

where M is the Mach number while $a_o = \sqrt{\gamma R T_o}$ is the speed of sound at reservoir conditions.

According to Sherman[17], $M \cong 3.64 \left(\frac{x}{d}\right)^{2/5}$ for $\gamma \doteq 7/5$, whence $M \cong 24.7$. The sound speed a_o is 3.489×10^4 cm/sec and for $\frac{x}{d} = 120$ the macroscopic velocity U_b is then 7.77×10^4 cm/sec. It should be noted that U_b is quite insensitive to the value of M for $M >> 1$.

From system geometry we find the solid angle of the beam to be 8.10×10^{-5} steradions, the beam flux to be 1.43×10^{14} $\frac{\text{molecules}}{\text{sec.}}$ and N_{IB}, the number of particles in the beam in the length of the ionizing region, approximately 1 cm, to be 1.84×10^9 molecules.

We are now in a position to compare the observed signal due to the beam with the expected signal. In a typical calibration experiment the number density of nitrogen in the third stage was raised to 6.02×10^{10} $\frac{\text{mol}}{\text{cm}^3}$. Since the ionizing region volume was estimated to be 0.18 cm^3, it contained approximately $N_{in} = 1.08 \times 10^{10}$ molecules. The ratio of N_{in}/N_{IB} was found to be 5.07 while the ratio of signal amplitudes as measured on the oscilloscope screen was also found to be 5.7. The closeness of this agreement is regarded as fortuitous because of the several approximation made. With this reservation in mind, however, it can be reasonably concluded that the beam intensity is in satisfactory agreement with prediction.

We next consider time-of-arrival measurements of pulsed molecular beam signals produced by the use of the slotted disk modulator. Such measurements were made to determine the beam temperature and macroscopic

velocity and at the same time to check the function of several elements of the signal train. As a part of the preliminary work, the shutter function was determined, this being the time dependent beam intensity function of the pulse due to the passage of the shutter slot over the beam cross section. The shutter function is obtained from the observed signal at very low wheel rotational speeds.

For the present trial, as noted earlier, a disk of 5.7 cm diameter was used having two 0.47 cm wide slots placed 180 degrees apart at its outer rim. The disk is rotated by a synchronous motor with speed controlled by an audio oscillator. An electro-luminescent diode and photo diode pair followed by a Schmidt trigger and buffer produce a timing signal at each passage of the slot. Rotational speeds may be varied from 1 Hz to 400 Hz producing 2 beam pulses to 800 beam pulses per second. Beam pulses pass through the ionizer of the mass spectrometer, yielding time varying signals at the output of the particle multiplier-detector. For the present experiments this signal is then led through a preamplifier buffer and voltage amplifier directly to the input of a 100 channel wave form analyzer (Princeton Applied Research Wave Form Eductor) as shown in Fig. 8. The timing signal from the modulator initiates the recording of data at a rate set by front panel adjustment. After integration of repeated signals the stored wave form is read out to an x-y recorder. In these preliminary studies the Eductor and x-y recorder have been used to substitute for the ATC converter and computer data handling system since software elements are not yet completed. Minimum total record time for 100 channels is 100 microseconds; however, our total time of arrival was several times as long.

Consider a collimated stream of molecules passing the plane of a shutter (slotted wheel) and continuing to the plane of the detector as shown in Fig. 9. The passage of a slot across the beam defines the shutter function $A(\tau)$ which is proportional to the time history of beam signal strength over the time of passage $\tau = 0$ to $\tau = \tau_c$. Molecules reaching the detector at a particular time of arrival, t, will have various velocities $v(\tau)$ given by

$$v(\tau) = \frac{L}{t-\tau}, \tag{4}$$

whence

$$dv = \frac{L}{(t-\tau)^2}\, d\tau \tag{5}$$

where L is the distance from shutter to detector. Since the number of molecules, dn, in a particular velocity class v to v + dv is given by

$$dn(t,v) = K\, A(\ )v^2\, e^{-\frac{m}{2kT}(v-U_b)^2}\, dv \tag{6}$$

in which K is a factor of proportionality. We may substitute from (5) above to find

$$dn(t,\tau) = \frac{K\, A(\tau)L^3}{(t-\tau)^4}\, e^{-\frac{m}{2kt}\left(\frac{L}{t-\tau} - U_b\right)^2}\, d\tau \tag{7}$$

and integrate to obtain the time-of-arrival distribution n(t). Thus,

$$n(t) = \int_{\tau=0}^{\tau=\tau_{max}} dn(t,\tau) \tag{8}$$

where at $\tau_c < t \cdot \tau_{max} = \tau_c$, whereas at $\tau_c \geqslant t \cdot \tau_{max} = t$.

This convolution integral may be solved by trial to find U_b and T from time-of-arrival data if the shutter function $A(\tau)$ is known. The function $A(\tau)$ is best evaluated empirically by observing time-of-arrival signals at very slow shutter speeds, in our case at a rotational frequency for the modulator wheel of 1 Hz giving 2 beam pulses per second. Under these circumstances molecules of all velocities reach the detector at each increment of shutter opening and the time-of-arrival trace becomes a normalized representation of the shutter function. Results for our present system geometry are shown in Fig. 10.

Next we examine the time of arrival trace at higher modulator wheel speeds, in the present case at a speed of 400 beam pulses per second. A straightforward algorithm using Simpson's rule for the integration of Eq. (8) has been prepared for use on our system computer. Observed time-of-arrival/signal amplitude plot for the above modulator speed using nitrogen at 500 torr and 293 K in the reservoir is given in Fig. 11. On the other hand, times of arrival, using a temperature of 140 K and beam macroscopic velocity of 565 m/s were computed. The comparison between observed and calculated results is quite satisfactory. It is shown that the beam is fully supersonic, the equivalent Mach number being 2.34.

These preliminary results are, of course, subject to substantial change in the direction of lower beam temperatures and higher Mach numbers. Without question, however, the mass sampling apparatus has been shown by these measurements to function as a supersonic beam system, one which will accordingly support our projected studies.

REFERENCES

1. Deckers, J. and Van Tiggelen, A., "Ion Identification in Flames," Seventh Symposium (International) on Combustion, 1958, pp. 254-255, The Combustion Institute (1959).

2. Knuth, E. L., "Direct-Sampling Studies of Combustion Processes," Ch. 9 of Engine Emissions: Pollutant Formation and Measurement, G.S. Springer and D.J. Potter, Eds., Plenum Press (1971).

3. Milne, T. A. and Greene, F. T., "Mass Spectrometric Sampling of High Pressure-High Temperature Sources," Advances in Mass Spectrometry, Vol. 3, W.C. Mead, Ed., Elsevier, pp. 841-850 (1966).

4. Milne, T. A. and Greene, F. T., "Molecular Beams in High Temperature Chemistry" in Eyring, L., Ed., Advances in High Temperature Chemistry, Vol. 2, Academic Press (1969).

5. Biordi, J. C., "Investigating the Fundamental Chemistry of Flames with Molecular Beam Mass Spectrometry," Progress in Aeronautics and Astronautics, Vol. 53, AIAA. New York (1977).

6. Peeters, J. and Mahnen, G., "Reaction Mechanisms and Rate Constants of Elementary Steps in Methane-Oxygen Flames," Fourteenth Symposium (International) on Combustion, pp. 133-141, The Combustion Institute (1973).

7. Young, W. S., Wong,,Y. G., Rodgers, W. E. and Knuth, E. L. "Molecular-Beam Sampling of Gases in Engine Cylinders," pp. 281-289, Technology Utilization Ideas for the 70's and Beyond, American Astronautical Society, Tarzana (1971).

8. Sturtevant, B., "Application of a Magnetic Mass Spectrometer to Ionization Studies in Impure Shock Heated Argon," J. Fluid Mech. 15, pp. 641-655 (1966).

9. Lincoln, K. A. "Flash Vaporization of Solid Materials for Mass Spectrometry by Intense Thermal Radiation," Analytical Chemistry, Vol. 37, p. 451 (1965).

10. Lincoln, K. A., "A New Mass Spectrometer System for Investigating Laser Induced Vaporization Phenomena," Int. J. Mass Spectrometry and Ion Physics, 16, p. 191 (1974).

11. Milne, T. A., Descroziers, R. E. and Reed, T. B., "Biomass Thermal Conversion Research at SER I", Seri/TP-622-1139, Sept. 1980.

12. Oppenheim, A. K., "Prospects for Internal Combustion Engines Among Advanced Energy Conversion Systems," SAE Reprint #789652, The 13th Intersociety Energy Conversion Engineering Conference, Sept. 1978, Society of Automotive Engineers.

13. Oppenheim, A. K., Teichman, K., Horn, K. and Stewart, H. E., "Jet Ignition of an Ultra-Lean Mixture", SAE Reprint #780637, Passenger Car Meeting, June 1978, Society of Automotive Engineers.

14. Teichman, K. Y., "Study of Jet Ignition for Lean Mixtures," Department of Mechanical Engineering, University of California, Ph.D. Thesis, December 1978.

15. Cetegen, B. Teichman, K. Y., Weinberg, F. J., and Oppenheim, A. K., "Performance of a Plasma Jet Igniter," SAE Technical Paper #800042 (1980).

16. Bossel, U., Hurlbut, F. C. and Sherman, F. S., "Extraction of Molecular Beams from Nearly Inviscid Hypersonic Free Jets," pp. 945-949, Vol. II, Rarefied Gas Dynamics (Sixth Symposium), Academic Press (1969).

17. Ashkenas, H. and Sherman, F. S., "The Structure of Utilization of Supersonic Free Jets in Low Density Wind Tunnels," Rarefied Gas Dynamics, Vol. 2, J.D. de Leeuw, ed., Academic Press, pp. 84-105 (1966).

ACKNOWLEDGEMENT

This work was supported by the Office of Energy Research, Basic Energy Sciences Division of the U.S. Department of Energy under Contract No. W-7405-ENG-48.

FIGURE CAPTIONS

Fig. 1 Schematic Diagram of Control System

Fig. 2 Molecular Beam Mass Spectrometer System, Front View

Fig. 3 Molecular Beam Mass Spectrometer System, Side View

Fig. 4 Cross-Section Schematic, Diagram of the Apparatus

Fig. 5 Quartz Tip with the 60 Micron Diameter Orifice

Fig. 6 Details of Beam Modulation Pulse Generating Circuitry

Fig. 7 Details of the Particle Detector Signal Train
(a). Circuit of LH033CG Buffer Amplifier
(b). Circuit of the NE5539 Video Amplifier
(c). Details of the Time Constant Circuit and Additional LH0032CG Amplifier

Fig. 8 Experimental Set-up for the Time of Flight Measurement

Fig. 9 Time of Flight Schematic Diagram

Fig. 10 Experimental Plot of the Shutter Function
Nitrogen beam at a pressure of 500 torr
Chopping speed: 2 pulses per second
Normalized distance between orifice and skimmer: X/d = 60

Fig. 11 Experimental Plot of the Time of Arrival Record
Nitrogen beam at a pressure of 500 torr
Chopping speed: 400 pulses per second
Normalized distance between orifice and skimmer: X/d = 60

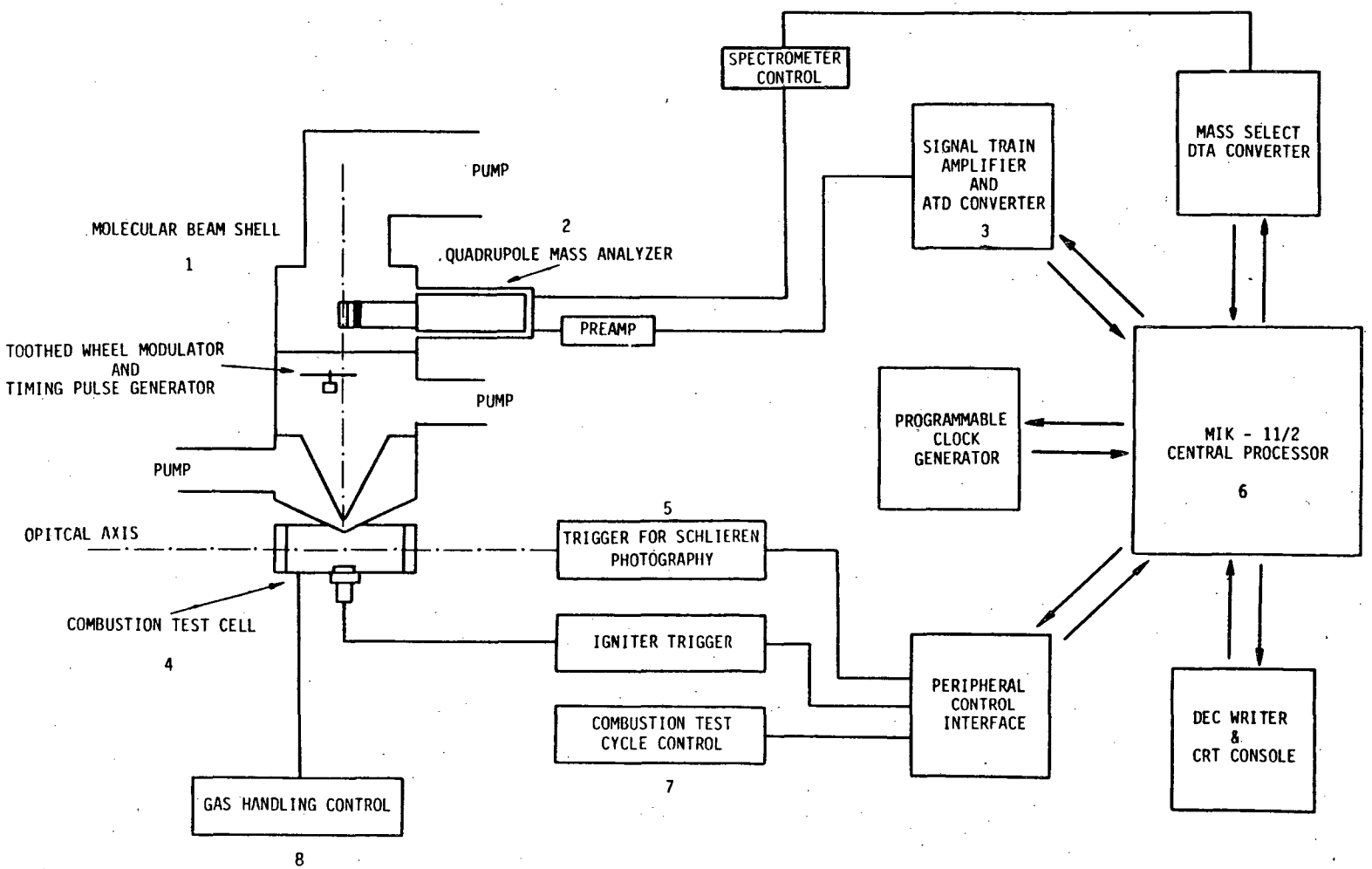

Fig. 1

XBL 818-11328

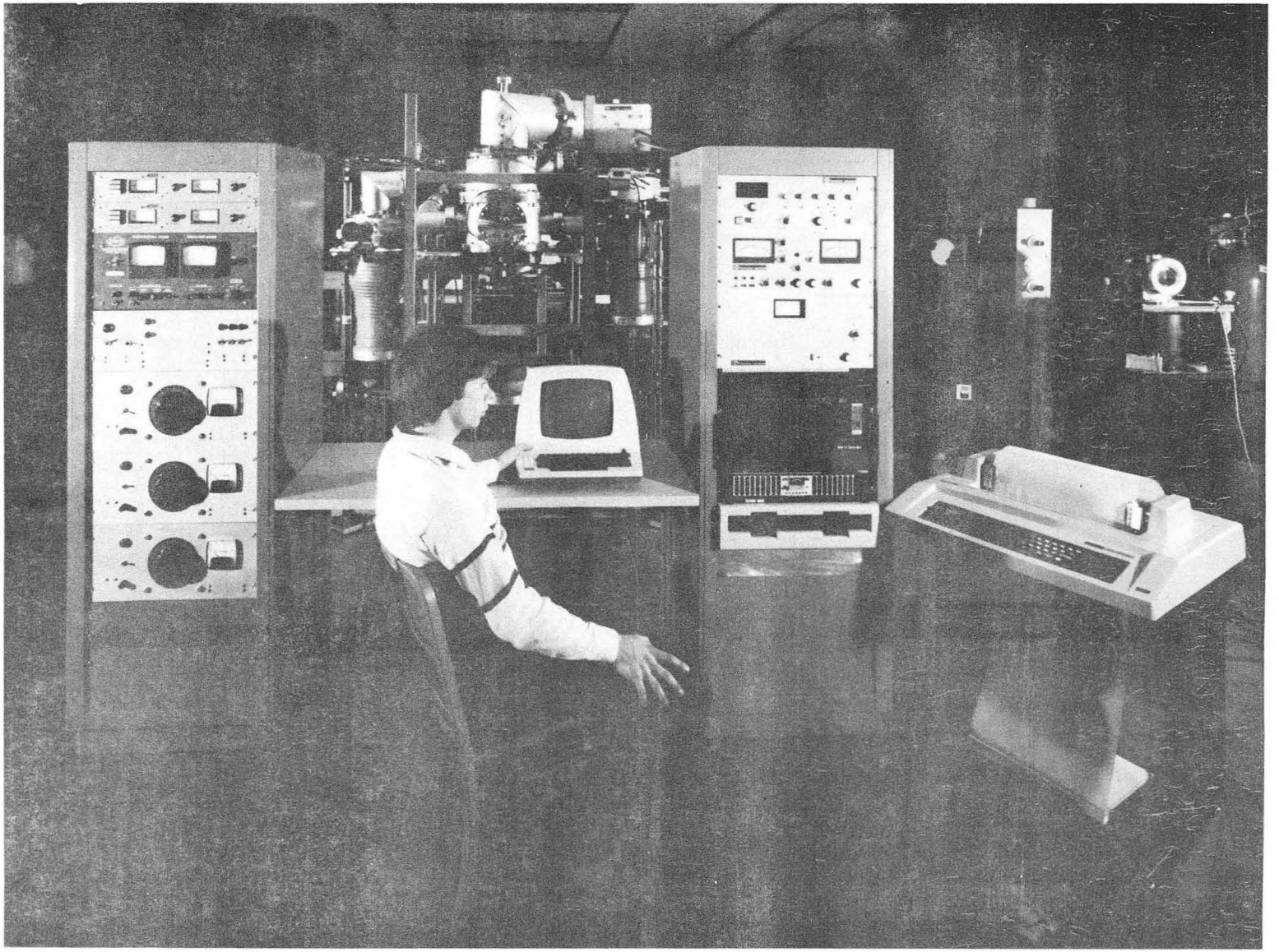

Figure 2 CBB 803-3319

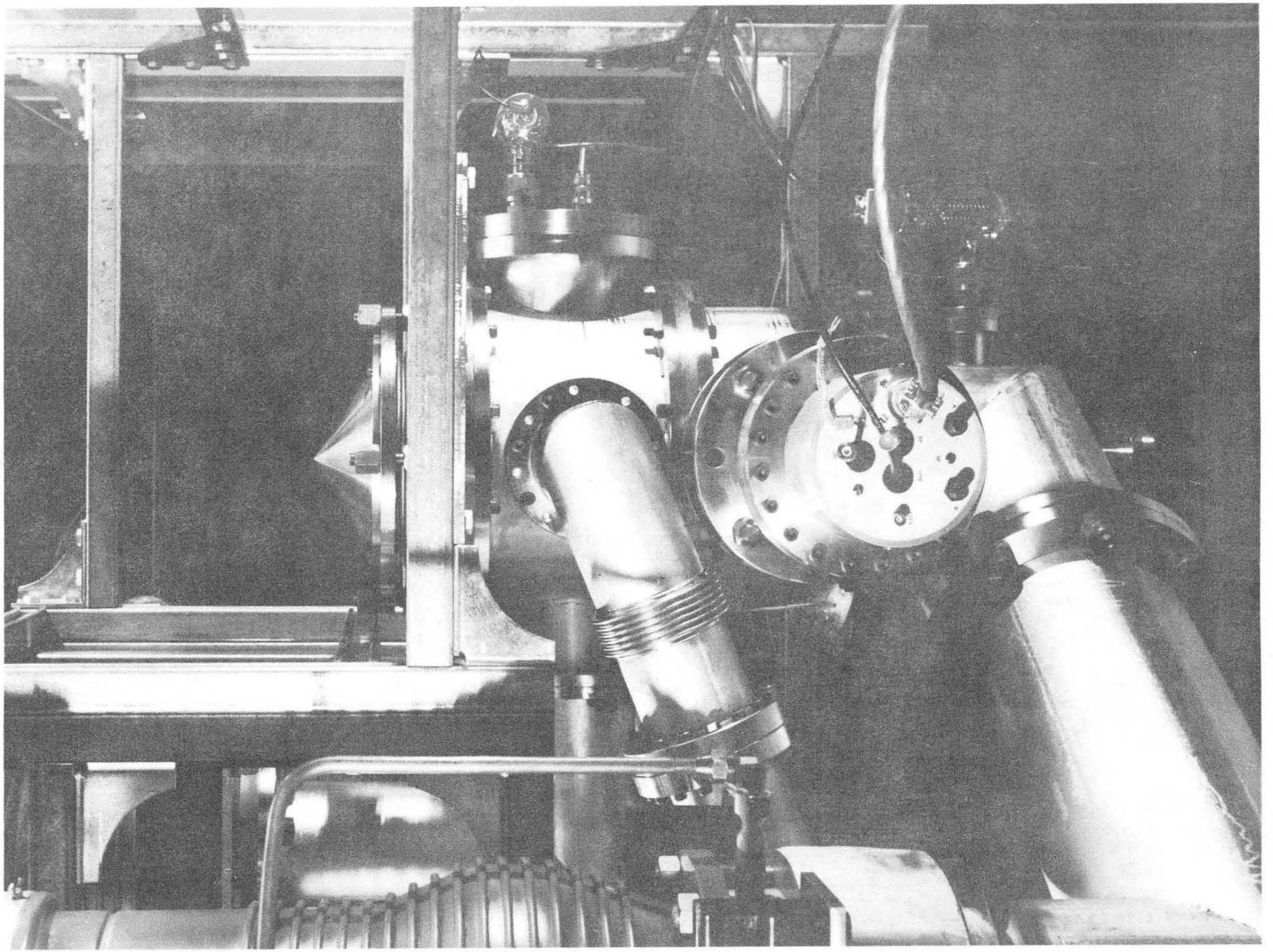

Figure 3 CBB 803-3317

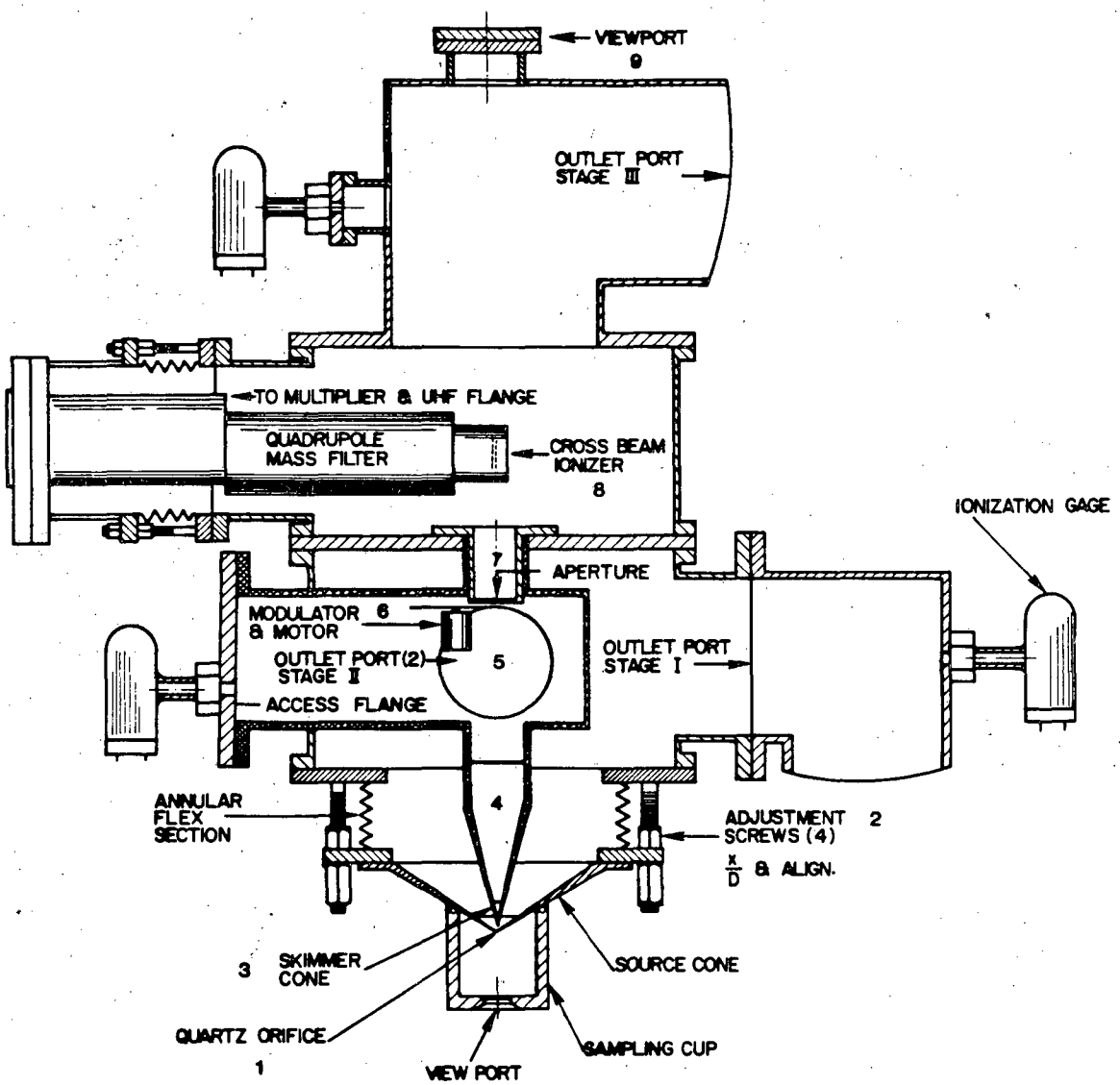

Fig. 4

XBL 818-11329

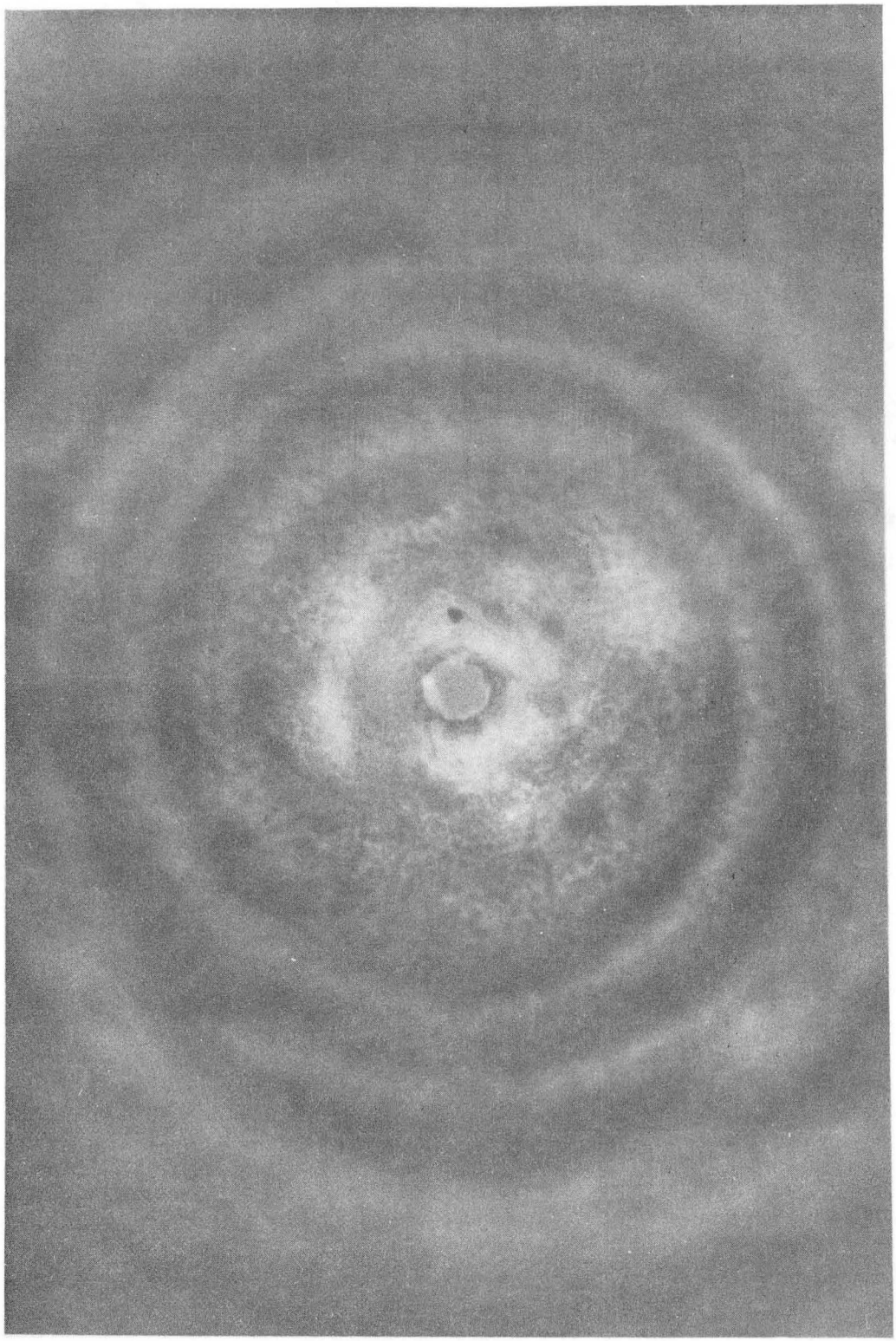

Figure 5 CBB 812-1907

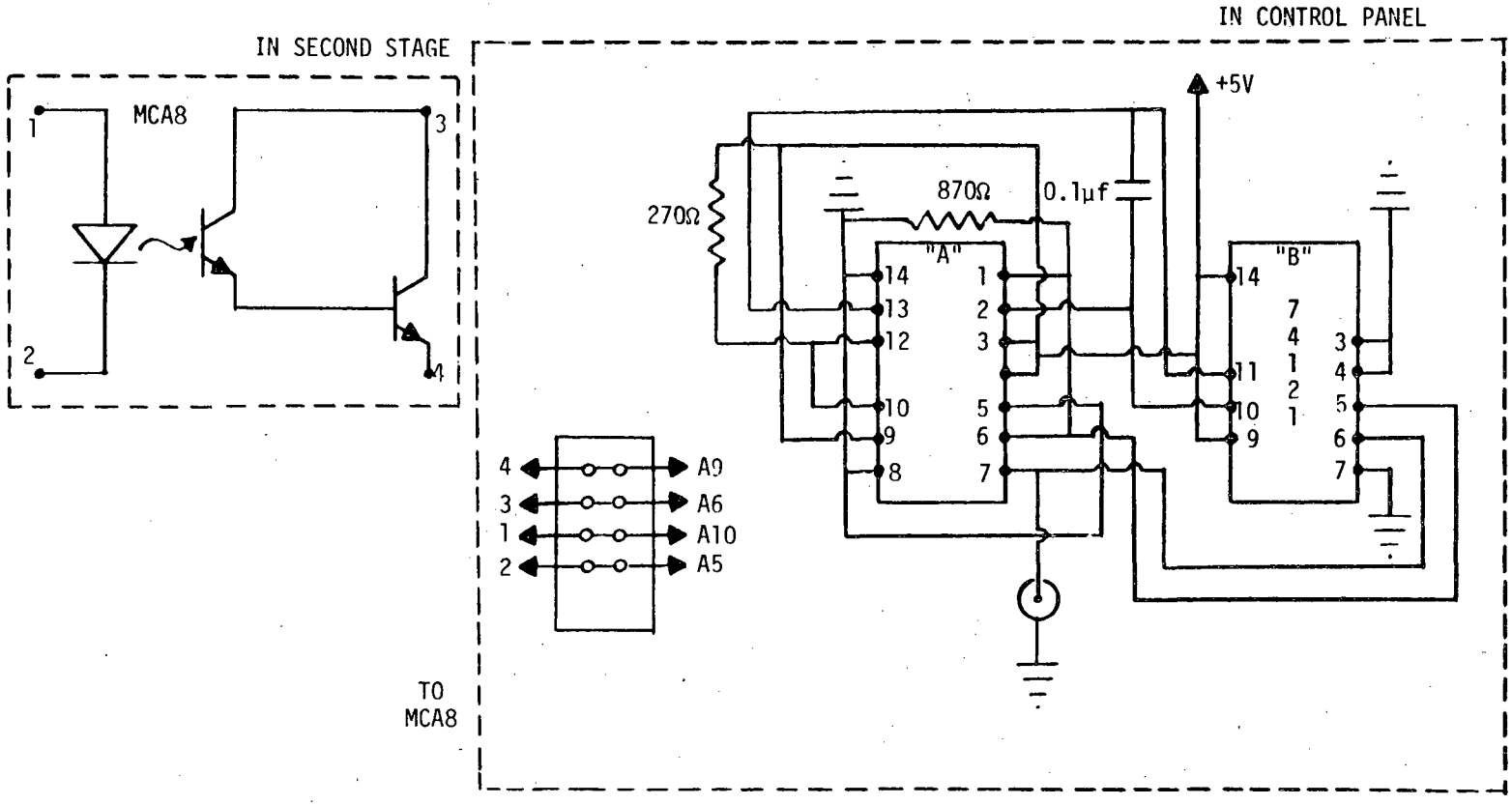

Fig. 6

XBL 818-11330

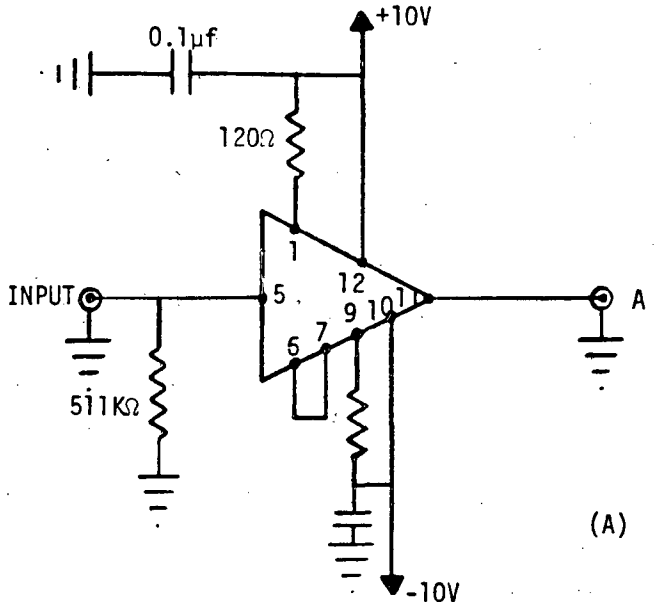

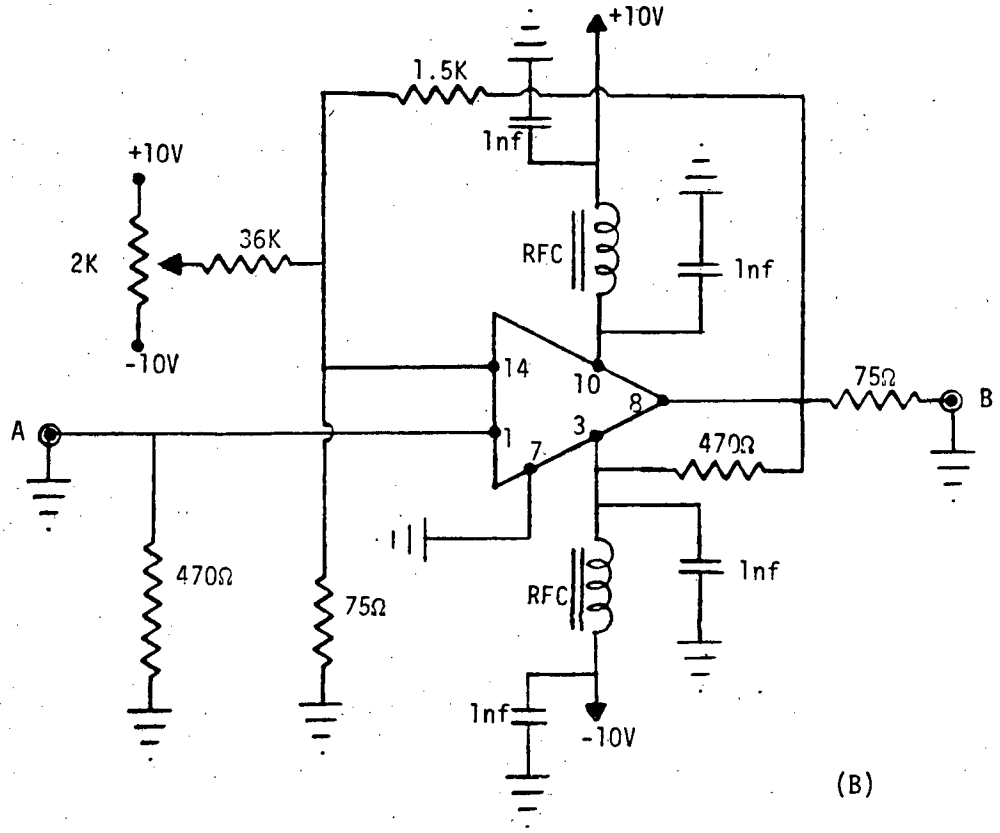

Figs. 7A & B

XBL 818-11331

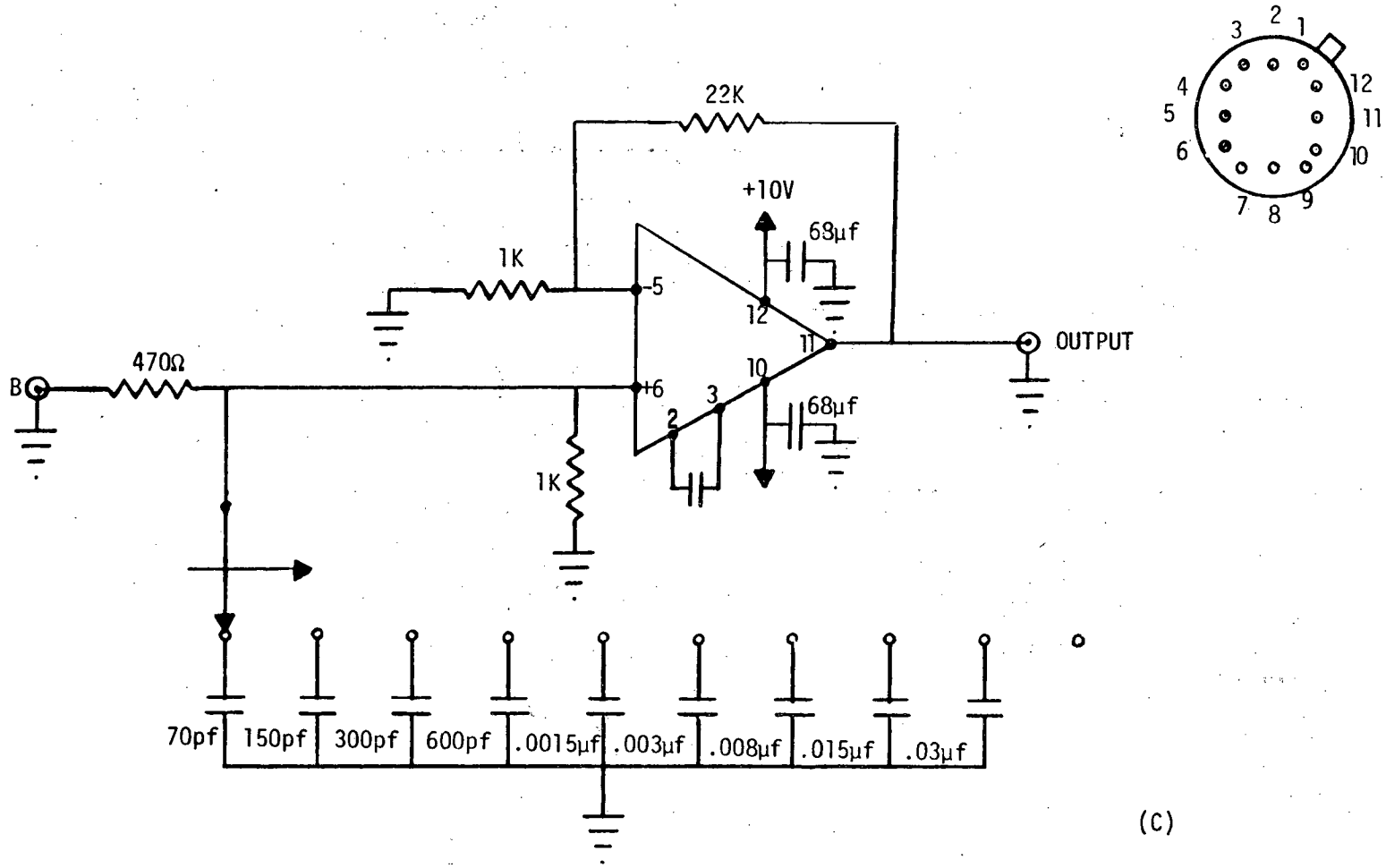

(C)

Fig. 7C

XBL 818-11332

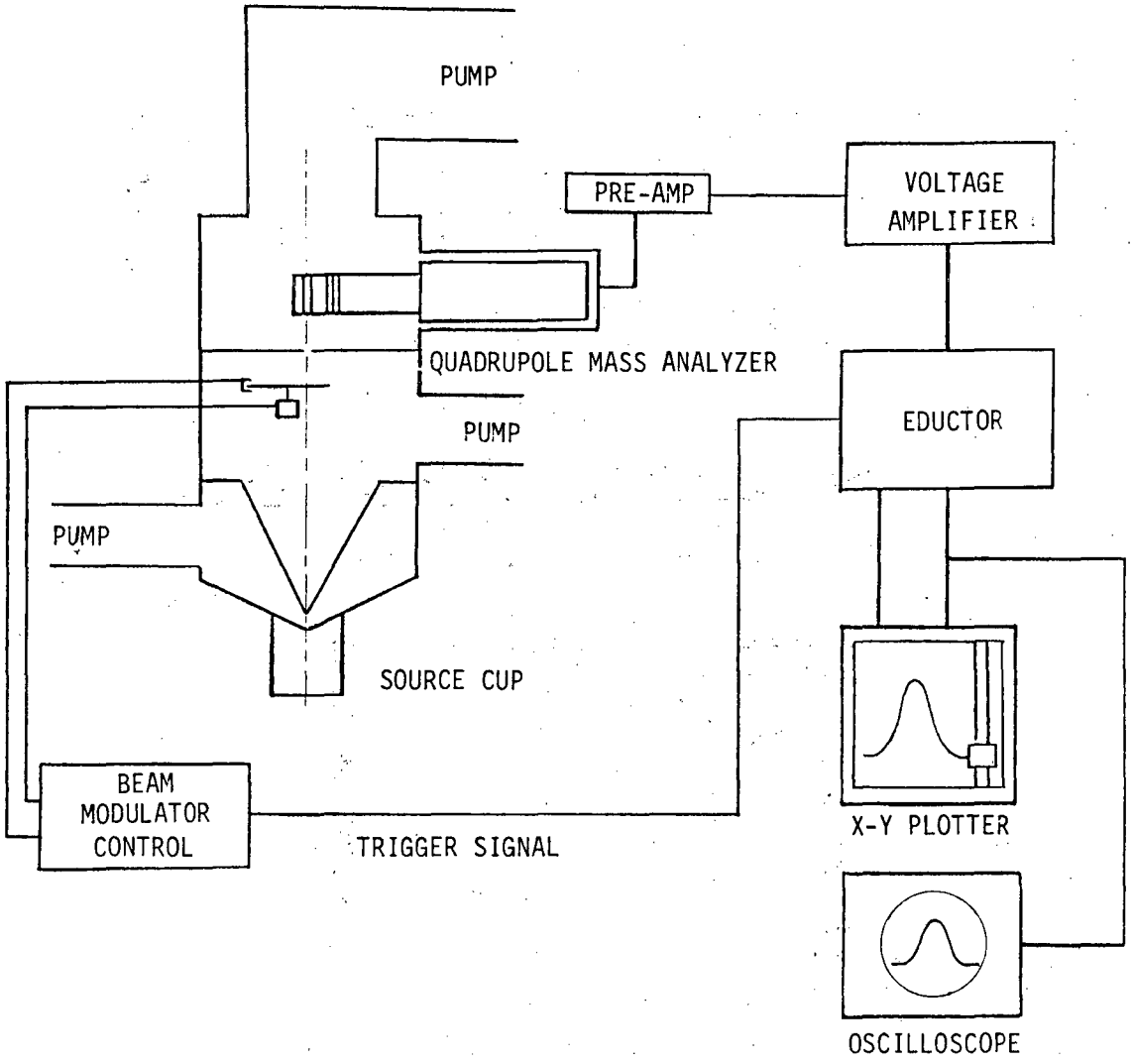

Fig. 8

XBL 818-11333

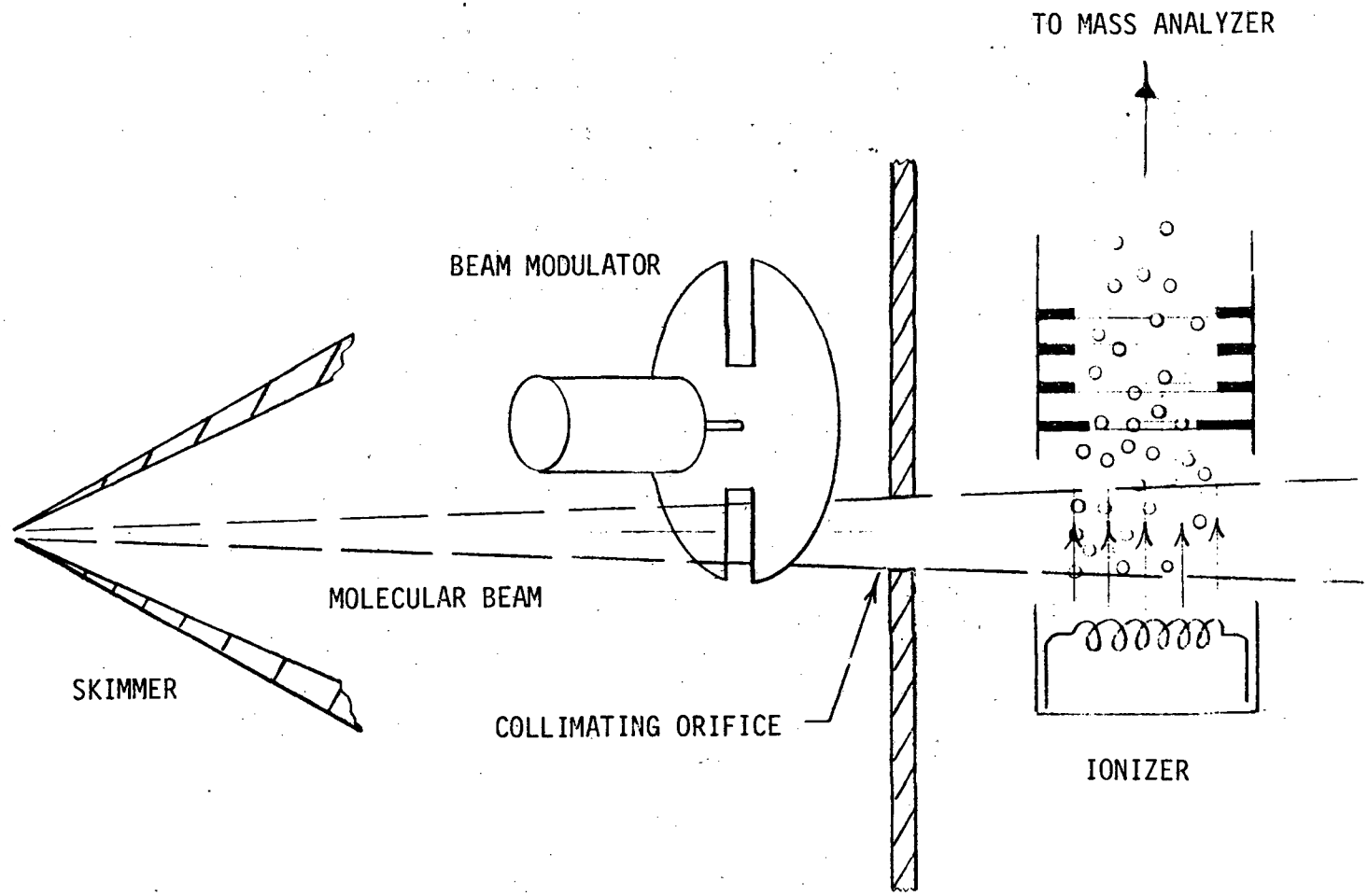

Fig. 9

XBL 818-11334

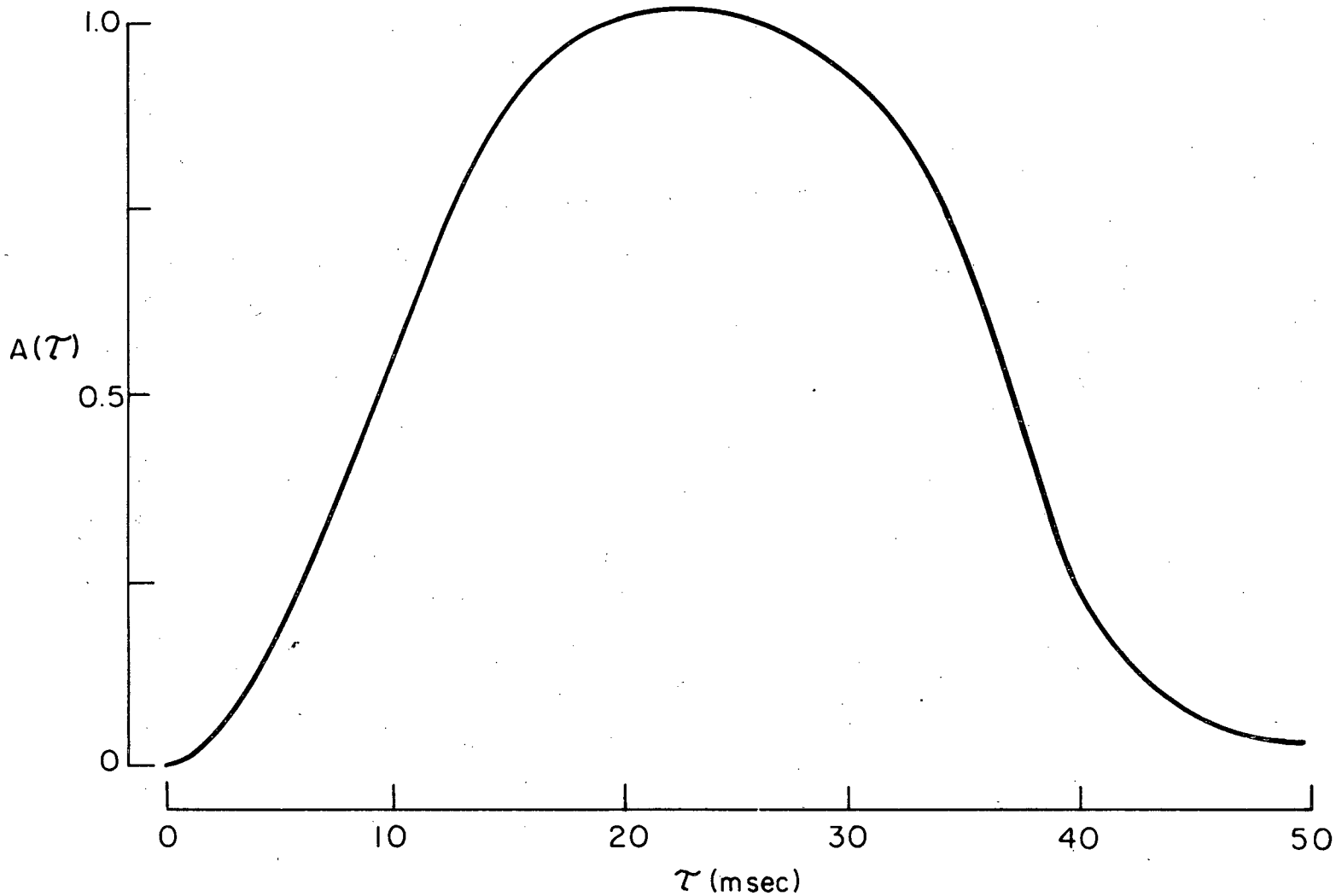

Fig. 10

XBL 818-11335

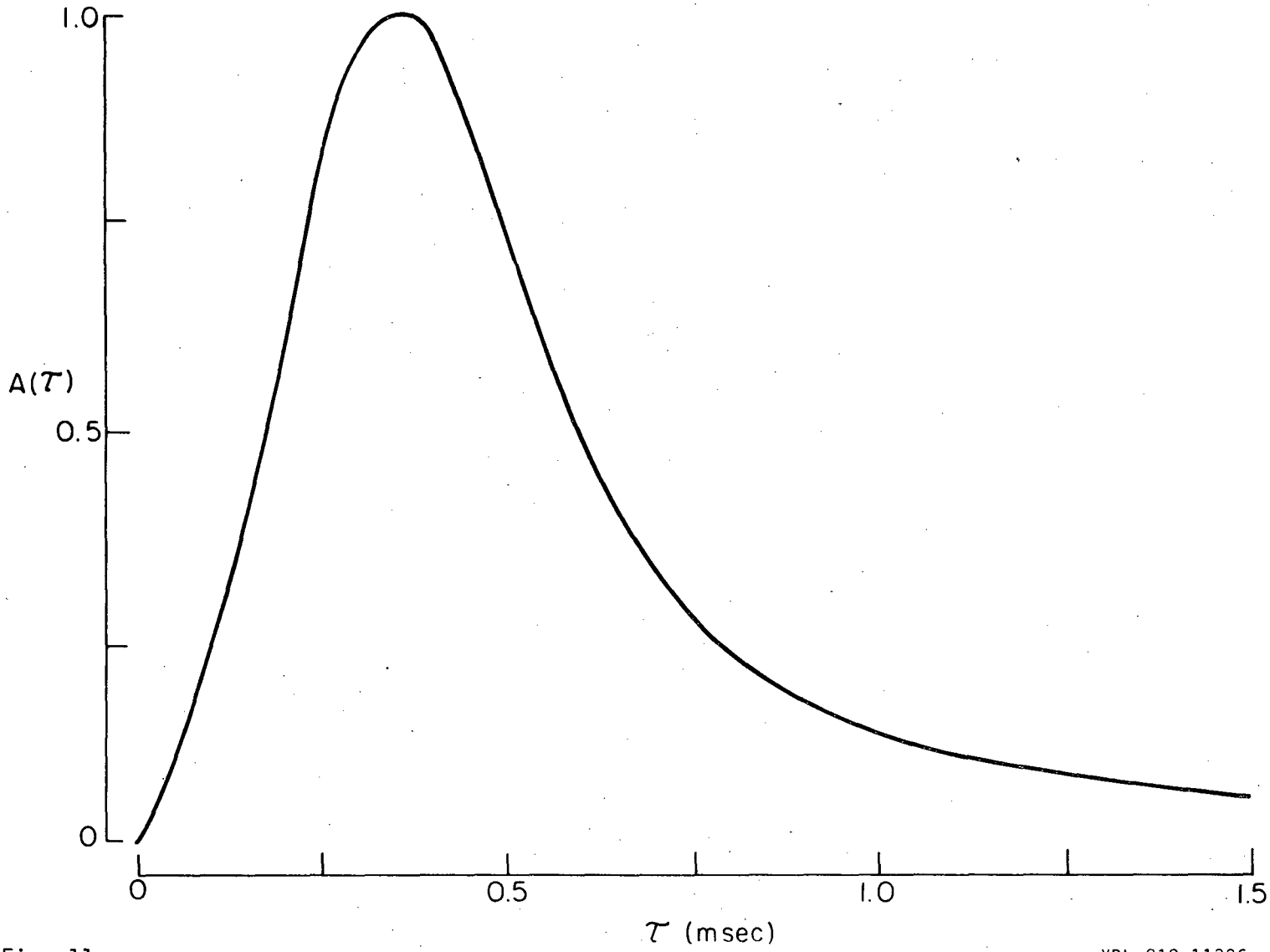

Fig. 11

XBL 818-11336

This report was done with support from the Department of Energy. Any conclusions or opinions expressed in this report represent solely those of the author(s) and not necessarily those of The Regents of the University of California, the Lawrence Berkeley Laboratory or the Department of Energy.

Reference to a company or product name does not imply approval or recommendation of the product by the University of California or the U.S. Department of Energy to the exclusion of others that may be suitable.

TECHNICAL INFORMATION DEPARTMENT
LAWRENCE BERKELEY LABORATORY
UNIVERSITY OF CALIFORNIA
BERKELEY, CALIFORNIA 94720