LBL-13180 1/2
Preprint c.2

Lawrence Berkeley Laboratory
UNIVERSITY OF CALIFORNIA

Physics, Computer Science & Mathematics Division

RECEIVED
LAWRENCE
BERKELEY LABORATORY

OCT 13 1981

LIBRARY AND
DOCUMENTS SECTION

Submitted for Publication

LONGITUDINAL STABILITY OF A PARTICLE BEAM IN THE PRESENCE OF RESONANT CAVITIES - PART I

Robert L. Warnock, George R. Bart,
and Stanley Fenster

August 1981

TWO-WEEK LOAN COPY

This is a Library Circulating Copy which may be borrowed for two weeks. For a personal retention copy, call Tech. Info. Division, Ext. 6782

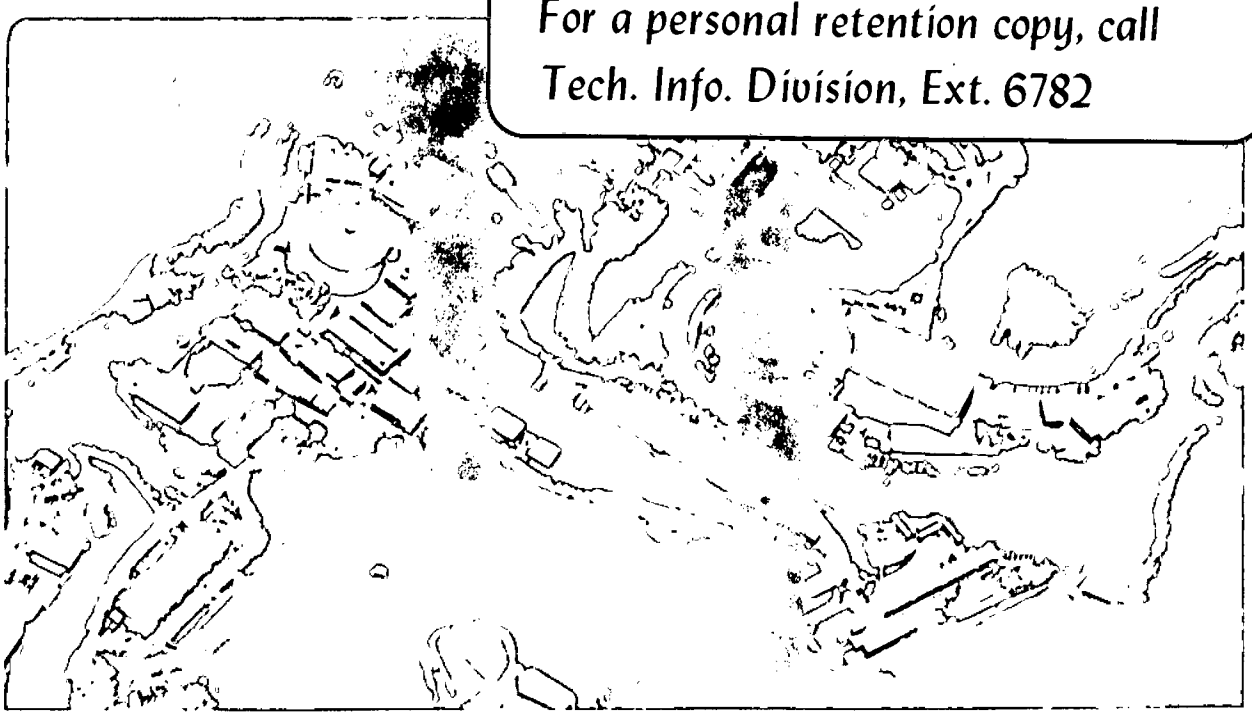

Prepared for the U.S. Department of Energy under Contract W-7405-ENG-48

LBL-13180 1/2 c.2

DISCLAIMER

This document was prepared as an account of work sponsored by the United States Government. While this document is believed to contain correct information, neither the United States Government nor any agency thereof, nor the Regents of the University of California, nor any of their employees, makes any warranty, express or implied, or assumes any legal responsibility for the accuracy, completeness, or usefulness of any information, apparatus, product, or process disclosed, or represents that its use would not infringe privately owned rights. Reference herein to any specific commercial product, process, or service by its trade name, trademark, manufacturer, or otherwise, does not necessarily constitute or imply its endorsement, recommendation, or favoring by the United States Government or any agency thereof, or the Regents of the University of California. The views and opinions of authors expressed herein do not necessarily state or reflect those of the United States Government or any agency thereof or the Regents of the University of California.

LONGITUDINAL STABILITY OF A PARTICLE BEAM IN THE PRESENCE OF RESONANT CAVITIES

PART I

Robert L. Warnock*

Lawrence Berkeley Laboratory
University of California
Berkeley, CA 94720

George R. Bart

Truman College
Chicago, Illinois 60640

Stanley Fenster†

Argonne National Laboratory
Argonne, Illinois 60639

* Participating guest. Work supported by the Director, Office of Energy Research, Office of High Energy and Nuclear Physics, Division of High Energy Physics of the U. S. Department of Energy under Contract No. W-7405-ENG-48.

† Work supported by the U. S. Department of Energy.

ABSTRACT

Unavoidable widenings of the vacuum chamber in an accelerator or storage ring may function as resonant cavities and thereby promote instabilities of the beam. A formalism for computing rise times of longitudinal instabilities is presented, for the case of a coasting beam. With a particular model of the vacuum chamber, a system of equations for Fourier coefficients of the electric field is derived from the linearized Maxwell-Vlasov equations. Use of a nonharmonic Fourier series allows a complete treatment of resistive-wall boundary conditions. The kernel matrix of the system is given by a slowly converging series, which is subjected to a Watson-Sommerfeld transformation to improve the rate of convergence. The transformed series permits efficient numerical computation of rise times for virtually any choice of geometrical parameters. Part II contains numerical solutions and physical discussions of the equations. In the case of fairly deep cavities, the coupling impedance is obtained by a rapidly convergent perturbation method that avoids numerical solution of large sets of equations. Part III takes up mathematical questions concerning convergence and truncation of the infinite system.

1.1 INTRODUCTION

A beam in an accelerator or storage ring may be strongly affected by variations in the vacuum chamber cross section. Regions of substantial widening can function as high-Q resonant cavities. As was shown by Laslett, Neil and Sessler[1] in 1961, longitudinal instability of a coasting beam may occur when a high harmonic of the particle revolution frequency is nearly equal to the resonant frequency of such a cavity. If a longitudinal perturbation of charge density has a Fourier component with frequency near the cavity resonance ω_r, then there will be a charge density wave with wave number $k = n/R$ (R = ring radius) having phase velocity ω_r/k close to the average particle velocity βc. The cavity sees this wave as a source oscillating near its resonant frequency, which excites a large resonant field that can act on the beam with the proper phase to cause a longitudinal instability. The latter may be manifested as spontaneous modulation of charge density in an initially uniform beam. For minimum rise time of the instability, ω_r/k is equal to βc plus a small shift that depends on several accelerator parameters. Because of periodicity the mode number n is an integer, and the condition $\omega_r/k \approx \beta c$ is the statement that ω_r be near the n-th harmonic of the revolution frequency: $\omega_r \approx n\Omega = n\beta c/R$. For a cylindrical cavity of radius d, the fundamental resonance is at $\omega_r = j_{01}c/d$, where $j_{01} \approx 2.4$ is the first zero of the Bessel function J_o. In typical cases the harmonic n is quite high, perhaps $n = j_{01}R/d\beta \sim 10^3$, and the resonant frequency $\omega_r/2\pi$ is 10^8-10^9 Hz.

Unstable behavior is favored by a high Q factor of the cavities, as well as by high current density and small velocity spread. Also, the rise

time of an instability depends on the transit time factor, which is a sensitive function of geometric parameters. Because the unstable mode number n is so high, a small change in average velocity βc can change the mode number by one unit. If the cavity resonances are very narrow, as is the case for metallic cavity walls, there will be a rapid variation of the rise time of an instability as βc is varied enough to change n by one unit.

An important problem in accelerator design is to delineate the range of parameters for which the growth time of such instabilities will be long enough to be acceptable. The set of parameters includes geometric dimensions, wall conductivity, current density, and the velocity distribution. The problem was studied carefully by Keil and Zotter[2,3] for the particular model of the vacuum chamber shown in Fig. 1; namely, a straight, infinite, cylindrical pipe of radius b, which widens abruptly to a cylinder of radius d and length 2g (length g in the notation of Ref. 2). The widenings appear with period $2\pi R$ in the longitudinal distance z, so that the picture can be viewed as an approximation to a circular accelerator ring with large ring radius R, having just one widened segment of mean arc length 2g. The model has resistive cylindrical walls, but perfectly conducting cavity end walls. Keil and Zotter computed the longitudinal coupling impedance, which summarizes the effect of the conductors surrounding the beam, and is the quantity required for computation of the rise time of an unstable perturbation through solution of the plasma dispersion relation.

Our purpose in this series of papers is to make certain improvements in the treatment of Keil and Zotter, so as to enhance computational efficiency and develop physical insights. We also treat mathematical questions concerning convergence and truncation of the infinite set of equations for field coefficients. We achieve substantial savings of computational effort in a scheme which emphasizes the physics of resonant cavities and allows firm control of truncation errors. Our model of the vacuum chamber is the same as that of Ref. 2, except that the planar cavity end walls have finite conductivity. The techniques introduced might aid in the study of more elaborate models; for instance, chambers with reentrant cavities, two or more cavities per period, off-center beams, and so on. Our discussion has the following new features.

(1) Adapting the standard Landau theory of plasma oscillations,[4] we apply linearized Maxwell-Vlasov equations under resistive wall boundary conditions. The usual description of the system in terms of a single coupling impedance emerges as an approximation which is not universally valid. The generally valid description entails an impedance matrix rather than a single impedance, owing to the fact that Fourier modes of the fields are not eigenmodes of the full system with tube corrugations. A case requiring a 2×2 impedance matrix is that in which a cavity resonance frequency lies in the middle between two adjacent harmonics of the revolution frequency.

(2) We derive a system of equations for the Fourier coefficients of the electric field in the cavity region, which is closely related to the system employed by Keil and Zotter but has some technical

advantages. The kernel matrix of the system is given by an infinite series, which unfortunately is difficult to compute owing to the fact that the summand has a maximum far out in the series. This difficulty is severe when the ring radius R is large. Accordingly, Keil and Zotter did their calculations for a value of R that is too small for many cases of interest. We avoid the difficulty by performing a Watson-Sommerfeld transformation of the series, which converts it to a series with an essentially positive monotonically decreasing summand. The latter is easily computed for any values of geometrical parameters.

(3) The Watson-Sommerfeld transformation has the further advantage of revealing how the equations behave for small b/d, a limit not discussed in Ref. 2. In the limit $b/d \to 0$, $a/b \to$ constant, one obtains the analytically soluble problem of a simple cylindrical cavity traversed by a line charge. We develop a perturbation method which takes the simple cavity solution as a starting point, and converges rapidly for moderately large values of b/d. The technique avoids numerical solution of large systems of equations, and is our preferred method of computing the coupling impedance and rise time for an important range of parameters. The perturbation method is derived by eliminating the resonant mode from the equations. Such an elimination is useful even when the perturbation method is not employed.

(4) We account for resistivity of the cavity end walls, which is quantitatively important, by using a non-harmonic Fourier series. The extra numerical effort required is negligible, once the appropriate equations have been derived.

(5) We explore the mathematical status of the infinite system of equations for cavity field coefficients, and develop a method to control

the error in the finite-dimensional truncation used for numerical work. We find that the equations can be transformed so that Fredholm theory becomes applicable; (Fredholm theory in a Banach space of discrete sequences, rather than the usual theory of integral equations). For numerical work we use analytical results on high mode number behavior together with a mapping and interpolation technique based on spline functions. We thereby approximate the tail of every infinite sum, instead of merely throwing it away.

(6) In solving the dispersion relation to find the rise time of an instability we account for the rapid variation of the coupling impedance near a cavity resonance. Although that variation is usually ignored, it leads in fact to a rapid variation of rise time with average particle velocity (and with other accelerator parameters).

A short summary of our formalism and some numerical results are given in Ref. 5.

1.2 RELATED WORK

Month and Peierls[6] also reexamined the equations of Keil and Zotter, using a Watson-Sommerfeld transformation. Their use of the transformation is completely different from ours, however, in that they transform the solution of the equations for field coefficients, rather than the kernel. Consequently, they have to assume analyticity properties of an unknown function, and that makes the results difficult to evaluate. In our case the function is known and the transformation is rigorously justified.

In an interesting paper Keil and Messerschmid[7] studied nonlinear effects in the longitudinal stability of a coasting beam by means of numerical simulation. They find that the linear theory gives a good first approximation, but find interesting behavior of the velocity spread in the nonlinear saturation of instability.

Measurements on destabilizing effects of vacuum chamber cross-section variations have been performed at the ISR.[8,9] A special experimental cavity placed around the ISR beam was used to study longitudinal stability of a coasting beam;[9] theoretical estimates of thresholds for instability were found to be valid. Stability of bunched beams has been the topic of many experimental and theoretical investigations. For a recent review emphasizing design considerations see Hofmann.[10]

Calculations of coupling impedance for models different from that of Ref. 2 have been done by several authors. Hahn and Zatz[11] treat single and double step discontinuities of cross section in a circular

tube, without periodicity. Hereward[12] considered a single step in a rectangular tube. Kriegler, Mills, and van Bladel,[13] and also Trickett,[14] studied a reentrant cavity (annulus coupled to the main tube through a slot). Chatard-Moulin and Papiernik[15] treated an arbitrary small periodic modulation of tube radius. Their method was applied by Krinsky[16] and by Cooper and Morton,[17] and was reformulated by Krinsky and Gluckstern.[18] Sessler[19] gave a general review of the effects of beam surroundings on stability, listing further references. Related problems of wave propagation in corrugated wave guides have received much attention in the engineering literature.[20]

1.3 CONTENTS OF PART I

The task of the present Part I is to set up the basic equations which are to be analyzed, solved, and discussed physically in Parts II and III.

Section 2 is concerned with linearization of the Vlasov equation (a step which requires careful interpretation in the present case), and Laplace and Fourier transforms of the linear Vlasov-Maxwell system.

Section 3 contains the derivation of equations for Laplace-Fourier coefficients of field perturbations due to a prescribed charge-current perturbation. The discussion parallels that of Ref. 2, but has been generalized to allow arbitrary charge-current perturbations, resistive cavity end walls, and initial-value terms arising from the Laplace transform in time. Most of the details on initial-value terms are found in two appendices.

In Section 4 the Vlasov equation is combined with the electromagnetic equations of Section 3 to give "self-consistent" equations in which the perturbed charge-current does not appear. The general equations determining growth times of unstable perturbations are stated, and the description in terms of a single coupling impedance is derived as an approximation.

Section 5 contains the Watson-Sommerfeld transformation of the equations for cavity field coefficients, which is the main new result of practical importance in calculations.

2. LAPLACE AND FOURIER TRANSFORMS OF MAXWELL-VLASOV EQUATIONS

We take the axis of the tube to be the z-axis with the origin at a cavity centroid; the ends of the cavities then lie in the planes $z = 2\pi nR \pm g$, where n is any integer. The particle distribution function, $u(\underline{r}, \underline{v}, t)$, is presumed to obey the Vlasov equation,

$$\frac{\partial u}{\partial t} + \underline{v} \cdot \frac{\partial u}{\partial \underline{r}} + \frac{q}{M} (\underline{E} + \underline{v} \times \underline{B}) \cdot \frac{\partial u}{\partial \underline{v}} = 0. \tag{2.1}$$

We suppose that u has the form[21]

$$u(\underline{r}, \underline{v}, t) = \theta(a - r)\, \delta(v_x)\, \delta(v_y) [f_o(v_z) + f_1(z, v_z, t)] \tag{2.2}$$

where θ is the unit step function, and δ is understood as a smooth but sharply peaked even function approximating the Dirac delta function. Thus, charge and current are spatially uniform over a cross section of the beam, within the beam radius a. On the average, particles move only in the z direction. If we substitute (2.2) in (2.1) and evaluate the equation at $\underline{r} = (0, 0, z)$, $\underline{v} = (0, 0, v)$, the result is

$$\left(\frac{\partial}{\partial t} + v \frac{\partial}{\partial z}\right) f_1(z, v, t) + \frac{q}{M} E_z(z, t) \frac{\partial}{\partial v} [f_o(v) + f_1(z, v, t)] = 0. \tag{2.3}$$

We wish to linearize (2.3) about the configuration corresponding to f_o. Accordingly we write the electric field as

$$\underline{E}(\underline{r}, t) = \underline{E}_o(\underline{r}) + \underline{E}_1(\underline{r}, t), \tag{2.4}$$

where $\underline{E}_o$ and $\underline{E}_1$ correspond to charge-current densities (ρ_o, J_o) and (ρ_1, J_1) defined as follows:

$$\rho_o(\underline{r}) + \rho_1(\underline{r}, t) = \theta(a - r) q \int_{-\infty}^{\infty} [f_o(v) + f_1(v, z, t)] dv, \tag{2.5}$$

$$J_o(\underline{r}) + J_1(\underline{r}, t) = \theta(a - r) q \int_{-\infty}^{\infty} v [f_o(v) + f_1(v, z, t)] dv. \tag{2.6}$$

We emphasize that both $\underline{E}_o$ and $\underline{E}_1$ correspond to the same boundary conditions, those for the corrugated tube with resistive walls.

At points on the axis sufficiently far from the cavity ends the field lines of $\underline{E}_o$ leave the axis almost exactly in the radial direction, so that E_{oz} on the axis is negligible. At points nearly adjacent to the cavity ends, E_{oz} on the axis will be nonzero but small; the field lines must bend around to meet the cavity ends at nearly normal incidence. For the linearization we treat E_{oz} on axis as a first order quantity, even though it is formally of zeroth order. The accuracy of this procedure could be judged by solving the boundary value problem which determines E_{oz}, using methods like those developed in the following. When second-order quantities are dropped, equation (2.3) takes the form

$$\left(\frac{\partial}{\partial t} + v \frac{\partial}{\partial z}\right) f_1(z, v, t) + \frac{q}{M} E_{z1}(z, t)\, f_o'(v) = -\frac{q}{M} E_{zo}(z) f_o'(v). \tag{2.7}$$

This equation is to be solved together with the Maxwell equations and boundary conditions for $\underline{E}_1$ and $\underline{B}_1$, with sources (ρ_1, J_1) given by (2.5) and (2.6). Thus we have a linear system to determine $(f_1, \underline{E}_1, \underline{B}_1)$ in terms of f_o, E_{zo}, and the initial values $(f_1, \underline{E}_1, \underline{B}_1)_{t=0}$. We need not

actually specify E_{zo} and the initial values, since the rise time of an unstable perturbation turns out not to involve those time-independent quantities.

Of course, we ignore completely the implications of the Vlasov equation (2.1) at points off the z-axis, as befits the approximation of one-dimensional motion.

Before proceeding to the Maxwell equations, some comments are in order. Generalizing the theory of Landau damping[4], we begin at $t = 0$ with an arbitrary small perturbation, $(f_1, \underline{E}_1, \underline{B}_1)_{t=0}$, of the uniform beam configuration, $(f_o, \underline{E}_o)$, and ask how that perturbation evolves in time. We can never expect that the perturbation will decay to zero, even if parameters are such that the beam is actually stable, because $(f_o, \underline{E}_o)$ is not an exact steady-state solution of the nonlinear Maxwell-Vlasov system. Indeed, if $f_1 = 0$ and $\underline{E}_1 = 0$, then (2.3) reduces to the false equation $E_{zo}(z)\, f_o'(v) = 0$. Clearly, a steady state solution must have some variation of charge density in the z-direction, to account for the presence of the cavities. A rigorous discussion of stability would have to proceed by first finding an exact steady-state solution of the nonlinear system. Linearization about that solution would then decide the question of stability.

As time passes, the perturbed field $\underline{E}_1$, as computed from the linearized equations above, will either (i) increase in magnitude indefinitely or (ii) tend to a constant. (There is also the mathematical possibility that $\underline{E}_1$ could oscillate indefinitely without approaching a limit, but that would not seem to make sense physically.) We interpret

case (i) as instability and (ii) as stability, while emphasizing that the interpretation is plausible but not rigorously justified. Since the configuration $(f_o, \underline{E}_o)$ about which we linearize is already a perturbation of the true stationary configuration $(f^{(o)}, \underline{E}^{(o)})$ (supposed to exist), the true initial perturbation of the stationary state is

$$(f_o + f_1 - f^{(o)},\ \underline{E}_o + \underline{E}_1 - \underline{E}^{(o)},\ \underline{B}_1)_{t=0}. \tag{2.8}$$

Our interpretation of an increasing $\underline{E}_1$ as instability could be wrong if the beam were actually stable to a <u>sufficiently small</u> perturbation, but not to one as large as the "minimum" perturbation that we are able to treat theoretically, the latter being

$$(f_o - f^{(o)},\ \underline{E}_o - \underline{E}^{(o)},\ 0). \tag{2.9}$$

The distribution function is to be normalized so that

$$\pi a^2 \int_{z_o}^{z_o+2\pi R} dz \int_{-\infty}^{\infty} dv\, f(z, v, t) = N, \tag{2.10}$$

where N is the average number of particles in the interval $z_o < z < z_o + 2\pi R$. We shall impose periodicity of f in z through a Fourier development, so that N will be independent of z_o. To maintain (2.10) in the linearized formalism, we first take $f_o(v)$ to satisfy (2.10) by itself:

$$(\pi a^2)(2\pi R) \int_{-\infty}^{\infty} dv\, f_o(v) = N. \tag{2.11}$$

Next, we choose the initial value of f_1, which is arbitrary, so that

$$\int_{z_o}^{z_o+2\pi R} dz \int_{-\infty}^{\infty} dv\, f_1(z, v, 0) = 0. \tag{2.12}$$

For instance, condition (2.12) is satisfied if there is no constant term in the Fourier series for f_1 at time 0:

$$f_1(z, v, 0) = \sum_{n\neq 0} \hat{f}_{1n}(v, 0) \exp(in\, z/R). \tag{2.13}$$

Now $f = f_o + f_1$ satisfies (2.10) at time 0, and the linearized equation (2.7) then implies that f satisfies (2.10) for all time. Also, the linearized equation implies that the continuity equation holds for all z and t:

$$\frac{\partial \rho}{\partial t} + \frac{\partial J}{\partial z} = 0. \tag{2.14}$$

We next state the Maxwell equations for perturbed fields $\underline{E}_1$ and $\underline{B}_1 = \mu_o \underline{H}_1$ with sources ρ_1, J_1 given by (2.5) and (2.6). We take cylindrical coordinates (z, r, ϕ), and look only for solutions independent of ϕ. Higher modes depending on ϕ are believed to have relatively little effect on stability, but perhaps should be investigated at a later stage. Henceforth we suppress the subscript 1 denoting perturbations, and write the axially symmetric equations for perturbed fields of the transverse magnetic (TM) mode as follows:

$$\frac{1}{r}\frac{\partial}{\partial r}(r\, E_r) + \frac{\partial E_z}{\partial z} = \frac{\rho}{\varepsilon_o} \tag{2.15}$$

$$\frac{\partial E_r}{\partial z} - \frac{\partial E_z}{\partial r} = -\mu_o \frac{\partial H_\phi}{\partial t} \tag{2.16}$$

$$\frac{\partial H_\phi}{\partial z} = -\varepsilon_o \frac{\partial E_r}{\partial t} \tag{2.17}$$

$$\frac{1}{r}\frac{\partial}{\partial r}(rH_\phi) = J + \varepsilon_o \frac{\partial E_z}{\partial t} \tag{2.18}$$

The corresponding equations for the transverse electric (TE) mode are obtained from (2.15) - (2.18) by dropping ρ and J and making the replacements $E \leftrightarrow H$, $\mu_o \leftrightarrow -\varepsilon_o$. The boundary conditions at the resistive walls do not mix the TM fields (E_r, E_z, H_ϕ) with the TE fields (H_r, H_z, E_ϕ), at least in the standard approximate treatment of boundary conditions (Ref. 22 and Appendix B). Since only the TM fields affect the longitudinal particle distribution through the Vlasov equation (2.7), we may then ignore the TE fields entirely; (under assumption (2.2) the TE fields have no sources, and in fact vanish at all times if they vanish at t = 0).

Following Landau[4], we perform a Fourier transformation of the equations with respect to z, and a Laplace transform with respect to t. (Some authors use a Fourier transform in t for stability studies, but are thereby led to logical inconsistencies that were already noted by Landau. In proving that the resulting prescriptions for computing growth times are correct one is in fact led back to the Laplace transform.) We first treat the "tube region", $r < b$, in which the series in z will have period $2\pi R$. Later we use a nonharmonic series in the "cavity region", $b < r < d$. In the tube region the Fourier-Laplace transform of a function $\phi(z, t)$ is

$$\hat{\phi}_n(p) = \frac{1}{2\pi R} \int_0^\infty e^{-pt} dt \int_{-g}^{-g+2\pi R} e^{ik_n z} \phi(z,t) dz, \tag{2.19}$$

$$k_n = n/R, \qquad n = 0, \pm 1, \pm 2, \ldots \quad . \tag{2.20}$$

The Fourier transform (without Laplace transformation), evaluated at $t = 0$, is denoted by $\phi_n(0)$. Through integration by parts,

$$\left(\frac{\partial \phi_n}{\partial t}\right)^\wedge = p\hat{\phi}_n(p) - \phi_n(0). \tag{2.21}$$

A reader committed to thinking in terms of frequencies may put $p = -i\omega$ in in the following equations.

Transformation of the linearized Vlasov equation (2.8) yields

$$(p + ik_n v)\hat{f}_n(v, p) + \frac{q}{M} \hat{E}_{zn}(r, p) \Big|_{r=0} f_o'(v) =$$

$$f_n(v, t) \Big|_{t=0} - \frac{q}{M} E_{zon} \frac{1}{p} f_o'(v). \tag{2.22}$$

In stating the transformed Maxwell equations we simplify notation by suppressing arguments r, p, n; thus $\hat{E}_{zn}(r, p) = \hat{E}_z$, and for initial values we write $E_{zn}(r, 0) = E_z(0)$. Then transformation of (2.15)-(2.18) yields

$$\frac{1}{r}\frac{\partial}{\partial r}(r\hat{E}_r) + ik\,\hat{E}_z = \frac{1}{\varepsilon_o}\hat{\rho}, \tag{2.23}$$

$$ik\,\hat{E}_r - \frac{\partial \hat{E}_z}{\partial r} = -\mu_o p\,\hat{H}_\phi + \mu_o H_\phi(0), \tag{2.24}$$

$$ik\,\hat{H}_\phi = -\varepsilon_o p\,\hat{E}_r + \varepsilon_o E_r(0), \tag{2.25}$$

$$\frac{1}{r}\frac{\partial}{\partial r}(r\,\hat{H}_\phi) = \hat{J} + \varepsilon_o p\,\hat{E}_z - \varepsilon_o E_z(0). \tag{2.26}$$

In the cavity region, $b < r < d$, $-g < z < g$, we employ generalized Fourier developments,

$$\hat{E}_r(r, z) = \sum_{s=o}^{\infty} [\hat{E}^1_{rs}(r) \sin \alpha_s z + \hat{E}^2_{rs}(r) \cos \alpha_s z],$$

$$\hat{E}_z(r, z) = \sum_{s=o}^{\infty} [\hat{E}^1_{zs}(r) \cos \alpha_s z + \hat{E}^2_{zs}(r) \sin \alpha_s z],$$

$$\hat{H}_\phi(r, z) = \sum_{s=o}^{\infty} [\hat{H}^1_{\phi s}(r) \cos \alpha_s z + \hat{H}^2_{\phi s}(r) \sin \alpha_s z]. \tag{2.27}$$

Here and in most of the equations to follow we suppress the variable p. One must keep in mind that almost all quantities, in particular the Laplace-Fourier coefficients of fields, are functions of p. The nonharmonic wave numbers α_s are certain nonlinear functions of s and p, determined by boundary conditions on the planar end walls of the cavity. It turns out that the functions $\sin \alpha_s z$ and $\cos \alpha_s z$ are mutually orthogonal, so that there is a set of equations for the cavity field coefficients analogous to (2.23)-(2.26). Again suppressing arguments r, p, s, we find that for i = 1, 2,

$$\frac{1}{r}\frac{\partial}{\partial r}(r\hat{E}^i_r) + (-)^i \alpha \hat{E}^i_z = 0, \tag{2.28}$$

$$(-)^{i+1} \alpha \hat{E}^i_r - \frac{\partial \hat{E}^i_z}{\partial r} = -\mu_o p\,\hat{H}^i_\phi + \mu_o H^i_\phi(0), \tag{2.29}$$

$$(-)^{i+1} \alpha \hat{H}^i_\phi = \varepsilon_o p\,\hat{E}^i_r - \varepsilon_o E^i_r(0), \tag{2.30}$$

$$\frac{1}{r}\frac{\partial}{\partial r}(r\,\hat{H}^i_\phi) = \varepsilon_o p\,\hat{E}^i_z - \varepsilon_o E^i_z(0). \tag{2.31}$$

The equations (2.23)-(2.26) and (2.28)-(2.31) are to be solved subject to continuity conditions at the tube-cavity interface ($r = b$, $-g < z < g$) and boundary conditions relating tangential

electric and magnetic fields at the walls. The solution is in terms of charge-current densities and initial values of fields. Expressing charge and current in terms of the distribution function, and evaluating the latter by (2.22), one finally obtains the field coefficients in terms of initial values of the fields and distribution function. For instance, one can obtain the electric field perturbation on the axis, $\hat{E}_{zn}(r, p)|_{r=0}$, in terms of the initial perturbation of the distribution function, $f(z, v, 0)$, and two independent initial field perturbations, say $E_z(r, z, 0)$ and $H_\phi(r, z, 0)$. By an inverse Laplace transformation, one may then calculate the rise time τ of an unstable perturbation as $\tau = 1/\mathrm{Re}p_*$, where p_* is the right-most singularity of $\hat{E}_{zn}(0, p)$ in the complex p-plane. This method of solution is quite analogous to that of Landau's theory, but more complicated because of the boundary conditions and the initial-value problem. The treatment of initial values was trivial in Landau's electrostatic problem, but is somewhat tedious in the present example. One expects, by analogy to Landau's case, that the particular initial values of fields and the distribution function do not affect the rise time. To make sure that there are no suprises, we have worked out the role of arbitrary initial-value terms in detail, under the restriction that the planar end walls of the cavity have infinite conductivity; (there are technical difficulties in allowing finite conductivity with initial-value terms). We report the calculations in Appendix A, and drop the initial-value terms in most of the main text.

The resistive wall boundary condition is usually stated under the assumption of exponential time dependence of the fields,[18]

which is equivalent to stating it for the Fourier transform of the fields in time. We need a statement for the Laplace transform of the fields, which is derived in Appendix B.

3. EQUATIONS FOR LAPLACE-FOURIER COEFFICIENTS OF FIELDS

In this section we find equations for the Laplace-Fourier coefficients of fields which satisfy (2.23)-(2.26), (2.28)-(2.31), and the required continuity and boundary conditions. We define three regions of the vacuum chamber:

I: $0 < r < a$

II: $a < r < b$

III: $b < r < d, \quad -g < z < g.$

In Regions I and II, the relevant Maxwell equations are (2.23)-(2.26), whereas (2.28)-(2.31) apply to Region III. To solve (2.23)-(2.26) we first find a second order equations for $\hat{E}_z$ alone. The system degenerates when $k = 0$, so that it is important to eliminate $\hat{E}_r$ and $\hat{H}_\phi$ in such a way that the resulting equation holds even at $k = 0$. Take $\hat{E}_r$ from (2.25) and substitute in (2.24); then solve (2.24) for $\hat{H}_\phi$, and substitute the latter in (2.26) to obtain

$$\frac{1}{r}\frac{\partial}{\partial r}\left(r\frac{\partial \hat{E}_z}{\partial r}\right) - \chi^2\hat{E}_z$$

$$= \frac{\chi^2}{\varepsilon_o p}\left(\hat{J} - \varepsilon_o E_z(0)\right) - \frac{1}{r}\frac{\partial}{\partial r}\{r[\mu_o H_\phi(0) - \frac{ik}{p}E_r(0)]\}, \tag{3.1}$$

where

$$\chi^2 = k^2 + (p/c)^2. \tag{3.2}$$

One of the three initial fields may be eliminated from (3.1). Make use of the continuity equation,

$$ik\hat{J} + p\hat{\rho} = \rho(0), \tag{3.3}$$

and the Poisson equation (2.15), after Fourier transformation but before Laplace transformation, evaluated at $t = 0$:

$$\frac{1}{r}\frac{\partial}{\partial r}\left(r\,E_r(0)\right) + ik\,E_z(0) = \frac{1}{\varepsilon_o}\rho(0) \tag{3.4}$$

From (3.1)-(3.4) one finds the necessary condition on $\hat{E}_z$,

$$\frac{1}{r}\frac{\partial}{\partial r}\left(r\frac{\partial \hat{E}_z}{\partial r}\right) - \chi^2\hat{E}_z$$

$$= \mu_o p\,\hat{J} + \frac{ik}{\varepsilon_o}\hat{\rho} - \frac{p}{c^2}E_z(0) - \frac{\mu_o}{r}\frac{\partial}{\partial r}\left(r\,H_\phi(0)\right). \tag{3.5}$$

The linear combination of $\hat{J}$ and $\hat{\rho}$ that appears in (3.5) is in some sense the natural analog of the charge density $\hat{\rho}$ that appears in Landau's electrostatic problem, and will occur repeatedly in the following.[23] We select $[f(0), E_z(0), H_\phi(0)]$ as the set of independent initial values to be chosen arbitrarily (within the restriction that they be small). Notice that the remaining initial value $E_r(0)$ may be expressed in terms of the others by integrating (3.4) and applying the requirement that $E_r(r, 0)$ be finite at $r = 0$:

$$E_r(r, 0) = \frac{1}{r}\int_0^r u\,du[-ikE_z(u, 0) + \frac{q}{\varepsilon_o}\theta(a - u)\int_{-\infty}^{\infty} dv\, f(v, 0)]. \tag{3.6}$$

In the remainder of this section we put all three of the initial values $[f(0), E_z(0), H_\phi(0)]$ equal to zero; hence $E_r(0) = 0$ as well. Then the only inhomogeneity in the system of linear equations is provided by the term from E_{zo} in the Vlasov equation (2.22). In other words, we are beginning with a charge and field configuration which differs from a stationary state solution $(f^{(o)}, \underline{E}^{(o)})$ of the nonlinear Maxwell-Vlasov system by the amount (2.9). The field E_{zo}, due to wall corrugations, may drive an initially uniform beam to instability.

With initial fields absent the general solution of (3.5) is given in terms of modified Bessel functions as

$$\hat{E}_z = c_1 I_o(\chi r) + c_2 K_o(\chi r) + \theta(a - r)F, \tag{3.7}$$

where

$$F = -\frac{q}{\chi^2}\int_{-\infty}^{\infty} dv\ \hat{f}(v)[\mu_o pv + \frac{ik}{\varepsilon_o}]. \tag{3.8}$$

The irregular Bessel function K_o is disallowed in Region I because of its singularity at $r = 0$. Thus, the Fourier developments of $\hat{E}_z$ in Regions I and II must have the forms

$$\hat{E}_z^{I}(r, z) = \sum_{m=-\infty}^{\infty} [A_m I_o(\chi_m r) + F_m]e^{ik_m z}, \tag{3.9}$$

$$\hat{E}_z^{II}(r, z) = \sum_{m=-\infty}^{\infty} [B_m I_o(\chi_m r) + C_m K_o(\chi_m r)]e^{ik_m z}. \tag{3.10}$$

We next find corresponding expressions for $\hat{H}_\phi$, by a method which is compatible with the discussion of Appendix A, i.e., which brings in only $E_z(0)$ and $H_\phi(0)$ when initial value terms are included. The

method is to solve (2.26) for $\hat{H}_\phi$, with $\hat{E}_z$ given by (3.9), (3.10). The general solution of the corresponding homogeneous equation is $\hat{H}_\phi = \gamma/r$, where γ is a constant. Since $I_1 = I_o'$ and $K_1 = -K_o'$, a particular solution of the inhomogeneous equation is

$$\frac{1}{r}\int_o^r u[\hat{J}(u) + \theta(a - u)\varepsilon_o pF]\, du + \frac{\varepsilon_o p}{\chi}\begin{cases} A\ I_o(\chi r) & , \ r < a, \\ B\ I_1(\chi r) - CK_1(\chi r), & r > a. \end{cases} \tag{3.11}$$

The first term of (3.11) may be expressed in terms of the initial value of the distribution function, as is seen by applying the continuity equation (3.3):

$$\hat{J}(u) + \theta(a - u)\ \varepsilon_o p\ F = \frac{-ik}{\chi^2}\rho(0) = \frac{-ik}{\chi^2}\theta(a - u)\ q\int_{-\infty}^{\infty} dv f(v, 0). \tag{3.12}$$

For the present discussion this quantity is zero. Furthermore, one can rule out a term γ/r in $\hat{H}_\phi$ by demanding that both (2.23) and (2.24) be satisfied; consequently,

$$\hat{H}_\phi^{I}(r, z) = \varepsilon_o p \sum_{m=-\infty}^{\infty} \chi_m^{-1} A_m I_o(\chi_m r)e^{ik_m z}, \tag{3.13}$$

$$\hat{H}_\phi^{II}(r, z) = \varepsilon_o p \sum_{m=-\infty}^{\infty} \chi_m^{-1}[B_m I_o(\chi_m r) - C_m K_o(\chi_m r)]e^{ik_m z}. \tag{3.14}$$

Corresponding expressions for $\hat{E}_r$ are obtained from (2.24), (2.25), given the results for $\hat{E}_z$ and $\hat{H}_\phi$. One can then verify that the fields satisfy all four Maxwell equations. If the $\hat{E}_z$ and $\hat{H}_\phi$ fields for

Region I are matched to those for Region II at $r = a$, then $\hat{E}_r$ will automatically be matched as well, by (2.25).

In Region III the non-harmonic Fourier developments (2.27) and the Maxwell equations (2.28)-(2.31) imply an equation analogous to (3.5):

$$\frac{1}{r}\frac{\partial}{\partial r}\left(r\frac{\partial \hat{E}_z^i}{\partial r}\right) - \Gamma^2 \hat{E}_z^i$$

$$= -\frac{p}{c^2}E_z^i(0) - \frac{\mu_o}{r}\frac{\partial}{\partial r}\left(r H_\phi^i(0)\right), \tag{3.15}$$

$$\Gamma^2 = \alpha^2 + (p/c)^2 \quad . \tag{3.16}$$

It is convenient to state solutions in Region III in terms of certain linear combinations of $I_o(\Gamma r)$ and $K_o(\Gamma r)$ that have simple expressions on the cylindrical cavity wall, $r = d$. Accordingly we define, for $j = 0, 1$,

$$R_j(x, y) = K_o(y)I_j(x) + (-)^{j+1}I_o(y)K_j(x), \tag{3.17}$$

$$S_j(x, y) = -K_1(y)I_j(x) + (-)^{j+1}I_1(y)K_j(x). \tag{3.18}$$

Notice that

$$R_1 = \partial R_o/\partial x, \quad S_1 = \partial S_o/\partial x, \tag{3.19}$$

and, by a standard Wronskian identity,

$$R_o(x, x) = 0, \quad S_1(x, x) = 0, \tag{3.20}$$

$$R_1(x, x) = 1/x, \quad S_o(x, x) = -1/x \ . \tag{3.21}$$

With initial value terms neglected, the general solution of equations (2.28)-(2.31) in Region III may be written

$$\hat{E}_z^i = D^i R_o(\Gamma r, \Gamma d) + D'^i S_o(\Gamma r, \Gamma d), \tag{3.22}$$

$$\hat{H}_\phi^i = \frac{\varepsilon_o p}{\Gamma}\left[D^i R_1(\Gamma r, \Gamma d) + D'^i S_1(\Gamma r, \Gamma d)\right], \tag{3.23}$$

$$\hat{E}_r^i = (-)^{i+1}\frac{\alpha}{\Gamma}\left[D^i R_1(\Gamma r, \Gamma d) + D'^i S_1(\Gamma r, \Gamma d)\right]. \tag{3.24}$$

We are now in a position to apply continuity and boundary conditions. Continuity in r at $r = a$ determines the coefficients B_m and C_m of the Region II expansions in terms of the coefficients A_m of Region I. Using the Wronskian identity (3.21) and the definition (3.18) we can then write the Region II expansions as

$$\hat{E}_z^{II}(r, z) = \sum_{m=-\infty}^{\infty}\left[A_m I_o(\chi_m r) - \chi_m a\, S_o(\chi_m r, \chi_m a)F_m\right]e^{ik_m z}, \tag{3.25}$$

$$\hat{H}_\phi^{II}(r, z) = \varepsilon_o p \sum_{m=-\infty}^{\infty}\left[\chi_m^{-1}A_m I_1(\chi_m r) - a\, S_1(\chi_m r, \chi_m a)F_m\right]e^{ik_m z}. \tag{3.26}$$

The boundary condition (B.12) applied at the cylindrical cavity wall determines the primed coefficients of (3.22)-(3.24) in terms of the unprimed ones. After Fourier transformation in z the boundary condition at $r = d$ is

$$\hat{E}^{i}_{zs}(d) = -\left(\frac{\mu p}{\sigma}\right)^{1/2}_{c} \hat{H}^{i}_{\phi s}(d) \ . \tag{3.27}$$

The subscript c (for "cavity") indicates that parameters μ, σ are those for the cylindrical cavity wall; we also write subscripts e and t ("ends" and "tube") for the cavity end walls and the cylindrical tube surface (r = b), respectively. By (3.22), (3.23) and identities (3.20), (3.21) we find

$$D'^{i} = -\frac{\eta_c}{\Gamma b} D^{i}, \tag{3.28}$$

where the dimensionless parameter η_c is defined as in Ref. 2:

$$\eta_c = -\left(\frac{\mu p}{\sigma}\right)^{1/2}_{c} \varepsilon_o p b, \tag{3.29}$$

According to (3.28), the combination of Bessel functions that now appears in Region III fields is

$$\Phi^{j}(r) = R_j(\Gamma r, \Gamma d) - \frac{\eta_c}{\Gamma b} S_j(\Gamma r, \Gamma d), \tag{3.30}$$

and the field expansions take the form

$$\hat{E}^{III}_{z}(r, z) = \sum_{s=0}^{\infty} \Phi^{o}_{s}(r)[D^{1}_{s} \cos \alpha_s z + D^{2}_{s} \sin \alpha_s z], \tag{3.31}$$

$$\hat{H}^{III}(r, z) = \varepsilon_o p \sum_{s=o}^{\infty} \Gamma^{-1}_{s} \Phi^{1}_{s}(r)[D^{1}_{s} \cos \alpha_s z + D^{2}_{s} \sin \alpha_s z], \tag{3.32}$$

$$\hat{E}^{III}_{r}(r, z) = \sum_{s=0}^{\infty} \alpha_s \Gamma^{-1}_{s} \Phi^{1}_{s}(r)[D^{1}_{s} \sin \alpha_s z - D^{2}_{s} \cos \alpha_s z]. \tag{3.33}$$

The boundary condition at the cavity end walls ($z = \mp g$, $b < r < d$), <u>before</u> Fourier transformation in z, is

$$\hat{E}_r(r, \mp g) = \mp\left(\frac{\mu p}{\sigma}\right)^{1/2}_{e} \hat{H}_{\phi}(r, \mp g). \tag{3.34}$$

By choosing the non-harmonic wave numbers α_s appropriately, we may satisfy (3.34) term-by-term in the expansions (3.32), (3.33). It is sufficient that

$$[\alpha_s \sin \alpha_s g + (\eta_e/b)\cos \alpha_s g]D^{1}_{s} + [\alpha_s \cos \alpha_s g - (\eta_e/b)\sin \alpha_s g]D^{2}_{s} = 0, \tag{3.35}$$

$$[\alpha_s \sin \alpha_s g + (\eta_e/b)\cos \alpha_s g]D^{1}_{s} - [\alpha_s \cos \alpha_s g - (\eta_e/b)\sin \alpha_s g]D^{2}_{s} = 0. \tag{3.36}$$

There are two ways for these equations to be satisfied:

$$x_s \sin x_s + \kappa \cos x_s = 0, \quad D^{2}_{s} = 0, \quad D^{1}_{s} \text{ arbitrary}, \tag{3.37}$$

$$x_s \cos x_s - \kappa \sin x_s = 0, \quad D^{1}_{s} = 0, \quad D^{2}_{s} \text{ arbitrary}, \tag{3.38}$$

where

$$x_s = \alpha_s g, \quad \kappa = \eta_e g/b = -\left(\frac{\mu p}{\sigma}\right)^{1/2}_{e} \varepsilon_o p\, g. \tag{3.39}$$

To find solutions of the nonlinear equations (3.37), (3.38), we take advantage of the circumstance that the dimensionless parameter κ is typically small compared to 1 for the values of p of interest. The values of p of interest, those involved in computing the rise times of

unstable perturbations, are close to the points $p = \mp i\omega_r$, where $\omega_r = j_{01}c/d$ is the fundamental frequency of a cylindrical cavity of radius d; (see the heuristic argument of the introduction, or the calculations of Part II). Then the order of magnitude of $|\kappa|$ is

$$|\kappa| \sim \left(\frac{\mu_o\omega_r}{\sigma_e}\right)^{1/2} \varepsilon_o\omega_r g = j_{01}^{3/2}(\sigma_e d Z_o)^{-1/2}(g/d), \tag{3.40}$$

where $Z_o = (\mu_o/\varepsilon_o)^{1/2} = (120\pi \text{ ohm})$ is the impedance of free space. For the conductivity of stainless steel, $\sigma_e \approx 10^6(\text{ohm-meter})^{-1}$, and $d \approx g \approx 1$ meter, we than have $|\kappa| \sim 2 \times 10^{-4}$. The parameters η_t, η_c, η_e are typically of a similar order. In the following we shall expand various quantities in powers of κ or the η's and retain only the lowest powers, keeping in mind that the resulting approximations are not good at large $|p|$. Large values of $|p|$ enter the problem only if one wishes to compute the full time dependence of the fields, not just the asymptotic time dependence which is the sole concern of stability studies.

An expansion of the solution x_s of (3.37) or (3.38) in powers of κ gives

$$x_s = s\pi/2 - 2\kappa/s\pi - 8\kappa^2/(s\pi)^3 + \ldots, \tag{3.41}$$

$$s = 1, 2, \ldots$$

where x_s solves (3.37) for even s and (3.38) for odd s. There is also a solution of (3.37) close to zero, which may be expanded in powers of $\kappa^{1/2}$:

$$x_o = -i\,\kappa^{1/2}(1 + \kappa/6 + \ldots) . \tag{3.42}$$

The negative of each of the solutions (3.41), (3.42) is also a solution, but by a redefinition of coefficients D_s^i one sees that it would be redundant to include a corresponding term in the expansions (3.31)-(3.33). There is also the extraneous solution $x_s = 0$ of (3.38), but it makes no contribution to the field expansions. The implicit function theorem for analytic functions[24] may be invoked to show that the series (3.41) and (3.42) converge for sufficiently small $|\kappa|$. Also, the solutions we have found are unique if $|\kappa| < \pi^2/16$, as may be seen by applying Rouché's theorem;[25] all the solutions are close to those of $\sin 2x = 0$.

The functions $\cos \alpha_s z$ and $\sin \alpha_s z$ form an orthogonal set on the interval $[-g, g]$. Accordingly, we define the orthonormal functions

$$f_s(z) = [1 - \kappa/(x_s^2 + \kappa^2)]^{-1/2} \begin{cases} (-)^{s/2}\cos \alpha_s z, & s \text{ even}, \\ (-)^{(s+1)/2}\sin \alpha_s z, & s \text{ odd}. \end{cases} \tag{3.43}$$

The peculiar sign factors are introduced so that f_s takes the convenient form $\cos \alpha_s(z + g)$ at $\kappa = 0$, a form that is used in Appendix A. The f_s are orthonormal in the sense

$$\frac{1}{g}\int_{-g}^{g} f_s(z)f_t(z)dz = \delta_{st}. \tag{3.44}$$

The result (3.44) follows from the definition of $x_s = \alpha_s g$ as a solution of (3.37) (s even) or (3.38) (s odd).

The set $\{f_s(z)\}$ is complete as well as orthogonal. For $|\kappa| < \pi^2/16$ the wave numbers α_s give rise to a Riesz basis for the space $L^2[-g, g]$ of square-integrable functions, and the f_s form a complete set in that space.[26] Completeness in the space of continuous functions $C(-g,g)$ may be established by considering, for u,v $(-g,g)$, the integral

$$\int_\gamma d\lambda \left[\frac{\lambda \sin(\lambda u/g)\sin(\lambda v/g)}{\sin\lambda(\lambda\cos\lambda - \kappa \sin\lambda)} + \frac{\kappa \cos(\lambda u/g)\ \cos(\lambda v/g)}{\sin\lambda(\lambda\sin\lambda + \kappa\cos\lambda)}\right] = 0. \tag{3.45}$$

Here γ is any closed contour such that the zeros of the denominators all lie outside γ. By deforming the contour to infinity and noting that the integrand vanishes exponentially as $\mathrm{Im}\lambda \to \pm\infty$, we deduce from the residue theorem that

$$\sum_{s=0}^{\infty} f_s(u)f_s(v) = \frac{1}{2} + \sum_{s=1}^{\infty} [\cos(s\pi u/g)\cos(s\pi v/g) + \sin(s\pi u/g)\sin(s\pi v/g)] = g\delta(u - v). \tag{3.46}$$

Of course, this formal statement of completeness is to be interpreted through term-by-term integration of the product of (3.46) with a continuous function.

The use of nonharmonic Fourier series has a long history[26-29]. The functions $f_s(z)$ are well-known in the theory of heat conduction[27,28].

Redefining the Fourier coefficients, we write (3.31), (3.32) as

$$\hat{E}_z^{III}(r, z) = \sum_{s=0}^{\infty} D_s \phi_s^o(r) f_s(z), \tag{3.47}$$

$$\hat{H}_\phi^{III}(r, z) = \varepsilon_o p \sum_{s=0}^{\infty} \Gamma_s^{-1} D_s \phi_s^1(r) f_s(z). \tag{3.48}$$

The remaining continuity and boundary conditions to be satisfied are at $r = b$:

$$\hat{E}_z^{II}(b, z) = \hat{E}_z^{III}(b, z), \qquad -g < z < g, \tag{3.49}$$

$$\hat{E}_z^{II}(b, z) = -\left(\frac{\mu p}{\sigma}\right)_t^{1/2} \hat{H}_\phi^{II}(b, z), \qquad g < z < 2\pi R - g, \tag{3.50}$$

$$\hat{H}_\phi^{II}(b, z) = \hat{H}_\phi^{III}(b, z), \qquad -g < z < g. \tag{3.51}$$

To state these conditions in terms of Fourier coefficients, we use the orthogonality (3.44), as well as the additional overlap integrals,

$$\frac{1}{2\pi R}\int_{-g}^{-g+2\pi R} \exp[i(k_n - k_m)z]dz = \delta_{nm} \tag{3.52}$$

$$\frac{1}{2\pi R}\int_{-g}^{g} \exp[-ik_n z]f_s(z)dz = \alpha f_s(g)N_{ns}, \tag{3.53}$$

$$\frac{1}{2\pi R}\int_{g}^{-g+2\pi R} \exp[i(k_n - k_m)z]dz = \delta_{nm} - \alpha V_{nm}. \tag{3.54}$$

The quantities appearing here are

$$N_{ns} = \frac{1}{2i}\frac{(-)^s}{(k_n g)^2 - x_s^2}\,[(k_n g + i\kappa)\exp(ik_n g) - (-)^s(k_n g - i\kappa)\exp(-ik_n g)], \tag{3.55}$$

$$\alpha = \frac{g}{\pi R}, \qquad V_{nm} = \frac{\sin(k_n - k_m)g}{(k_n - k_m)g}. \tag{3.56}$$

By (3.37), (3.38) it is possible to write $f_s(g)$ as

$$f_s(g) = (-)^s x_s(x_s^2 - \kappa + \kappa^2)^{-1/2}. \tag{3.57}$$

Now multiply (3.47) and (3.48) by $\exp(-ik_n z)$ and integrate over $[-g, -g + 2\pi R]$. Multiply (3.49) by $f_s(z)$ and integrate over $[-g, g]$. Noting the expansions (3.25), (3.26), (3.47), (3.48) and the overlap integrals (3.44), (3.52), (3.53), (3.54), we obtain two sets of linear equations for the A_m and D_s. Adopting a notation similar to that of Ref. 2, we state the equations in terms of the following functions:

$$\bar{A}_n = A_n I_o(\chi_n b), \qquad \bar{D}_s = D_s \Phi_s^o(b) f_s(g), \tag{3.58}$$

$$\bar{B}_n = -\chi_n a S_o(\chi_n b, \chi_n a) F_n, \qquad \bar{C}_n = -(a/b) S_1(\chi_n b, \chi_n a) F_n, \tag{3.59}$$

$$R_s = 2f_s^2(g)\Phi_s^o(b)\Gamma_s b/\Phi_s^1(b), \qquad I_n = I_1(\chi_n b)/\chi_n b I_o(\chi_n b). \tag{3.60}$$

The equations, analogous to Eqs. (1.23) of Ref. 2, are

$$\bar{A}_m = -\bar{B}_m + \alpha\sum_{s=0}^{\infty} N_{ms}\bar{D}_s + \eta_t \sum_{n=-\infty}^{\infty}(\delta_{mn} - \alpha V_{mn})(I_n\bar{A}_n + C_n) \tag{3.61}$$

$$\bar{D}_s = R_s \sum_{m=-\infty}^{\infty} N_{-ms}(I_m\bar{A}_m + \bar{C}_m). \tag{3.62}$$

To solve (3.61), (3.62), a convenient first step is to eliminate $\bar{A}_n$ in favor of $\bar{D}_s$, or vice versa. To that end we use matrix notation, and define a matrix $\tilde{N}$ with elements

$$\tilde{N}_{sn} = N_{-ns}. \tag{3.63}$$

If the cavity end walls have infinite conductivity ($\kappa = 0$), $\tilde{N}$ is equal to N^+, the Hermitian adjoint of N. We shall prove that $V = \{V_{mn}\}$ has the representation

$$V = Nv\tilde{N}, \tag{3.64}$$

$$v = \{v_{st}\} = \{2f_s^2(g)\delta_{st}\}. \tag{3.65}$$

Defining diagonal matrices $R = \{R_s\delta_{st}\}$, $I = \{I_m\delta_{mn}\}$, we may then write equations (3.61), (3.62) in matrix notation as

$$\bar{A} = -\bar{B} + \alpha N\bar{D} + \eta_t(1 - \alpha Nv\tilde{N})(I\bar{A} + \bar{C}), \tag{3.66}$$

$$\bar{D} = R\tilde{N}(I\bar{A} + \bar{C}). \tag{3.67}$$

The unit matrix is always written as a numeral 1.

To eliminate $\bar{A}$, first rearrange (3.66): bring the term $\eta_t I\bar{A}$ to the left side, and then multiply the equation on the left by $\tilde{N}I(1 - \eta_t I)^{-1}$. The equation then involves $\bar{A}$ only in the product $\tilde{N}I\bar{A}$, which may be

expressed in terms of $\bar{D}$ by (3.67). The resulting equation for $\bar{D}$ alone takes the form

$$\bar{D} = RE\bar{D} + R\tilde{N}(1 - \eta_t I)^{-1}\bar{Y}, \tag{3.68}$$

where the kernel matrix E is

$$E = \alpha\tilde{N}I(1-\eta_t I)^{-1}N(1 - \eta_t vR^{-1}). \tag{3.69}$$

The source term of (3.68), linear in the charge-current vector $F = \{F_n\}$, entails the vector

$$\bar{Y} = \bar{C} - I\bar{B}. \tag{3.70}$$

By (3.18), (3.21), (3.59), and (3.60), the components of $\bar{Y}$ may be written as

$$\bar{Y}_n = -\frac{1}{\chi_n b}\frac{a}{b}\frac{I_1(\chi_n a)}{I_o(\chi_n b)}F_n. \tag{3.71}$$

Elimination of $\bar{D}$ in favor of $\bar{A}$ leads from (3.66), (3.67) to the equation

$$\bar{A} = GI\bar{A} + G\bar{C} - \bar{B}, \tag{3.72}$$

with kernel matrix

$$G = \eta_t + \alpha N(R - \eta_t v)\tilde{N}. \tag{3.73}$$

Another useful equation is that which expresses $\bar{A}$ in terms of $\bar{D}$. In (3.66) take $\eta_t I\bar{A}$ to the left side, and then multiply on the left by $(1 - \eta_t I)^{-1}$. Express $\tilde{N}I\bar{A}$ in terms of $\bar{D}$ by (3.67), and then eliminate $\bar{C}$ in favor of $\bar{Y}$ by (3.70). The result is

$$\bar{A} = \alpha(1 - \eta_t I)^{-1}N(1 - \eta_t vR^{-1})\bar{D} + \eta_t(1 - \eta_t I)^{-1}\bar{Y} - \bar{B}. \tag{3.74}$$

The companion equation giving $\bar{D}$ in terms of $\bar{A}$ is (3.67).

To demonstrate (3.64), expand $\exp(ik_n z)$ in the orthonormal set $\{f_t(z)\}$ on $[-g, g]$ to obtain

$$\exp(ik_n z) = 2\sum_{t=0}^{\infty} f_t(g)N_{-nt}f_t(z). \tag{3.75}$$

Now multiply by $\exp(-ik_m z)$ and integrate over $[-g, g]$. The resulting equation is exactly (3.64).

For a given charge-current distribution, specified through the function F_n of (3.8), the electromagnetic fields may be determined either by solving (3.68) for $\bar{D}$ or by solving (3.72) for $\bar{A}$. For deep cavities, $d \gg b$, the Region III field coefficients $\bar{D}_s$ are close to being the normal mode amplitudes of the system, and (3.68) is the appropriate equation. The kernel E is nearly diagonal when $d \gg b$, so that the various cavity modes almost decouple, and the equation is easy to solve numerically. In the less interesting case of shallow cavities, $b \approx d$, the $\bar{A}_n$ are approximately normal mode amplitudes, and Eq. (3.72) is the more tractable one. In realistic cases of interest the range of d/b may be of the order $2 < d/b < 5$. In such cases (3.68) is strongly preferred.

A remark on the relation of (3.68) to the equation employed by Keil and Zotter[2] may be helpful. Their equation (3.4) is most easily compared with our (3.68) in the case where all wall conductivities are infinite. The unknown of their equation, $\bar{X}'$, is then simply related to $\bar{D}$; in fact, $\bar{X}' = \bar{D} - RN^{\dagger}\bar{Y}$. The equations for $\bar{X}'$ and $\bar{D}$ consequently have the same kernel, but different source terms:

$$\bar{X}' = \alpha RN^{\dagger}IN\bar{X}' + \alpha RN^{\dagger}INRN^{\dagger}\bar{Y}. \tag{3.76}$$

$$\bar{D} = \alpha RN^{\dagger}IN\bar{D} + RN^{\dagger}\bar{Y}. \tag{3.77}$$

With finite conductivity the situation is essentially the same: the equation for $\bar{X}'$ has mathematical properties similar to that for $\bar{D}$, but has a more complicated form. We prefer the $\bar{D}$ equation for its simplicity and its more direct physical interpretation as the equation for cavity modes.

4. EQUATIONS FOR FIELD COEFFICIENTS WITH VLASOV SELF-CONSISTENCY

To compute rise times of unstable perturbations the Vlasov equation (2.22) must be combined with the electromagnetic equation, either (3.68) or (3.72). The charge-current density, expressed through F_n of (3.8), is to be eliminated in favor of field coefficients. By (3.9) and (3.58),

$$\hat{E}^{I}_{zn}(r)\Big|_{r=0} = A_n + F_n = \bar{A}_n/I_o(\chi_n b) + F_n. \tag{4.1}$$

Following the viewpoint of Section 3 we put the initial value term $f_n(v, 0)$ equal to zero, so that (4.1) and (2.22) give

$$\hat{f}_n(v, p) = -\frac{q}{M} f_o'(v)(p + ik_n v)^{-1}[A_n(p) + F_n(p) + E_{zon}/p]. \tag{4.2}$$

By the definition (3.8) of F_n and (4.2) we can integrate on v to get

$$F_n(p) = \frac{q^2\mu_o}{M}\int_{-\infty}^{\infty} dv\, \frac{f_o'(v)}{\chi_n^2}\,\frac{pv + ik_n c^2}{p + ik_n v}\,[A_n(p) + F_n(p) + E_{zon}/p]. \tag{4.3}$$

The integral may be cast into a form familiar in plasma theory. For $n \neq 0$ the definition (3.2) of χ_n^2 gives

$$\frac{pv + ik_n c^2}{p + ik_n v} = \frac{p}{ik_n} - \frac{c^2\chi_n^2}{ik_n}\,\frac{1}{p + ik_n v}\ . \tag{4.4}$$

The first term on the right integrates to zero (since $f_o(\pm\infty) = 0$), and the factor in front of the bracket in (4.3) may be written as

$$\frac{-q^2}{\varepsilon_o M}\frac{1}{ik_n}\int_{-\infty}^{\infty}\frac{dvf_o'(v)}{p + ik_n v} = -\frac{q^2}{\varepsilon_o M}\int_{-\infty}^{\infty}\frac{dvf_o(v)}{(p + ik_n v)^2}. \tag{4.5}$$

The latter way of writing the factor is correct also for n = 0. Recall that by (2.11),

$$\int_{-\infty}^{\infty} dvf_o(v) = N \tag{4.6}$$

where N is the average particle density. Let us define a plasma dispersion function,

$$W_n(p) = \frac{\omega_p^2}{N}\int_{-\infty}^{\infty}\frac{dvf_o(v)}{(p + ik_n v)^2}, \tag{4.7}$$

where ω_p^2 is the squared plasma frequency,

$$\omega_p^2 = \frac{q^2 N}{\varepsilon_o M}. \tag{4.8}$$

Then (4.3) may be written as

$$F_n = -W_n[\hat{E}_{zn} + E_{zon}/p], \tag{4.9}$$

where $\hat{E}_{zn}$ represents the left side of (4.1). Equivalently,

$$F_n = \frac{-W_n}{1 + W_n}\left[\frac{\bar{A}_n}{I_o(\chi_n b)} + \frac{E_{zon}}{p}\right]. \tag{4.10}$$

According to (3.72), (3.59), and (4.1), the coefficients of the electric field on the axis, $\hat{E}_{zm}$, are homogeneous linear functions of the F_n, which we write as

$$\hat{E}_{zm} = \sum_{n=-\infty}^{\infty}\zeta_{mn}F_n. \tag{4.11}$$

In view of (4.9) we then have an equation for the $\hat{E}_{zn}$ alone,

$$\hat{E}_{zm}(p) + \sum_{n=-\infty}^{\infty}\zeta_{mn}(p)W_n(p)\hat{E}_{zn}(p) = E_{zm}^{(o)}(p) \tag{4.12}$$

where

$$E_{zm}^{(o)}(p) = -\frac{1}{p}\sum_{n=-\infty}^{\infty}\zeta_{mn}(p)W_n(p)E_{zon}. \tag{4.13}$$

If initial-value terms were included, the right side of (4.12) would have additional terms depending on initial values $[f(0), E_z(0), H_\phi(0)]$, but the left side would be exactly the same; see Appendix A.

The rise time τ of an unstable perturbation is to be read off from the inverse Laplace transform,

$$E_{zn}(t) = \frac{1}{2\pi i}\int_{\gamma-i\infty}^{\gamma+i\infty} e^{pt}\hat{E}_{zn}(p)dp. \tag{4.14}$$

The integration contour in (4.14) may be moved to the left by decreasing γ until $\gamma = \mathrm{Re}p_*$, where p_* is the location of the rightmost singularity of $\hat{E}_{zn}(p)$ in the complex p-plane. Generically, two complex-conjugate simple poles in the right half p-plane are the rightmost singularities. If those poles are at $p_* = u \pm iv$, then a translation of the contour beyond the poles gives the asymptotic form in terms of pole residues,

$$E_{zn}(t) \sim e^{(u+iv)t}\,\mathrm{res}(\hat{E}_{zn})_{u+iv} + e^{(u-iv)t}\,\mathrm{res}(\hat{E}_{zn})_{u-iv}, \quad t \to \infty, \tag{4.15}$$

and the growth time is defined as $\tau = 1/u$,

Since $W_n(p)$ is analytic in the right half plane, singularities of $\hat{E}_{zn}(p)$ as determined by (4.12) could come only from $\zeta_{nm}(p)$ or from zeros of the determinant of the system,

$$\det\big(1 + \zeta(p)W(p)\big) = 0. \tag{4.16}$$

We shall argue that ζ is in fact analytic in the right half plane, so that zeros of the determinant fix the rise time; see the discussion of ζ following (4.22) below.

In practice the evaluation of the determinant is easy if the matrix ζ is known, since it is typical that only one term in the sum of (4.12) is appreciable. As a quantitative discussion in Part II will show, a term in that sum is important only if p is near a cavity resonance (which corresponds to a pole of $\zeta(p)$ at a point p_r in the <u>left</u> half plane near the imaginary axis) <u>and</u> m is such that $|W_m(p)|$ is maximum for that p. Now $|W_m|$ has just one (very sharp) maximum, if it is regarded as a function of a continuous real variable m at fixed $p \approx p_r$. The location of that maximum is given roughly by $\mathrm{Im}\,p_r + k_m v_o = 0$, where v_o is the mean velocity of the unperturbed distribution $f_o(v)$. Since m is actually an integer, there will be at most two (neighboring) values of m for which $|W_m|$ is large. The velocity v_o (or other parameters) may be tuned so that only one m gives a large contribution. In that case only one column of ζW is large, the evaluation of the determinant is trivial, and the equation determining rise times is

$$\det\big(1 + \zeta(p)W(p)\big) \approx 1 + \zeta_{mm}(p)W_m(p) = 0. \tag{4.17}$$

This is the familiar dispersion relation of plasma theory, and ζ_{mm} is a dimensionless form of the usual coupling impedance of accelerator theory; (see Part II for the exact relation to the impedance).

As we shall see in Part II, the shortest growth time occurs when v_o is tuned so that only one m is important. We may, however, tune v_o so that both m and m + 1 are important. Regarding W_m and W_{m+1} as functions of p, one is then at a value of p roughly midway between the maximum of W_m and that of W_{m+1}. This case of "falling between two chairs" leads to growth times longer than minimum, but must be included if one wishes to survey the full dependence on v_o or other parameters. Since two columns of ζW are large, the conventional description in terms of a single impedance fails, and the dispersion relation has the form

$$\det(1 + \zeta W) \approx$$

$$1 + \zeta_{mm}W_m + \zeta_{m+1,m+1}W_{m+1} + W_m W_{m+1}\begin{vmatrix} \zeta_{mm} & \zeta_{m,\,m+1} \\ \zeta_{m+1,m} & \zeta_{m+1,m+1} \end{vmatrix} = 0. \tag{4.18}$$

There is yet another way in which two different values of m can be important, which is discussed in Part II. It corresponds to a special choice of parameters for which effects of neighboring m values cancel, and leads to anomalously long growth times.

By (4.11) the computation of ζ_{mn} amounts to computing $\hat{E}_{zm}$ for $F_m = \delta_{nm}$. That computation can be done in two ways. For shallow cavities, the proper way is to solve (3.72) for $\bar{A}_m$ with $F_m = \delta_{nm}$, and then

obtain $\hat{E}_{zm}$ from (4.1). For deep cavities, one should solve (3.68) for $\bar{D}_s$, then get $\bar{A}_m$ from (3.74) and $\hat{E}_{zm}$ from (4.1). The latter approach is comparable to the method of Ref. 2, and gives the following expression for ζ:

$$\zeta_{mn} = \theta_n \delta_{mn} - \frac{\alpha(z/b)^2[N(1 - \eta_t v R^{-1})(1 - RE)^{-1}R\tilde{N}]_{mn} I_1(\chi_n a)}{I_o(\chi_m b)(1 - \eta_t I_m)\chi_n a I_o(\chi_n b)(1 - \eta_t I_n)}, \tag{4.19}$$

where

$$\theta_n = 1 + \frac{\chi_n a}{I_o(\chi_n b)} S_o(\chi_n b, \chi_n a) - \left(\frac{a}{b}\right)^2 \frac{\eta_t}{1 - \eta_t I_n} \frac{I_1(\chi_n a)}{\chi_n a I_o^2(\chi_n b)}. \tag{4.20}$$

The formula obtained by solving (3.72) is

$$\zeta_{mn} = \delta_{mn} + \sum_{\ell=-\infty}^{\infty} [1 - H]^{-1}_{m\ell}[I_o(\chi_\ell b) - \eta_t I_1(\chi_\ell b)/\chi_\ell b]^{-1} \cdot$$

$$\cdot\{\delta_{\ell n}[\chi_n a S_o(\chi_n b, \chi_n a) - \eta_t (a/b) S_1(\chi_n b, \chi_n a)] - \alpha(a/b)[N(R - \eta_t v)\tilde{N}]_{\ell n} S_1(\chi_n b, \chi_n a)\} \tag{4.21}$$

where the matrix H is defined

$$H_{nm} = \alpha[I_o(\chi_n b) - \eta_t I_1(\chi_n b)/\chi_n b]^{-1}[N(R - \eta_t v)\tilde{N}]_{nm} I_1(\chi_m b)/\chi_m b. \tag{4.22}$$

As mentioned above, we wish to show that $\zeta(p)$ has no singularity in the right half p-plane. Since ζ involves the solution of an infinite-dimensional equation, not known in explicit form, it is not

easy to make a direct analytical demonstration. We can give a persuasive physical argument, however, on the basis of the definition of ζ in (4.11). If the charge and current perturbations were given time-independent functions, rather than being determined by Vlasov dynamics, then the field perturbation would also have to be time independent. Consequently the Laplace transform of the field would have no singularity in the right half p-plane, but would have a singularity on the imaginary axis. The Laplace transform of a constant function is proportional to 1/p, so that by (3.8) the $F_n(p)$ for a time-independent charge-current distribution is analytic except for poles at $p = 0$ and $p = \pm ick_n$ (the latter from the factor χ_n^{-2}). Since $\hat{E}_{zn}(p)$ must have no singularity in the right half-plane for such an F_n, we infer that $\zeta_{nm}(p)$ must also have none; (take $\hat{f}_n(v,p) = \delta_{nm} f_m(v)/p$, to see that each element of ζ is free of singularities).

The above discussion emphasizes the electric field on the tube axis, and represents the conventional viewpoint of accelerator theory. It is more natural, however, to emphasize the field in the cavity region, if the cavities are fairly deep and resonant. The axial field and the distribution function may be eliminated in favor of the cavity mode coefficients $\bar{D}$. The rise time of an instability may be found directly from the inverse Laplace transform of $\bar{D}(p)$, and there is no need to consider the axial field. The self-consistent equation for $\bar{D}$ has an appealing form, and is easier to analyze in a precise way than the scheme described above.

To derive the equation, take $\bar{A}_n$ from (3.74) and substitute in (4.10). Solve the resulting equation for F_n in terms of $\bar{D}_s$ to obtain

$$F_n = \frac{-W_n}{1 + \theta_n W_n} \left[\frac{\alpha}{(1 - \eta_t I_n) I_o(\chi_n b)} [N(1 - \eta_t v R^{-1}) \bar{D}]_n + \frac{E_{zon}}{p} \right]. \tag{4.23}$$

Now introduce this result for F_n in the source term of (3.68), using (3.71), to obtain the desired equation for $\bar{D}$ with Vlasov self-consistency:

$$\bar{D}_s = R_s \left[\sum_{t=0}^{\infty} (E_{st} + S_{st}) \bar{D}_t + \bar{D}_s^{(o)} \right] \tag{4.24}$$

The letters E and S denote "electromagnetic" and "self-consistency" parts of the kernel. That is, E is the same kernel (3.69) that occurs in our previous equation (3.68) with given source term, and S is the new piece that arises from expressing the source in terms of the field itself. We have

$$E_{su} + S_{su} =$$

$$\alpha \sum_{m=-\infty}^{\infty} \tilde{N}_{sm} \left[\frac{I_m}{1 - \eta_t I_m} + \frac{1}{(1 - \eta_t I_m)^2} \left(\frac{a}{b}\right)^2 \frac{I_1(\chi_m a)}{\chi_m a I_o^2(\chi_m b)} \frac{W_m}{1 + \theta_m W_m} \right] N_{mu} \cdot$$

$$\cdot [1 - \eta_t v_u R_u^{-1}] \tag{4.25}$$

Under present assumptions the inhomogeneous term is

$$\bar{D}_s^{(o)} = \frac{1}{p} \left(\frac{a}{b}\right)^2 \sum_{m=-\infty}^{\infty} \tilde{N}_{sm} \frac{1}{1 - \eta_t I_m} \frac{I_1(\chi_m a)}{\chi_m a I_o(\chi_m b)} \frac{W_m E_{zom}}{1 + \theta_m W_m}. \tag{4.26}$$

More generally, $\bar{D}^{(o)}$ contains various initial-value terms; see Appendix A.

Rise times of unstable perturbations could be obtained from zeros of the determinant of (4.24):

$$\det [1 - R(p)(E(p) + S(p))] = 0. \tag{4.27}$$

By solving (4.27) one effectively solves the electromagnetic problem and the dispersion relation simultaneously, without the intermediate step of computing an impedance. In Part II we shall find it better not to work with (4.27) as it stands. We eliminate the resonant mode from (4.24), and consider the determinant of the reduced equation.

5. WATSON-SOMMERFELD TRANSFORMATION

A difficulty arises in the practical computation of the sum in (4.25) that defines the kernel E. The factor $\tilde{N}_{sm}$ or N_{ms} is maximum as a function of m when its denominator is minimum, $k_m g = mg/R \approx \pm x_s$. In typical cases of interest this occurs at a value of $m = m_*$ which is large from the view point of practical computation, even for the first few values of s. Values of m far beyond m_* must be included for an accurate summation of the series, and the situation gets worse as s increases.

A Watson-Sommerfeld transformation[29,30] replaces the difference of squares in the denominators by a sum of squares, and thereby circumvents the difficulty. Furthermore, the transformation eliminates the Bessel functions in favor of easily computed Bessel function zeros, reveals the behavior of the sum for $b/d \to 0$, and facilitates the treatment of Eq. (4.24) by Fredholm theory. There is no reason to make a corresponding transformation of the sum defining the self-consistency kernel S. As we show in Part II, only one or two terms of this sum are important (those for which $1 + \theta_m W_m \approx 0$), and in any case the sum converges exponentially.

Let us define

$$f(m,s,t) = \tilde{N}_{sm} N_{mt} = N_{-ms} N_{mt}. \tag{5.1}$$

The sum that occurs in the kernel E is

$$\Sigma_{st} = \sum_{m=-\infty}^{\infty} f(m,s,t) I_m (1 - \eta_t I_m)^{-1}. \tag{5.2}$$

For s-t odd, Σ_{st} vanishes: then f is odd in m, while I_m as defined in (3.60) is even. Henceforth taking s-t to be even we write

$$f = f^{(+)} + f^{(-)}, \tag{5.3}$$

$$f^{(\pm)} = \frac{1}{4} \frac{1}{(k_m g)^2 - x_s^2} \frac{1}{(k_m g)^2 - x_t^2} \cdot \left[(k_m g)^2 + \kappa^2 + (-)^{s+1} (k_m g \mp i\kappa)^2 e^{\mp 2ik_m g} \right] \tag{5.4}$$

The numerator of (5.4) vanishes at $k_m g = \pm x$, where x satisfies (3.37) for s even and (3.38) for s odd. Thus $f^{(\pm)}$ is bounded at $k_m g = \pm x_s$, $\pm x_t$ provided that $s \neq t$. If $s = t$ there is a pole with residue given by

$$\lim_{k_m g \to \pm x_s} [(m \mp x_s R/g) f^{(+)}(m,s,s)] = -\lim_{k_m g \to \pm x_s} [(m \mp x_s R/g) f^{(-)}(m,s,s)] = \frac{iR}{g} \frac{x_s^2 - \kappa + \kappa^2}{8x_s^2}. \tag{5.5}$$

Except for the poles that occur when $s = t$, $f^{(\pm)}$ has no singularities in the finite m plane and for large $|m|$ has the bound

$$|f^{(\pm)}(m)| \leq \frac{c}{|m|^2} [1 + e^{\pm(2g/R)\mathrm{Im}(m)}], \tag{5.6}$$

where c is a positive constant.

To convert the sum to an integral we employ the functions

$$\phi^{(\pm)}(m) = J(m) f^{(\pm)}(m) e^{\pm i\pi m} / \sin \pi m, \tag{5.7}$$

where

$$J(m) = \frac{I_m}{1 - \eta_t I_m} = \frac{I_1(\chi_m b)}{\chi_m b I_o(\chi_m b) - \eta_t I_1(\chi_m b)}. \tag{5.8}$$

Now $\phi^{(\pm)}$ has poles at the integers with residue

$$\lim_{m \to n} (m - n)\phi^{(\pm)}(m) = \frac{1}{\pi} J(n) f^{(\pm)}(n), \tag{5.9}$$

and poles that arise from zeros of the denominator of J. Since η_t is small compared to one, the latter are close to the zeros of $I_o(\chi_m b)$, which is to say near the points at which $\chi_m b = \pm i j_{oi}$, where j_{oi} is the i-th zero of the ordinary Bessel function J_o. With such points as the first approximation, Newton's method locates the poles of J(m) at the points $m = \pm m_i$, where

$$m_i = iR\left[\left(\frac{p}{c}\right)^2 + \left(\frac{j_{oi}}{b}\right)^2 \left(1 - \frac{2\eta_t}{j_{oi}^2}\right)\right]^{1/2}, \tag{5.10}$$

$$i = 1, 2, \ldots$$

Inside the square root the exact expression has been expanded to lowest order in η_t. The poles at $m = \pm m_i$ have residue

$$\lim_{m \to \pm m_i} (m \mp m_i) J(m) = \frac{\pm 1}{m_i}\left(1 + \frac{2\eta_t}{j_{oi}^2}\right)\left(\frac{R}{b}\right)^2, \tag{5.11}$$

to lowest order in η_t. Except for these poles J(m) is analytic in the finite m-plane. The branch point of χ_m does not appear in J(m), because the entire functions $I_o(z)$ and $I_1(z)/z$ contain only even powers of z.

In view of (5.6) and the fact that I_o and I_1 have the same

asymptotic behavior, the functions $\phi^{(\pm)}$ are bounded as follows at large $|m|$:

$$|\phi^{(\pm)}(m)| \leqslant \frac{c}{|m|^3} \tag{5.12}$$

In fact, each of the functions $\phi^{(\pm)}$ decreases cubically in one half-plane, and exponentially in the other.

We shall integrate over a path C consisting of a rectangle with corners $-A \pm iB$, $A \pm iB$, where A lies between two positive integers, $M < A < M + 1$. We first take $s \neq t$, and choose B and p so that J(m) has no poles inside C. Then by (5.3) and (5.9),

$$\int_C [\phi^{(+)}(m) + \phi^{(-)}(m)]dm = 2i \sum_{m=-M}^{M} J(m) f(m), \tag{5.13}$$

since the only singularities of the integrand inside C are poles at integers. Taking a sequence of paths C with increasing A we obtain the required sum (5.2) as an integral:

$$\Sigma_{st} = \frac{1}{2i}\left[\int_{-\infty-iB}^{\infty-iB} + \int_{\infty+iB}^{-\infty+iB}\right] [\phi^{(+)}(m) + \phi^{(-)}(m)]dm. \tag{5.14}$$

Now the integral on $\mathrm{Im}(m) = \pm B$ may be replaced by an integral over an infinite semi-circle in the upper (lower) half-plane, plus a contribution from the poles at the points $\pm m_i$. According to (5.12) the integrals on the semi-circles vanish, and the formula (5.11) for pole residues gives

$$\Sigma_{st} = \pi\left(\frac{R}{b}\right)^2 \sum_{i=1}^{\infty} \frac{1}{m_i}\left(1 + \frac{2\eta_t}{j_{oi}^2}\right)\left[f^{(+)}(-m_i)\frac{e^{-i\pi m_i}}{\sin(-\pi m_i)} + f^{(-)}(-m_i)\frac{e^{i\pi m_i}}{\sin(-\pi m_i)} - f^{(+)}(m_i)\frac{e^{i\pi m_i}}{\sin \pi m_i} - f^{(-)}(m_i)\frac{e^{-i\pi m_i}}{\sin \pi m_i}\right] \tag{5.15}$$

We have chosen the branch of the square root in (5.10) so that m_i is in the upper half-plane. Since $f^{(+)}(m) = f^{(-)}(-m)$, the poles in the upper and lower half-planes give equal contributions. For $s = t$ there is an additional term in Σ_{st} from the poles at $m = \pm x_s R/g$ with residue (5.5). These poles are close to the real axis, and give the following addition to Σ_{st}:

$$\frac{1}{2\alpha}\left[1 - \frac{\kappa(1-\kappa)}{x_s^2}\right] J(x_s R/g)\,\delta_{st}. \tag{5.16}$$

Since the m_i are near the imagnary axis for the values of p of interest, it is convenient to state the final form of Σ_{st} in terms of nearly real numbers μ_i defined by

$$m_i = i\mu_i. \tag{5.17}$$

Then (5.4), (5.15), and (5.16) give

$$\alpha\Sigma_{st} = \alpha \sum_{m=-\infty}^{\infty} \tilde{N}_{sm} \frac{I_m}{1-\eta_t I_m} N_{mt}$$

$$= -\pi\alpha\left(\frac{g}{b}\right)^2 \sum_{i=1}^{\infty} \frac{\mu_i}{(\pi\alpha\mu_i)^2 + x_s^2} \frac{1}{(\pi\alpha\mu_i)^2 + x_t^2} \frac{1 + 2\eta_t/j_{oi}^2}{\sinh \pi\mu_i} \cdot$$

$$\cdot \left[\cosh \pi\mu_i + (-)^{s+1}\cosh[\pi\mu_i(1-2\alpha)] + 2(-)^{s+1}\kappa(\pi\alpha\mu_i)^{-1}\sinh[\pi\mu_i(1-2\alpha)]\right]$$

$$+ \Delta_s \delta_{st}, \tag{5.18}$$

$$\Delta_s = \frac{1}{2f_s^2(g)} \frac{I_1(\Gamma_s b)}{\Gamma_s b I_o(\Gamma_s b) - \eta_t I_1(\Gamma_s b)} \tag{5.19}$$

We have neglected κ^2 in comparison with $(\pi\alpha\mu_i)^2$ in the coefficients of the hyperbolic cosines. The notation of (5.18) is defined in the following equations: μ_i in (5.17), (5.10), x_s in (3.41), (3.42), η_t as in (3.29), κ in (3.39), α in (3.56), Γ_s in (3.16), $f_s(g)$ in (3.57).

Since μ_i and x_s are approximately real for the values of p of interest, the denominator $(\pi\alpha\mu_i)^2 + x_s^2$ is nearly a sum of squares of real numbers, rather than the troublesome difference of squares that appeared in the original expression. The series converges cubically, and is quite easy to compute numerically.

The last term in (5.18), proportional to δ_{st}, is important in the analysis of the equations for the case of fairly deep cavities, because it is the only term that survives in the limit $b/d \to 0$. It is interesting that this limit is difficult to treat without the Watson-Sommerfeld transformation. One may draw an analogy to the use of that transformation in Regge's scattering theory.[31] There the transformation gives the asymptotic behavior, for $\cos\theta \to \infty$, of the sum of a series in Legendre polynomials, $P_\ell(\cos\theta)$. Here we get the asymptotic behavior, for $b \to 0$, of the sum of a series in Bessel function ratios, $I_1(\chi_m b)/\chi_m b I_o(\chi_m b)$.

ACKNOWLEDGEMENT

R. Warnock enjoyed the hospitality of the Theoretical Physics Group, Lawrence Berkeley Laboratory. His work was supported by the Director, Office of Energy Research, Office of High Energy and Nuclear Physics, Division of High Energy Physics of the U.S. Department of Energy under Contract No. W-7405-ENG-48.

APPENDIX A

INITIAL VALUE TERMS

We repeat the considerations of Section 3, allowing arbitrary initial values $[f(0), E_z(0), H_\phi(0)]$, but requiring infinite conductivity on the end walls of the cavities. Solving (3.5) by the method of variation of parameters, we find that (3.9) and (3.10) must be modified by adding to their summands the term

$$G_m(r) = \int_0^r u\,du\; g_m(u) R_o(\chi_m r, \chi_m u), \tag{A.1}$$

where

$$g_m(r) = -\frac{p}{c^2} E_{zm}(r,0) - \frac{\mu_o}{r}\frac{\partial}{\partial r}\left(rH_{\phi m}(r,0)\right). \tag{A.2}$$

Similarly, by solving (2.31) we find that (3.13) acquires the new term

$$L_m(r) + K_m r/2 \tag{A.3}$$

while (3.14) is augmented by

$$L_m(r) + K_m a^2/2r, \tag{A.4}$$

where

$$K_m = \frac{-ik_m q}{\chi_m^2}\int_{-\infty}^{\infty} f_m(v,0)\,dv, \tag{A.5}$$

$$L_m(r) = \frac{\varepsilon_o}{\chi_m^2}\left[p\frac{\partial G_m}{\partial r} - \frac{k_m^2}{r}\int_0^r u\,du\; E_{zm}(u,0) + \frac{p}{\varepsilon_o c^2} H_{\phi m}(r,0)\right] \tag{A.6}$$

In solving (2.31), one first has to allow an arbitrary solution γ/r of the homogeneous equation, in Region II. The requirement that the fields

satisfy all four Maxwell equations then determines γ to be zero. After an application of the continuity condition at $r = a$ the fields in Region II take the form

$$\hat{E}_z^{II}(r,z) = \sum_{m=-\infty}^{\infty} [A_m I_o(\chi_m r) - \chi_m a S_o(\chi_m r, \chi_m a) + G_m(r)] e^{ik_m z}, \quad (A.7)$$

$$\hat{H}_\phi^{II}(r,z) = \sum_{m=-\infty}^{\infty} \left[\frac{\varepsilon_o p}{\chi_m} A_m I_1(\chi_m r) - \varepsilon_o p S_1(\chi_m r, \chi_m a) F_m \right.$$

$$\left. + L_m(r) + K_m a^2/2r\right] e^{ik_m z}. \quad (A.8)$$

In Region III we now have $\kappa = 0$ (infinite end-wall conductivity), and the functions f_s of (3.43) reduce for all s to $\cos \alpha_s(z + g)$. We solve (3.15) by variation of parameters and then solve (2.31) to obtain

$$\hat{E}_z^{III}(r,z) = \sum_{s=0}^{\infty} [D_s R_o(\Gamma_s r, \Gamma_s d) + D_s' S_o(\Gamma_s r, \Gamma_s d) + \tilde{G}_s(r)] \cos \alpha_s(z + g), \quad (A.9)$$

$$\hat{H}_\phi^{III}(r,z) = \varepsilon_o p \sum_{s=0}^{\infty} [D_s R_1(\Gamma_s r, \Gamma_s d) + D_s' S_1(\Gamma_s r, \Gamma_s d)$$

$$+ \tilde{L}_s(r) + \tilde{K}_s a^2/2r] \cos \alpha_s(z + g), \quad (A.10)$$

where

$$\tilde{G}_s(r) = \int_b^r u\,du\, g_s(u) R_o(\Gamma_s r, \Gamma_s u), \quad (A.11)$$

$$g_s(r) = -\frac{p}{c^2} E_{zs}(r,0) - \frac{\mu_o}{r}\frac{\partial}{\partial r}(r H_{\phi s}(r,0)), \quad (A.12)$$

$$\tilde{L}_s(r) = \frac{\varepsilon_o}{\Gamma_s^2}\left[p\frac{\partial \tilde{G}_s}{\partial r} - \frac{\alpha_s^2}{r}\int_o^r u\,du\, E_{zs}(u, 0) + \frac{p}{\varepsilon_o c^2} H_{\phi s}(r,0)\right], \quad (A.13)$$

$$\tilde{K}_s = \frac{-\alpha_s q}{\Gamma_s^2}\int_{-\infty}^{\infty} f_s(v,0)\,dv. \quad (A.14)$$

Here $f_s(v,0)$ is the coefficient in a development of $f(z,v,0)$ in the functions $\sin \alpha_s(z + g)$. In deriving $\hat{H}_\phi^{III}$ from (2.31), one again has to allow a term γ/r, and this time γ is not zero (for the choice of particular solution of the inhomogeneous equation that we have found convenient). The requirement that the two Maxwell equations (2.29), (2.30) give the same $\hat{E}_{rs}$ determines γ. The field $E_r(r,0)$ is eliminated through Poisson's equation, as in (3.6).

Given the series (A.7)-(A.10), the remaining calculations for continuity and boundary conditions can be done in precise analogy to Section 3. The general form of the boundary condition is derived in Appendix B. On the cavity wall $r = d$ the boundary condition stated in terms of Fourier components is

$$\hat{E}_{zs}(d) = -\left(\frac{\mu p}{\sigma}\right)_c^{1/2} \hat{H}_{\phi s}(d) + \lambda_{sc}, \quad (A.15)$$

where the term λ_{sc} arises from the initial-value term of (B.12). Similarly, on the tube wall $r = b$,

$$\hat{E}_{zm}(b) = -\left(\frac{\mu p}{\sigma}\right)_t^{1/2} \hat{H}_{\phi m}(b) + \lambda_{mt}. \quad (A.16)$$

In place of (3.28) the condition (A.15) gives

$$D_s' = -(\eta_c/\Gamma_s b) D_s + J_s, \quad (A.17)$$

$$J_s = \Gamma_s d \left\{ \left(\frac{\mu p}{\sigma}\right)_c^{1/2} [\tilde{L}_s(d) + \frac{a^2}{2d} \tilde{K}_s] + \tilde{G}_s(d) - \lambda_{sc} \right\}. \qquad (A.18)$$

The continuity and boundary conditions at r = b now lead to our previous equations (3.66), (3.67) for $\bar{A}$ and $\bar{D}$, specialized to $\kappa = 0$ and augmented with terms $A^{(o)}$ and $RD^{(o)}$, respectively, on their right hand sides. With the argument p of all functions indicated explicitly, the latter terms have the form

$$A_m^{(o)}(p) = \alpha \sum_{s=0}^{\infty} N_{ms}[J_s(p) S_\sigma(\Gamma_{sp} b, \Gamma_{sp} d) + \tilde{G}_s(b,p)] - G_m(b,p)$$

$$+ \sum_{n=-\infty}^{\infty} (\delta_{mn} - \alpha V_{mn}) \left[-\left(\frac{\mu p}{\sigma}\right)_t^{1/2} (L_n(b,p) + \frac{a^2}{2b} K_n(p)) + \lambda_{nt}(p) \right], \qquad (A.19)$$

$$R_s(p) D_s^{(o)}(p) = R_s(p) \left[\frac{2}{1+\delta_{so}} \frac{1}{\varepsilon_o p b} \sum_{m=-\infty}^{\infty} N_{-ms} (L_m(b,p) + \frac{a^2}{2b} K_m(p)) \right.$$

$$\left. - \frac{1}{\varepsilon_o p b} [\tilde{L}_s(b,p) + \frac{a^2}{2b} \tilde{K}_s(p)] - \frac{J_s(p)}{\Gamma_{sp} b} S_1(\Gamma_{sp} b, \Gamma_{sp} d) \right]. \qquad (A.20)$$

The initial-value term in the Vlasov equation (2.22) must also be accounted for. Its effect is to modify the expression (4.10) for F_n by addition of a term

$$(1 + W_n)^{-1} F_n^{(o)} , \qquad (A.21)$$

where

$$F_n^{(o)}(p) = \frac{-q}{\chi_{np}^2} \int_{-\infty}^{\infty} dv\, f_n(v,0) \frac{pv + ik_n c^2}{p + ik_n v} . \qquad (A.22)$$

To see the implications of initial values for the rise time of instabilities, we must look at the p-plane analyticity properties of initial-value terms in the "self-consistent" equation (either equation (4.12) for the axial field or (4.24) for the cavity field). The complete inhomogeneous term of (4.24) is $R_s \bar{D}_s^{(o)}$, where

$$\bar{D}_s^{(o)} = D_s^{(o)} + \sum_{m=-\infty}^{\infty} N_{-ms} \left[\frac{I_m}{1-\eta_t I_m} + \frac{1}{(1-\eta_t I_m)^2} \left(\frac{a}{b}\right)^2 \frac{I_1(\chi_m a)}{\chi_m a I_o^2(\chi_m b)} \frac{W_m}{1+\theta_m W_m} \right] \cdot$$

$$\cdot [A_m^{(o)} + \alpha \eta_t (NvD^{(o)})_m]$$

$$+ \sum_{m=-\infty}^{\infty} N_{-ms} \frac{1}{1-\eta_t I_m} \left(\frac{a}{b}\right)^2 \frac{I_1(\chi_m a)}{\chi_m a I_o(\chi_m b)} \frac{1}{1+\theta_m W_m} \left[\frac{W_m E_{zom}}{p} - F_m^{(o)} \right] \qquad (A.23)$$

Despite the complicated appearance of (A.23) it is not too difficult to be convinced that it is analytic in the right half p-plane and consequently does not affect the rise time of an instability. It does have singularities on the imaginary axis, which appear to reflect the circumstance mentioned in Section 2; namely, that one cannot expect the field perturbations to vanish in the course of time.

To check analyticity of (A.23) we note that the required analyticity of the ingredients $D_s^{(o)}$, $A_m^{(o)}$, and $F_m^{(o)}$ follows easily from their definitions. It then remains to show that $1 - \eta_t I_m$ and $1 + \theta_m W_m$ have no zeros in the right half plane. A zero of the former would, by (4.19), imply a pole of ζ_{mn}, which has already been ruled out. Analysis of $1 + \theta_m W_m$ for particular choices of $f_o(v)$ (see Part II) suggests that its zeros are all in $\mathrm{Re}\, p \leq 0$, but a general proof may be difficult. We needn't be concerned, however, since $(1 + \theta_m W_m)^{-1}$

also occurs in the kernel of (4.24). A pole of $(1 + \theta_m W_m)^{-1}$ in (A.23) would be cancelled by a similar pole from the kernel, and would not appear in the solution $\bar{D}$. The same argument applies to the factor R_s in (4.24).

APPENDIX B

RESISTIVE WALL BOUNDARY CONDITIONS FOR THE LAPLACE TRANSFORM

We adapt the standard treatment[22] of resistive wall boundary conditions to accomodate the Laplace transform. We suppose that the wall is planar, obeys $\underline{J} = \sigma\underline{E}$, $\underline{D} = \varepsilon\underline{E}$, $\underline{B} = \mu\underline{H}$, and is substantially thicker than the skin depth for penetration of fields at the frequencies of interest. The unit normal pointing away from the wall is denoted by $\underline{n}$. We analyze fields inside the wall, supposing that they have relatively little variation in directions parallel to the wall; this is the essential assumption. Then if ξ is the distance from the surface to a point inside the wall, the gradient acting on any field may be written as $\nabla = -\underline{n}\partial/\partial\xi$. Laplace transformation of the Maxwell equations involving curls yields

$$\underline{n} \times \frac{\partial\hat{\underline{E}}}{\partial\xi} = \mu p\,\hat{\underline{H}} - \mu\underline{H}(0), \tag{B.1}$$

$$\underline{n} \times \frac{\partial\hat{\underline{H}}}{\partial\xi} = -(\sigma + \varepsilon p)\hat{\underline{E}} + \varepsilon\underline{E}(0). \tag{B.2}$$

Elimination of $\hat{\underline{E}}$ gives

$$\frac{\partial^2\hat{\underline{H}}}{\partial\xi^2} - \mu p(\sigma + \varepsilon p)\hat{\underline{H}} = \underline{g}, \tag{B.3}$$

$$\underline{g} = \frac{1}{p}\left(\underline{n} \cdot \frac{\partial^2\underline{H}(0)}{\partial\xi^2}\right)\underline{n} - \mu(\sigma + \varepsilon p)\underline{H}(0) - \varepsilon\underline{n} \times \frac{\partial\underline{E}(0)}{\partial\xi}. \tag{B.4}$$

By variation of parameters we find the general solution of (B.3) having exponential decrease for increasing ξ. It has the form

$$\hat{\underline{H}}(\xi) = \underline{a}\, e^{-\xi/\delta} - \frac{\delta}{2}\, e^{\xi/\delta}\int_{\xi}^{\infty}\underline{g}(x)e^{-x/\delta}dx - \frac{\delta}{2}\, e^{-\xi/\delta}\int_{0}^{\xi}\underline{g}(x)e^{x/\delta}dx, \qquad (B.5)$$

where

$$\delta = [\mu(\sigma + \varepsilon p)p]^{-1/2}, \qquad (B.6)$$

and $\underline{a}$ is an arbitrary constant vector. The branch of the square root in (B.6) is such that $\mathrm{Re}\,\delta^{-1} > 0$ when $\mathrm{Re}\,p > 0$. Equation (B.5) implies that $\hat{\underline{H}}$ satisfies the relation

$$\partial\hat{\underline{H}}/\partial\xi = -\frac{1}{\delta}\,\hat{\underline{H}} - e^{\xi/\delta}\int_{\xi}^{\infty}\underline{g}(x)e^{-x/\delta}dx. \qquad (B.7)$$

Substitution of (B.7) in (B.2) and evaluation of the resulting equation at $\xi = 0$ yields the relation between $\hat{\underline{H}}$ and $\hat{\underline{E}}$ that must hold at the surface:

$$\hat{\underline{E}} = \left[\frac{\mu p}{\sigma + p}\right]^{1/2} \underline{n}\times\hat{\underline{H}} + \underline{\lambda}, \qquad (\xi = 0), \qquad (B.8)$$

where

$$\underline{\lambda} = \frac{1}{\sigma + \varepsilon p}\left[\underline{E}(0) + \underline{n}\times\int_{0}^{\infty}\underline{g}(x)e^{-x/\delta}\,dx\right]_{\xi=0}$$

$$= \frac{1}{\sigma + \varepsilon p}\left[\varepsilon\underline{E}(0,0) - \underline{n}\times\int_{0}^{\infty}\left[\varepsilon\underline{n}\times\frac{\partial\underline{E}(0,\xi)}{\partial\xi} + \mu(\sigma + \varepsilon p)\underline{H}(0,\xi)\right]e^{-\xi/\delta}d\xi\right]. \qquad (B.9)$$

The component of Eq.(B.8) in the direction of $\underline{n}$ is of no interest, since it merely coincides with the corresponding component of (B.2). We may then write the tangential part of (B.8) as

$$\hat{\underline{E}}_{//} = \left[\frac{\mu p}{\sigma + p}\right]^{1/2} \underline{n}\times\hat{\underline{H}}_{//} + \underline{\lambda}_{//}, \qquad (B.10)$$

where, through an integration by parts, $\underline{\lambda}_{//}$ may be cast in the form

$$\underline{\lambda}_{//} = \int_{0}^{\infty}\left[\frac{\alpha\varepsilon}{\sigma + \varepsilon p}\,\underline{E}_{//}(0,\xi) - \mu\,\underline{n}\times\underline{H}_{//}(0,\xi)\right]e^{-\xi/\delta}d\xi. \qquad (B.11)$$

For the values of p of interest it is an excellent approximation to drop the displacement current by putting $\varepsilon = 0$. We then have the form of the boundary condition used in the foregoing work,

$$\hat{\underline{E}}_{//} = \left[\frac{\mu p}{\sigma}\right]^{1/2} \underline{n}\times\hat{\underline{H}}_{//} - \mu\int_{0}^{\infty}\underline{n}\times\underline{H}_{//}(0,\xi)e^{-\xi/\delta}d\xi. \qquad (B.12)$$

By using cylindrical coordinates and the appropriate Bessel functions, one can find a similar relation for a cylindrical surface. That refinement involves little extra effort; we have avoided it only to simplify notation.

REFERENCES

1. L. J. Laslett, V. K. Neil, and A. M. Sessler, Rev. Sci. Instr. 32, 276 (1961); V. K. Neil and A. M. Sessler, ibid. 32, 256 (1961).
2. E. Keil and B. Zotter, Particle Accelerators 3, 11 (1972).
3. E. Keil and B. Zotter, unpublished reports CERN-ISR-TH-70-30 and CERN-ISR-TH-70-33, European Organization for Nuclear Research, Geneva, 1970.
4. L. D. Landau, J. Phys. USSR 10, 25 (1946).
5. R. L. Warnock, G. R. Bart, and S. Fenster, IEEE Trans. Nucl. Sci. NS-28 , 2580 (1981).
6. M. Month and R. F. Peierls, Nucl. Instr. Meth. 137, 299 (1976).
7. E. Keil and E. Messerschmid, unpublished report CERN-ISR-TH-74-57, 1974.
8. P. Bramham, unpublished report CERN-ISR-RF/76-49, 1976.
9. B. Zotter and P. Bramham, IEEE Trans. Nucl. Sci. NS-20, 830 (1973).
10. A. Hofmann, unpublished report CERN-ISR-TH-80-35, 1980, presented at 11th International Conference on High Energy Accelerators, CERN, Geneva, 1980.
11. H. Hahn and S. Zatz, IEEE Trans. Nucl. Sci. NS-26, 3626 (1979).
12. H. G. Hereward, unpublished report CERN-ISR-DI/75-47, 1975.
13. F. J. Kriegler, F. E. Mills, and J. van Bladel, J. Appl. Phys. 35, 1721 (1964).
14. J. K. Trickett, Proceedings of 8th International Conference on High Energy Accelerators, CERN, Geneva, 1971, p. 345.
15. M. Chatard-Moulin and A. Papiernik, IEEE Trans. Nucl. Sci. NS-26, 3523 (1979).

16. S. Krinsky, Proceedings of 11th International Conference on High Energy Accelerators, CERN, Geneva, 1980.
17. R. K. Cooper and P. L. Morton, SLAC Informal Report, Stanford, April, 1980.
18. S. Krinsky and R. L. Gluckstern, IEEE Trans. Nucl. Sci., NS-28, 2621 (1981); unpublished report BNL-28373, Brookhaven National Laboratory, Upton, N. Y., 1980.
19. A. M. Sessler, IEEE Trans. Nucl. Sci. NS-18, 1039 (1971).
20. For instance, H. Hahn, Arch. f. Elek. Uebertrag. 32, 81 (1978); H. Hahn, C. I. Goldstein, and W. Bauer, ibid. 30, 297 (1976); H. Oraizi and J. Perini, IEEE Trans. Microwave Theory Tech. MTT-21, 640 (1973); O. R. Asfar and A. H. Nayfeh, ibid., MTT-23, 728 (1975).
21. A somewhat more general form of u leads to the same results, namely $u(\underline{r},\underline{v},t) = g(\underline{r}_\perp,\underline{v}_\perp)[f_o(v_z) + f_1(z,v_z,t)]$ where $\int g\, d^2v_\perp = \theta(a - r)$, $\int \underline{v}_\perp g d^2v_\perp = 0$. Substitution of this form in (2.1) and integration over $\underline{v}_\perp$ yields (2.3).
22. J. D. Jackson, Classical Electrodynamics, (Wiley, New York, 1962), §8.1.
23. It is not advisable to eliminate one of the quantities $\hat{J}$, $\hat{\rho}$ from (3.5) by using (3.3); that leads to unpleasant cancellations at a later stage.
24. M. M. Vainberg and V. A. Trenogin, Theory of Branching of Solutions of Nonlinear Equations (Noordhoff, Leyden, 1974), Theorem 1.2.
25. E. C. Titchmarsh, The Theory of Functions (Oxford Univ. Press, 1939), p. 116.

26. R. M. Young, An Introduction to Nonharmonic Fourier Series (Academic Press, New York, 1980), pp. 170, 196.

27. J. Fourier, The Analytical Theory of Heat, A. Freeman (trans.), (Cambridge Univ. Press, 1878), p. 311.

28. M. Planck, Theory of Heat, H. Brose (trans.), (MacMillan, New York, 1932), p. 161.

29. A. Sommerfeld, Partial Differential Equations of Physics, E. G. Straus (trans.), (Academic Press, New York, 1949).

30. G. N. Watson, Proc. Roy. Soc. (London) 95, 83 (1918).

31. V. de Alfaro and T. Regge, Potential Scattering (North-Holland, Amsterdam, 1965).

This work was supported by the Director, Office of Energy Research, Office of High Energy and Nuclear Physics, Division of High Energy Physics of the U.S. Department of Energy under Contract W-7405-ENG-48.

FIGURE CAPTION

Fig. 1: Cross-section of model vacuum chamber. The quantities σ_t, σ_e, σ_c are conductivities of various portions of the walls.

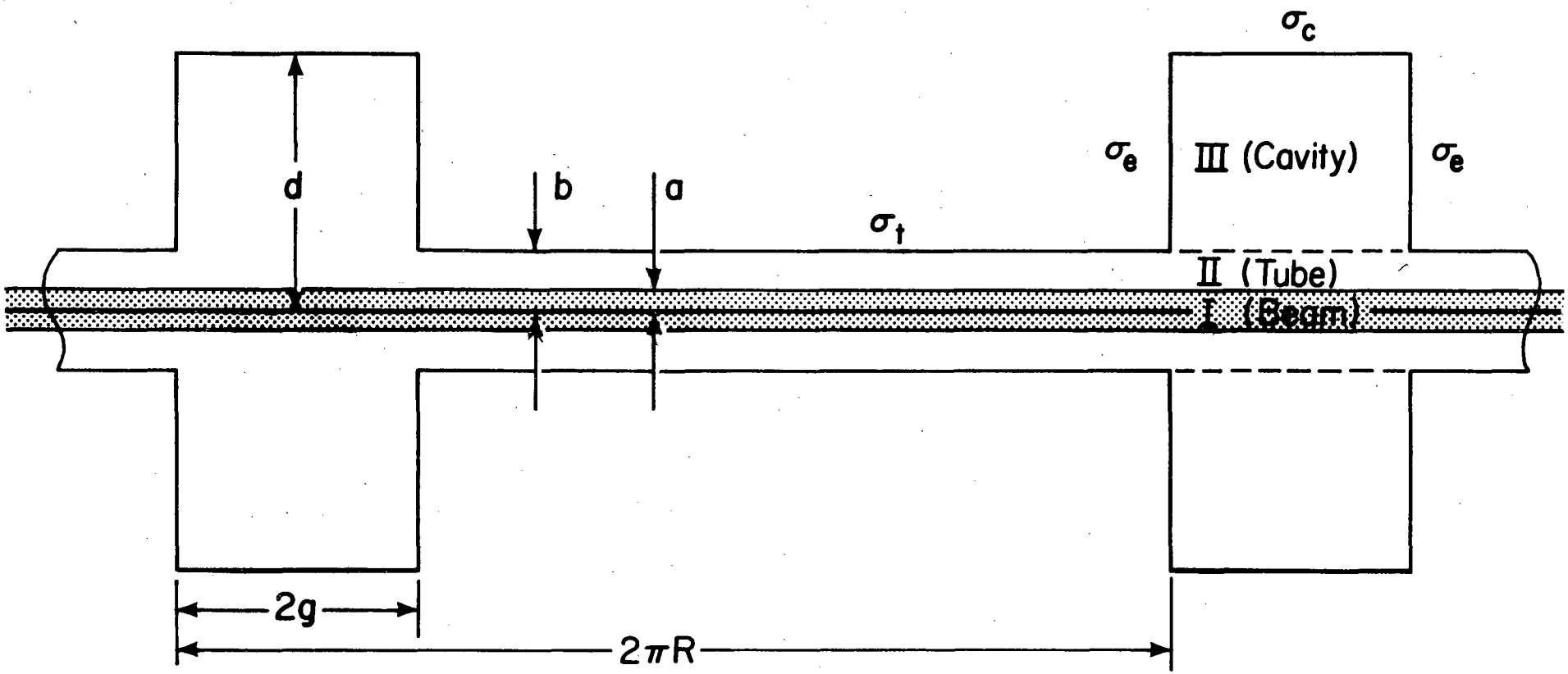

FIGURE 1

XBL 818-1244

This report was done with support from the Department of Energy. Any conclusions or opinions expressed in this report represent solely those of the author(s) and not necessarily those of The Regents of the University of California, the Lawrence Berkeley Laboratory or the Department of Energy.

Reference to a company or product name does not imply approval or recommendation of the product by the University of California or the U.S. Department of Energy to the exclusion of others that may be suitable.

TECHNICAL INFORMATION DEPARTMENT
LAWRENCE BERKELEY LABORATORY
UNIVERSITY OF CALIFORNIA
BERKELEY, CALIFORNIA 94720