RECEIVED
LAWRENCE
RADIATION LABORATORY

NOV 20 1972

LIBRARY AND
DOCUMENTS SECTION

Submitted to Nuclear
Instruments and Methods

LBL-1330
Preprint

MEASUREMENT OF TOTAL PARTICLE ENERGY IN A LARGE SOLID ANGLE DETECTOR

Donald Fredrickson, Jim Carroll, Michael Goitein,
Robert Kline, Burns Macdonald,
Victor Perez-Mendez, and Albert Stetz

October 1972

AEC Contract No. W-7405-eng-48

For Reference

Not to be taken from this room

LBL-1330

DISCLAIMER

This document was prepared as an account of work sponsored by the United States Government. While this document is believed to contain correct information, neither the United States Government nor any agency thereof, nor the Regents of the University of California, nor any of their employees, makes any warranty, express or implied, or assumes any legal responsibility for the accuracy, completeness, or usefulness of any information, apparatus, product, or process disclosed, or represents that its use would not infringe privately owned rights. Reference herein to any specific commercial product, process, or service by its trade name, trademark, manufacturer, or otherwise, does not necessarily constitute or imply its endorsement, recommendation, or favoring by the United States Government or any agency thereof, or the Regents of the University of California. The views and opinions of authors expressed herein do not necessarily state or reflect those of the United States Government or any agency thereof or the Regents of the University of California.

0 0 0 0 3 9 0 0 3 6 3

LBL 1330

MEASUREMENT OF TOTAL PARTICLE ENERGY IN A LARGE SOLID ANGLE DETECTOR

Donald Fredrickson, Jim Carroll, Michael Goitein, Robert Kline,*
Burns Macdonald, Victor Perez-Mendez,** and Albert Stetz

Lawrence Berkeley Laboratory
University of California
Berkeley, California

ABSTRACT

A large-area, thick plastic scintillation counter (60 cm × 60 cm × 10.65 cm) has been used to measure the energy of stopping ^{3}He nuclei. Energy resolution of the counter was 6% FWHM, independent of measured energy. The gain of the counter was electronically stabilized. Average pulse heights for monoenergetic particles varied 10% over the face of the counter, but we were able to correct for this non-uniformity to within 1% using position information from spark chambers. The effects of nuclear breakup on the pulse height distributing have been studied in detail.

1. INTRODUCTION

We describe the design and performance of a large plastic scintillation counter used to stop and measure the energy of ^{3}He particles. The counter was designed to meet the following criteria: large solid angle; large dynamic range in energy of the stopped particle; good energy resolution; and good energy stability. Similar results have been obtained with a smaller counter developed by the Northeastern University Group.[1,2]

2. CONSTRUCTION

2.1 Mechanical

An exploded view of the mechanical construction of the counter is shown in fig. 1. The active area of the counter, Pilot Y

---

*Also California Institute of Technology, Pasadena, California.
**Also University of California, San Francisco, California

scintillator,[1] was 60 cm × 60 cm × 10.65 cm thick, which is just thick enough to stop 430 MeV ^{3}He particles. The scintillator was epoxied to a light pipe, made of UVT Lucite, which was 45 cm in length. Both light pipe and scintillator were polished all over and double-annealed by Pilot. The scintillator was viewed by four 5-inch RCA 4522 photomultipliers via additional 5-inch long, 4.5-inch diameter cylindrical light pipes. This enabled each photomultiplier to be shielded with μ-metal, extending 5 inches beyond the photocathode. Each phototube was separated from its light pipe by a 1/16-inch air gap. The entire counter, except for the upper and lower ends, was wrapped with one layer of 1 mil aluminum followed by one layer of 2 mil aluminum. The non-active area of the counter was further wrapped with black paper and tape. The counter was supported by a rigid iron frame in order to minimize any non-uniform mechanical stressing of the scintillator. In addition, the frame of 1/4-inch iron doubled as an electromagnetic shield over the non-active area of the counter. At the lower end of the scintillator, the frame supported a front surface mirror of polished aluminum, which was separated from the scintillator by a 1/4-inch air gap. The mirror was used to improve the uniformity of response of the counter. The upper end of the light pipe, between the phototubes, was covered with black paper in order to reduce multiple end-to-end reflections.

2.2 Counter Electronics

Four RCA 4522 Bi-Alkalai photomultipliers were chosen for high quantum efficiency (approximately 28%) and uniformity of response over the photocathode. The 12th dynode of each photomultiplier was grounded so that the analog signal, which was to be pulse-height

analyzed, could be extracted via D.C. coupling. The remaining stages of the photomultiplier were used to further amplify the anode signal, which was used in the digital logic of the trigger system. Each phototube was driven by two separate HV supplies in this arrangement. Photomultiplier gains were balanced by passing a 462 MeV proton beam through the center of the counter. The voltages were approximately -1740 volts for the cathode, +280 volts for the anode. At this voltage the charge collected per tube at the 12th dynode was about 10^{-11} C for 375 MeV ^{3}He particles.

The gain of the system was stabilized by using an argon glow lamp[4] in conjunction with a digital gain stabilizer.[5] The details of the stabilizing system are shown in fig. 2. The stability of the argon lamp was checked against an Am^{241} source dissolved in Pilot-B scintillator, which was placed near the photocathode of an RCA 8575 photomultiplier situated between the two inner 5-inch phototubes. This phototube was positioned in such a way so as to simultaneously view the argon lamp and the source, thereby directly comparing the two. The lamp stability over a period of weeks was better than 1%.

3. PERFORMANCE

3.1 Response Map

Pulse height observed in the counter is a non-linear but well understood function of energy.[6,7] It is also a function of position in the counter. For this reason we mapped the counter in a 462 MeV proton beam which deposited 32 MeV of energy in the counter. The largest non-uniformity, 10% with respect to the center of the counter,

occurred near the end of the scintillator closer to the phototubes. Using our map in conjunction with position data from our spark chambers, we were able to correct for this non-uniformity of response to within 1%.

3.2 Energy Resolution

The counter was tested in a well-collimated, monochromatic (about 0.01% FWHM) ^{3}He beam at two energies: 69 MeV and 130 MeV. In addition, higher energy, tagged ^{3}He particles were obtained from the reaction $\alpha + p \rightarrow {}^3He + d$. Figure 3 shows a spectrum obtained by splitting the ^{3}He beam with a 6 mil copper foil so that half of the beam passed through the foil, while the other half missed. The energy resolution of the counter for 130 MeV ^{3}He particles was 6% FWHM. The resolution was also quite independent of energy. These results were puzzling, because previous tests of a smaller counter indicated that the resolution was limited by photostatistics. For the small counter the energy resolution for 130 MeV ^{3}He particles was 1.3% FWHM. We have not been able to account for this discrepancy.

3.3 Inefficiencies

A typical spectrum obtained by stopping a well-collimated, monochromatic ^{3}He beam shows a sharp peak from ^{3}He stopping by multiple Coulomb interactions and a broad continuum due to nuclear interactions and scintillator saturation effects, as shown in fig. 4. We fully anticipated a low energy tail but were quite surprised to find in addition a high energy tail, which we attribute to nuclear interactions in the scintillator that produce particles which ionize less heavily and consequently produce less saturation in the scintillator. The fraction

of counts in the tails, which are defined as all the counts lying below the dashed line in fig. 4, amounted to 6% at 130 MeV. Assuming a linear relationship between this fraction and range, this extrapolates to an "inefficiency" of 24% at a ^{3}He energy of 330 MeV, the highest energy we eventually measured in our experiment. The extrapolation was based on the data shown in fig. 5, where the fraction of counts in the tails is plotted as a function of range in the He counter. As the energy increases, the nuclear interaction probability becomes directly proportional to the range of the ^{3}He's being detected.

4. CONCLUDING REMARKS

Large scintillation counters, used in conjunction with wire spark chambers, provide a direct means of determining the energy of medium energy charged particles. Such a device can be used as a substitute for the traditional magnetic spectrometer system where large solid angle is required, provided resolution and efficiency are not of overriding significance.

We are grateful to Dr. David Hendrie and the 88" Cyclotron crew for setting up the ^{3}He beam for these tests. It is also a pleasure to thank James Vale and the 184" Cyclotron crew for providing us with the alpha beam and the 462 MeV proton beam. Finally, we acknowledge the helpful criticism of Professor C. A. Heusch.

Work done under the auspices of the United States Atomic Energy Commission.

REFERENCES

1. B. Gottschalk, Review of Scientific Instruments, 40 (1969) 22.

2. B. Gottschalk and S. L. Kannenberg, Nuclear Instruments and Methods, 97 (1971) 291.

3. Pilot Chemicals Inc., 36 Pleasant St., Waterton, Mass. 02172.

4. Q. A. Kerns and R. F. Tusting, UCRL-10895, July 1963.

5. Canberra Model 1500 Twin Digital Stabilizer.

6. R. L. Craun and D. L. Smith, Nuclear Instruments and Methods, 80 (1970) 239.

7. G. D. Badhwar, C. L. Deney, B. R. Dennis, and M. F. Kaplon, Nuclear Instruments and Methods, 57 (1967) 116.

FIGURE CAPTIONS

1. Exploded view, to scale, of the mechanical construction of the He counter.

2. He counter, showing details of the stabilizing system.

3. Pulse height spectrum for ^{3}He entering normal to the face at the counter center; half of the beam is covered by a 6 mil copper absorber.

4. Pulse height spectrum for ^{3}He showing high and low energy tails. The tails are defined as the counts lying below the dashed line.

5. Inefficiency as a function of range in the He counter.

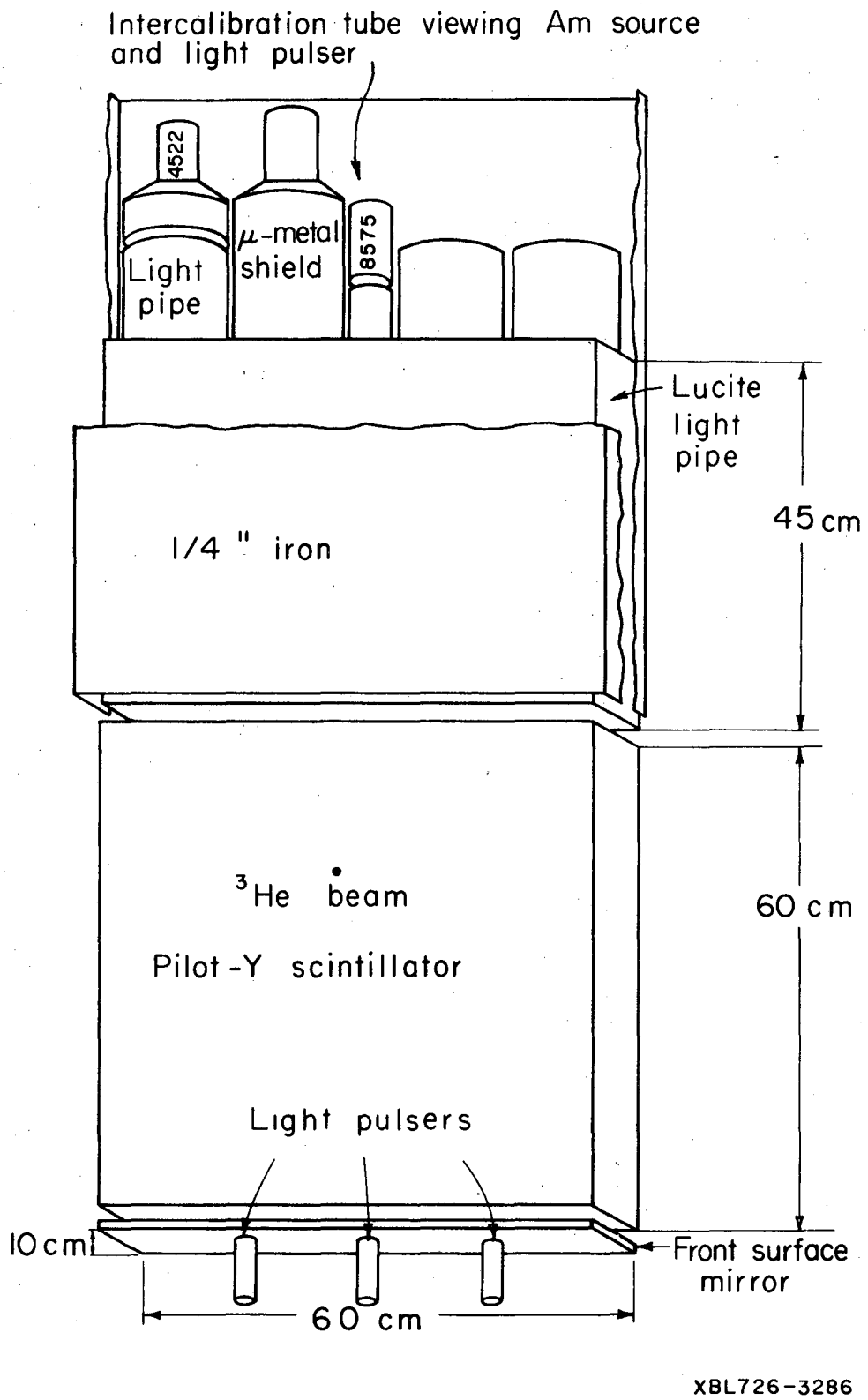
Intercalibration tube viewing Am source and light pulser
4522
Light pipe
μ-metal shield
8575
Lucite light pipe
45 cm
1/4 " iron
^{3}He beam
Pilot-Y scintillator
60 cm
Light pulsers
10 cm
Front surface mirror
60 cm
XBL726-3286

Fig. 1

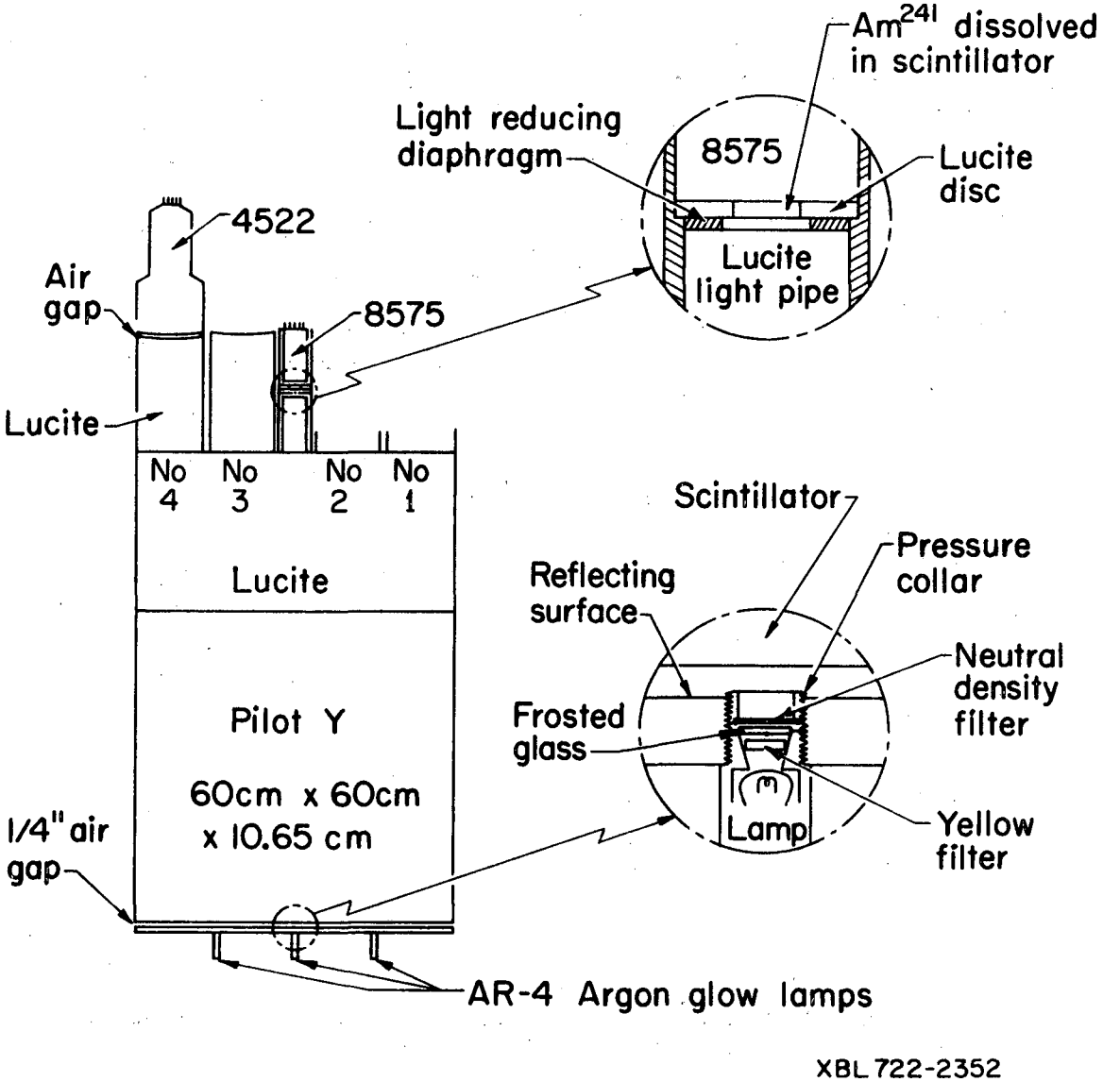
Am241 dissolved in scintillator
Light reducing diaphragm
8575
Lucite disc
Lucite light pipe
4522
Air gap
8575
Lucite
No 4
No 3
No 2
No 1
Lucite
Scintillator
Pressure collar
Reflecting surface
Neutral density filter
Frosted glass
Pilot Y
60cm x 60cm x 10.65 cm
Lamp
Yellow filter
1/4" air gap
AR-4 Argon glow lamps
XBL 722-2352

Fig. 2

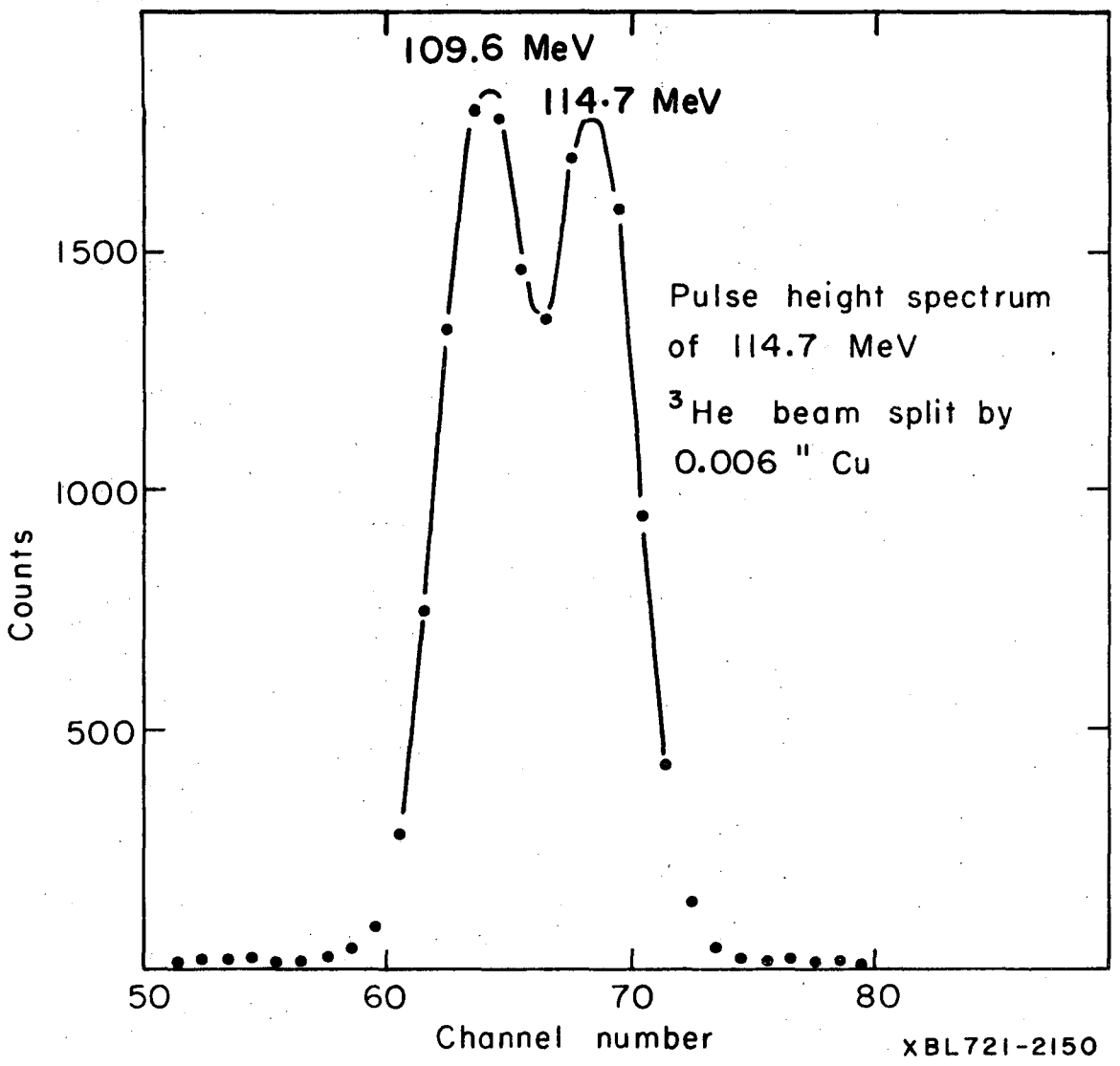
109.6 MeV
114.7 MeV
1500
1000
500
Counts
Pulse height spectrum
of 114.7 MeV
^{3}He beam split by
0.006 " Cu
50
60
70
80
Channel number
XBL721-2150

Fig. 3

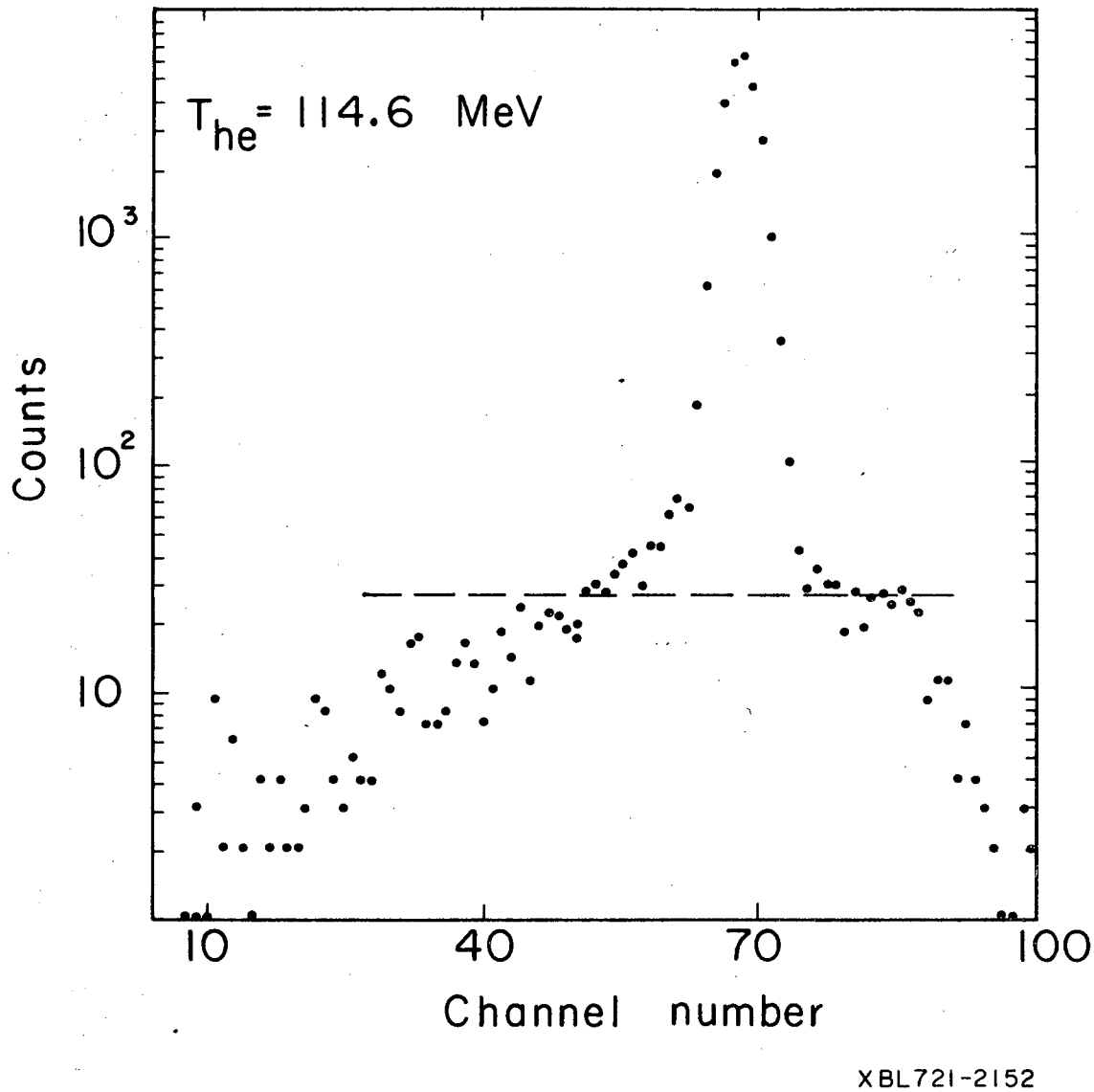
T_{he}= 114.6 MeV
Counts
10^3
10^2
10
10
40
70
100
Channel number
XBL721-2152

Fig. 4

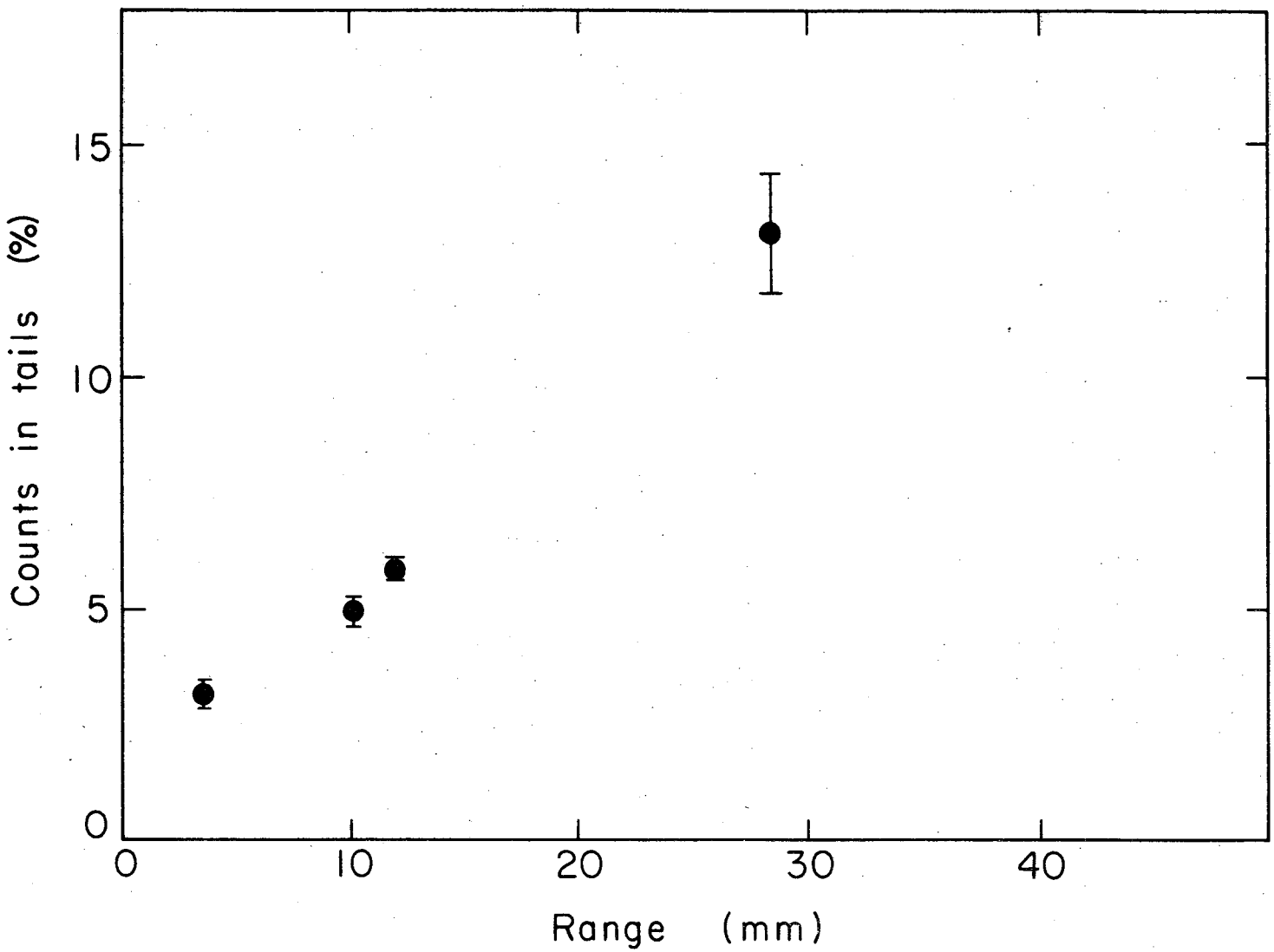

XBL729-4041

Fig. 5

LEGAL NOTICE

This report was prepared as an account of work sponsored by the United States Government. Neither the United States nor the United States Atomic Energy Commission, nor any of their employees, nor any of their contractors, subcontractors, or their employees, makes any warranty, express or implied, or assumes any legal liability or responsibility for the accuracy, completeness or usefulness of any information, apparatus, product or process disclosed, or represents that its use would not infringe privately owned rights.

TECHNICAL INFORMATION DIVISION
LAWRENCE BERKELEY LABORATORY
UNIVERSITY OF CALIFORNIA
BERKELEY, CALIFORNIA 94720