LBL-13414
Preprint

# Lawrence Berkeley Laboratory

UNIVERSITY OF CALIFORNIA

## Physics, Computer Science & Mathematics Division

Submitted for publication

RENORMALIZATION IN A SPONTANEOUSLY BROKEN CASE

Seichi Naito

October 1981

Prepared for the U.S. Department of Energy under Contract W-7405-ENG-48

LBL-13414 c.2

## DISCLAIMER

This document was prepared as an account of work sponsored by the United States Government. While this document is believed to contain correct information, neither the United States Government nor any agency thereof, nor the Regents of the University of California, nor any of their employees, makes any warranty, express or implied, or assumes any legal responsibility for the accuracy, completeness, or usefulness of any information, apparatus, product, or process disclosed, or represents that its use would not infringe privately owned rights. Reference herein to any specific commercial product, process, or service by its trade name, trademark, manufacturer, or otherwise, does not necessarily constitute or imply its endorsement, recommendation, or favoring by the United States Government or any agency thereof, or the Regents of the University of California. The views and opinions of authors expressed herein do not necessarily state or reflect those of the United States Government or any agency thereof or the Regents of the University of California.

October 1981 LBL-13414

# RENORMALIZATION IN A SPONTANEOUSLY BROKEN CASE*

Seichi Naito

Lawrence Berkeley Laboratory
and
Department of Physics
University of California
Berkeley, California 94720

and

Department of Physics
Osaka City University
Sumiyoshiku, Osaka
Japan

## ABSTRACT

Under the presence of mass term due to explicitly symmetry breaking $c\sigma$ term in $\sigma$ model, we directly renormalize spontaneously symmetry broken mode in a symmetric renormalization scheme, with the help of dimensional regularization method. Solution for the infinite resummation problem by Lee is found to be extremely simple within our formalism.

---

* This work was supported by the Director, Office of Energy Research, Office of High Energy and Nuclear Physics, Division of High Energy Physics of the U.S. Department of Energy under Contract No. W-7405-ENG-48.



## §I. INTRODUCTION AND PRELIMINARIES

Under the spontaneously broken chiral symmetry,[1] pions are Goldstone particles and originally massless nucleons get their finite masses satisfying Goldberger-Treiman relation. Since various soft pion theorems derived by using partially conserved axial vector current (PCAC) relation have been successful, spontaneous breakdown of chiral symmetry has been considered to be excellent success of our understanding of hadron physics. In order to understand PCAC relation concretely, Gell-Mann and Levy have introduced $\sigma$ model[1]

$$\mathcal{L} = \mathcal{L}_{sym} + m_o^2\sqrt{\frac{M_o^2+2m_o^2}{2\lambda_o}}\,\sigma \;(\text{for } \frac{m_o}{M_o} \ll 1), \tag{1.1}$$

where $\mathcal{L}_{sym}$ is given by

$$\begin{aligned}\mathcal{L}_{sym} \equiv & -\frac{1}{2}\,[(\partial_\mu\sigma)^2 + (\partial_\mu\pi_i)^2] \\ & + \frac{M_o^2}{4}\,[\sigma^2 + (\pi_i)^2] \\ & - \frac{\lambda_o}{4}\,[\sigma^2 + (\pi_i)^2]^2 . \quad (\lambda_o > 0)\end{aligned} \tag{1.2}$$

[Throughout this paper, we use the following notations: Greek index $\mu$ denotes component in ordinary space and varies from 1 to 4. Roman indices (i, j, k, $\ell$) denote components in isotopic space and vary from 1 to 3. Repeated indices are to be summed over.]

At the classical level, the minimum energy for the system given by $\mathcal{L}_{sym}$ is obtained in the case

$$\sigma = \sqrt{\frac{M_o^2 + 2m_o^2}{2\lambda_o}} \quad \text{and} \quad \pi_i = 0 \tag{1.3}$$

and $\pi$ has small mass $m_o$, while $\sigma$ has mass $\sqrt{M_o^2 + 3m_o^2}$.

The physical system (1.1) is quantized by imposing equal-time commutation relations (ETCR)

$$[\partial_4^x \sigma(\vec{x}, t), \sigma(\vec{y}, t)] = -\delta^3(\vec{x} - \vec{y}),$$

$$[\partial_4^x \pi_i(\vec{x}, t), \pi_j(\vec{y}, t)] = -\delta_{ij}\delta^3(\vec{x} - \vec{y})$$

and all other ETCR's among $(\pi, \sigma, \partial_4\pi, \partial_4\sigma)$ are equal to zero. In the Heisenberg representation, we have equations of motion for quantized field operators

$$\Box\pi_i(x) + \frac{M_o^2}{2}\pi_i(x) - \lambda_o\pi_i(x)\{\sigma^2 + \pi_j^2\}_x = 0 \tag{1.5}$$

and

$$\Box\sigma(x) + \frac{M_o^2}{2}\sigma(x) - \lambda_o\sigma(x)\{\sigma^2 + \pi_j^2\}_x + m_o^2\sqrt{\frac{M_o^2 + 2m_o^2}{2\lambda_o}} = 0, \tag{1.6}$$

where and hereafter we use a simplified notation

$$\{\sigma^2 + \pi_j^2\}_x \equiv \{[\sigma(x)]^2 + [\pi_j(x)]^2\}. \tag{1.7}$$

If we introduce isospin generators $Q_i$ and axial charge operators $Q_{5i}$ by

$$Q_i(t) \equiv i\varepsilon_{ijk}\int d^3x\pi_j(\vec{x}, t)\partial_4\pi_k(\vec{x}, t) \tag{1.8}$$

and

$$Q_{5i}(t) \equiv i\int d^3x\{\sigma(\vec{x}, t)\,\partial_4\pi_i(\vec{x}, t) - \pi_i(\vec{x}, t)\partial_4\sigma(\vec{x}, t)\}.$$



We find from (1.4) that $Q_i^{\pm} \equiv \frac{1}{2}[Q_i \pm Q_{5i}]$ are chiral SU(2) × SU(2) generators satisfying the following ETCR's

$$[Q_i(t), \pi_j(\vec{x}, t)] = i\varepsilon_{ijk}\,\pi_k(\vec{x}, t),$$

$$[Q_i(t), \sigma(\vec{x}, t)] = 0$$

and

$$[Q_{5i}(t), \pi_j(\vec{x}, t)] = -i\delta_{ij}\sigma(\vec{x}, t),$$

$$[Q_{5i}(t), \sigma(\vec{x}, t)] = i\pi_i(\vec{x}, t), \text{ etc.} \tag{1.10}$$

With the help of (1.10), $\mathcal{L}_{sym}$ in (1.2) is easily shown to be chiral invariant, i.e.,

$$[\mathcal{L}_{sym}, Q_i^{\pm}] = 0. \tag{1.11}$$

In the case of $m_o^2 = 0$, spontaneously broken vacuum state $|0>$ corresponding to the classical situation (1.3) is characterized by

$$<0|\pi_i|0> = 0 \quad \text{but} \quad <0|\sigma|0> \neq 0, \tag{1.12}$$

so that

$$Q_i|0> = 0 \quad \text{but} \quad Q_{5i}|0> \neq 0. \tag{1.13}$$

In Sec. 2 we derive an integral equation for covariant Green's functions having two expansion parameters "a" and "h", and obtain Ward identities valid for any value of "a" and "h". In Sec. 3 we derive a generating functional for covariant Green's functions and

show the meaning of expansions in a power series of "a" and "h". In Sec. 4 we prove renormalizability (in spontaneously broken case) in a power series expansion in "a" (not in "h"), by minimally subtracting ultraviolet divergent terms. In Sec. 4, we discuss analytic continuation of "a" along the real axis in the complex plane, and give the prescription how renormalized Green's functions at a = 1 can be effectively calculated. In Sec. 5 we discuss our results.



## §2. INTEGRAL EQUATIONS FOR CONVARIANT GREEN'S FUNCTIONS AND WARD IDENTITIES

In this section, we will derive integral equations (having two parameters "a" and "h") for covariant Green's functions and Ward identities valid for any "a" and "h".

In order to investigate quantum system (1.4)-(1.7), it is more covenient to treat the covariant Green's functions

$$< 0|T^*\{\pi_i(x)\ldots\partial_4^y\pi_j(y)\ldots\sigma(v)\ldots\partial_4^w\sigma(w)\}|0 > \tag{2.1}$$

than the non-convariant time-ordered products

$$< 0|T\{\pi_i(x)\ldots\partial_4^y\pi_j(y)\ldots\sigma(v)\ldots\partial_4^w\sigma(w)\}|0 > . \tag{2.2}$$

The general definitions[2] of (2.1) in terms of (2.2) may be easily imagined from the following special example: The two-point covariant Green's functions (2.1) are the same as the corresponding (2.2), except for

$$< 0|T^*\{\partial_4^x\pi_i(x)\partial_4^y\pi_j(y)\}|0 >$$

$$\equiv < 0|T\{\partial_4^x\pi_i(x)\partial_4^y\pi_j(y)\}|0 > - i\delta_{ij}\delta^4(x-y)$$

and

$$< 0|T^*\{\partial_4^x\sigma(x)\partial_4^y\sigma(y)\}|0 >$$

$$\equiv < 0|T\{\partial_4^x\sigma(x)\partial_4^y\sigma(y)\}|0 > - i\delta^4(x-y). \tag{2.3}$$

Then our (1.4)-(1.6) are found to give the infinite set of covariant differential equations among (2.1). In order to express these expressions compactly, we introduce Mandelstam's operators[2-5] $\tilde{\pi}_i$, $\partial_4\tilde{\pi}_j$, $\tilde{\sigma}$ and $\partial_4\tilde{\sigma}$ acting on a linear space of the covariant Green's functions by the definition

$$(H|\tilde{\pi}_i(x)\ldots\partial_4^y\tilde{\pi}_j(y)\ldots\tilde{\sigma}(v)\ldots\partial_4^w\tilde{\sigma}(w)|G)$$

$$\equiv \langle 0|T^*\{\pi_i(x)\ldots\partial_4^y\pi_j(y)\ldots\sigma(v)\ldots\partial_4^w\tilde{\sigma}(w)\}|0\rangle. \qquad (2.4)$$

Then our results can be expressed as follows.[2]

$$0 = [\Box\tilde{\pi}_i(x) + \frac{M_0^2}{2}\tilde{\pi}_i(x) - \lambda_0\tilde{\pi}_i(x)\{\tilde{\sigma}^2 + \tilde{\pi}_j^2\}_x - i\zeta_{\pi_i}(x)]|G) \qquad (2.5)$$

and

$$0 = [\Box\tilde{\sigma}(x) + \frac{M^2}{2}\tilde{\sigma}(x) - \lambda_0\tilde{\sigma}(x)\{\tilde{\sigma}^2 + \tilde{\pi}_j^2\}_x + m_0^2\sqrt{\frac{M_0^2+2m_0^2}{2\lambda_0}} - i\zeta_\sigma(x)]|G), \qquad (2.6)$$

where (and hereafter) we use the shorthand convention (1.7) and

$$(H|\zeta_{\pi_i} = (H|\zeta_\sigma = 0,$$

$$[\tilde{\pi}_i(x),\zeta_{\pi_j}(y)] = \delta_{ij}\delta^4(x-y),$$

$$[\tilde{\sigma}(x),\zeta_\sigma(y)] = \delta^4(x-y)$$

$$[\tilde{\pi}_i(x),\zeta_\sigma(y)] = [\tilde{\sigma}(x),\zeta_{\pi_j}(y)] = 0. \qquad (2.7)$$



In order to investigate Green's functions in the spontaneously broken case, we first consider the following integral equations derived from (2.5) and (2.6):

$$0 = [\tilde{\sigma}(x) - \sqrt{\frac{M_0^2+2m_0^2}{2\lambda_0}} + i\int d^4y\, D^{m_0}(x-y)\{(\frac{M_0^2}{2} + m_0^2)\tilde{\sigma}$$

$$- \lambda_0\tilde{\sigma}(\tilde{\sigma}^2 + \tilde{\pi}_j^2) - i\zeta_\sigma\}_y]|G) \qquad (2.8)$$

and

$$0 = [\tilde{\pi}_i(x) + i\int d^4y D^0(x-y)\{\frac{M_0^2}{2}\tilde{\pi}_i - \lambda_0\tilde{\pi}_i(\tilde{\sigma}^2 + \tilde{\pi}_j^2) - i\zeta_{\pi_i}\}_y]|G), \qquad (2.9)$$

where

$$D^m(x) \equiv \frac{1}{(2\pi)^4 i}\int d^4p\, e^{ipx}\frac{1}{p^2+m^2-i\varepsilon}. \qquad (2.10)$$

For the sake of renormalization procedures, we prepare following equations having two dimensionless parameters "a" and "h":

$$0 = [\tilde{\sigma}^R - a\sqrt{\frac{M^2+2m^2}{2\lambda}} + i\int d^4y\, D^m(x-y)\{(Z_W-1)\Box\tilde{\sigma}^R$$

$$+ a^2\frac{M^2}{2}Z_M\tilde{\sigma}^R + a^2m^2\tilde{\sigma}^R - \lambda Z_\lambda\tilde{\sigma}^R[\{\tilde{\sigma}^R\}^2 + \{\tilde{\pi}_j^R\}^2]$$

$$- iah\zeta_\sigma^R\}_y]|G^R)_{ah} = 0 \qquad (2.11)$$

and

$$0 = [\tilde{\pi}_i^R + i\int d^4yD^0(x-y)\{(Z_W-1)\Box\tilde{\pi}_i^R + a^2\frac{M^2}{2}Z_M\tilde{\pi}_i^R$$

$$+ (a^2-1)m^2\tilde{\pi}_i^R - \lambda Z_\lambda\tilde{\pi}^R[\{\tilde{\sigma}^R\}^2 + \{\tilde{\pi}_j^R\}^2] - iah\zeta_{\pi_i}^R\}_y]|G^R)_{ah}. \qquad (2.12)$$

It is easily shown that the above $|G^R)_{ah}$ satisfies

$$0 = \{Z_W \Box\tilde{\sigma}^R + \frac{1}{2}M^2a^2Z_M\tilde{\sigma}^R + m^2(a^2-1)\tilde{\sigma}^R$$

$$- \lambda Z_\lambda\tilde{\sigma}^R[\{\tilde{\sigma}^R\}^2 + \{\pi_j^R\}^2] + m^2\sqrt{\frac{M^2+2m^2}{2\lambda}}\, a-iah\zeta_\sigma^R\}_x |G^R)_{ah} \quad (2.13)$$

and

$$0 = \{Z_W \Box\tilde{\pi}_i^R + \frac{1}{2}M^2a^2Z_M\tilde{\pi}_i^R + m^2(a^2-1)\tilde{\pi}_i^R$$

$$- \lambda Z_\lambda\tilde{\pi}_i^R[\{\tilde{\sigma}^R\}^2 + \{\tilde{\pi}_j^R\}^2] - iah\, \zeta_{\pi_i}^R\}_x |G^R)_{ah} . \quad (2.14)$$

It is very important that (2.13) and (2.14) in the case a = h = 1 can be rewritten into (2.5) and (2.6) provided that

$$\tilde{\sigma} \equiv Z_W^{\frac{1}{2}}\tilde{\sigma}^R, \qquad \zeta_\sigma \equiv Z_W^{-\frac{1}{2}}\zeta_\sigma^R ,$$

$$\tilde{\pi}_i \equiv Z_W^{\frac{1}{2}}\tilde{\pi}_i^R, \qquad \zeta_{\pi_i} \equiv Z_W^{-\frac{1}{2}}\zeta_{\pi_i}^R,$$

$$M_0^2 \equiv Z_M Z_W^{-1}M^2, \quad \lambda_0 \equiv Z_\lambda Z_W^{-2}\lambda$$

and

$$m_0^2\sqrt{\frac{M_0^2+2m_0^2}{2\lambda_0}} \equiv Z_W^{-\frac{1}{2}}\, m^2\sqrt{\frac{M^2+2m^2}{2\lambda}} . \quad (2.15)$$

This fact means that

$$|G) = |G^R)_{a=1,\ h=1}, \quad (2.16)$$

so that physical Green's functions satisfying (2.5) and (2.6) can be obtained from $|G^R)_{ah}$ by setting a = h = 1.



Multiplying (2.13) [(2.14)] by $\tilde{\pi}_i^R[\tilde{\sigma}^R]$ and then subtracting each other, we obtain

$$ahi\{\tilde{\sigma}^R(x)\zeta_{\pi_i}^R(x) - \tilde{\pi}_i^R(x)\zeta_\sigma^R(x)\}\ |G^R)_{ah}$$

$$+ m^2\sqrt{\frac{M^2+2m^2}{2\lambda}}\ a\tilde{\pi}_i^R(x)\ |G^R)_{ah}$$

$$= Z_W\partial_\mu^x\{\tilde{\sigma}^R(x)\partial_\mu^x\tilde{\pi}_i^R(x) - \tilde{\pi}_i^R(x)\partial_\mu^x\tilde{\sigma}^R(x)\}|G^R)_{ah} . \quad (2.17)$$

Integrating (2.17) over space time, and using the fact that surface terms vanish because of the absence of any massless particle in the explicitly symmetry breaking system $|G^R)_{ah}$, we finally obtain Ward identities (WI) in the form

$$h\tilde{Q}_{5i}^R|G^R)_{ah} = - m^2\sqrt{\frac{M^2+2m^2}{2\lambda}} \int d^4x\ \tilde{\pi}_i^R(x)|G^R)_{ah}, \quad (2.18)$$

where $\tilde{Q}_{5i}^R$'s are defined by

$$\tilde{Q}_{5i}^R \equiv i \int d^4x\ \{\tilde{\sigma}^R(x)\zeta_{\pi_i}^R(x) - \tilde{\pi}_i^R(x)\ \zeta_\sigma^R(x)\} , \quad (2.19)$$

which are axial charge generators acting[4] on a linear space of covariant Green's functions, so that we have

$$[\tilde{Q}_{5i}^R,\ \tilde{\pi}_j^R(x)] = - i\delta_{ij}\tilde{\sigma}^R(x)$$

and

$$[\tilde{Q}_{5i}^R,\ \tilde{\sigma}^R(x)] = i\tilde{\pi}_i^R(x). \quad (2.20)$$

It is important that WI (2.18) is valid for any value of "a" and "h".

## §3. GENERATING FUNCTIONAL

In this section, we will derive a generating functional for covariant Green's functions satisfying (2.11) and (2.12). [Throughout this paper, we use dimensional regularization method.[6]] Finally, we show the meaning of a power of "a" and "h" in Feynman diagrams.

We multiply (2.11) and (2.12) by

$$\exp\{\frac{-i}{ah}\int d^4x\, \tilde{\mathcal{L}}'_{int}(x)_{ah}\} \tag{3.1}$$

with

$$\begin{aligned}\tilde{\mathcal{L}}'_{int}(x)_{ah} \equiv & -\frac{1}{2}(Z^W-1)\{(\partial_\mu\tilde{\sigma}^R)^2 + (\partial_\mu\tilde{\pi}^R_j)^2\}_x \\ & + a^2(\frac{M^2}{4}Z_M + \frac{m^2}{2})\{(\tilde{\sigma}^R)^2 + (\tilde{\pi}^R_j)^2\}_x \\ & - \frac{m^2}{2}\{(\tilde{\pi}^R_j)^2\}_x \\ & - \frac{\lambda}{4}Z_\lambda\{(\tilde{\sigma}^R)^2 + (\tilde{\pi}^R_j)^2\}^2_x,\end{aligned} \tag{3.2}$$

and then this factor (3.1) is moved to the rightward by using (2.7) and (2.15), so as to operate directly on $|G^R)_{ah}$. Thus we find

$$0 = [\tilde{\sigma}^R(x) - a\sqrt{\frac{M^2+2m^2}{2\lambda}} - ah\int d^4y\, D^m(x-y)\zeta^R_\sigma(y)]|G^R_0)_{ah} \tag{3.3}$$

and

$$0 = [\tilde{\pi}^R_i(x) - ah\int d^4y\, D^0(x-y)\zeta^R_{\pi_i}(y)]|G^R_0)_{ah}, \tag{3.4}$$

where

$$|G^R_0)_{ah} \equiv \exp\{-\frac{i}{ah}\int d^4x\, \tilde{\mathcal{L}}'_{int}(x)_{ah}\}|G^R)_{ah}. \tag{3.5}$$



With the help of generating functional defined by[2,5]

$$\begin{aligned}& W^R_0[J^R_\sigma, J^R_\pi]_{ah} \\ & \equiv (H|\exp[\int d^4x\{J^R_{\pi_i}(x)\tilde{\pi}^R_i(x) + J^R_\sigma(x)\tilde{\sigma}^R(x)\}]|G^R_0)_{ah}.\end{aligned} \tag{3.6}$$

Equations (3.3) and (3.4) can be solved in the form

$$\begin{aligned}W^R_0[J^R_\sigma, J^R_\pi]_{ah} = \exp\{&\frac{ah}{2}\int d^4x\, d^4y[J^R_{\pi_i}(x)D^0(x-y)J^R_{\pi_i}(y) \\ & + J^R_\sigma(x)D^m(x-y)J^R_\sigma(y)] + \sqrt{\frac{M^2+2m^2}{2\lambda}}\, a\int d^4z\, J^R_\sigma(z)\}.\end{aligned} \tag{3.7}$$

Then we obtain from (3.5) and (3.7)

$$\begin{aligned}& W^R[J^R_\sigma, J^R_\pi]_{ah} \\ & \equiv (H|\exp[\int d^4x\{J^R_{\pi_i}(x)\tilde{\pi}^R_i(x) + J^R_\sigma(x)\tilde{\sigma}^R(x)\}]|G^R)_{ah} \\ & = \exp\{\frac{i}{ah}\int d^4z\, \mathcal{L}'_{int}[\delta/\delta J^R_\sigma(z), \delta/\delta J^R_{\pi_i}(z)]_{ah}\} \\ & \cdot \exp\{\frac{ah}{2}\int d^4x\, d^4y[J^R_{\pi_i}(x)D^0(x-y)J^R_{\pi_i}(y) \\ & + J^R_\sigma(x)D^m(x-y)J^R_\sigma(y)] + \sqrt{\frac{M^2+2m^2}{2\lambda}}\, a\int d^4z\, J^R_\sigma(z)\},\end{aligned} \tag{3.8}$$

where

$$\mathcal{L}'_{int}[\delta/\delta J^R_\sigma(z),\ \delta/\delta J^R_{\pi_i}(z)]_{ah}$$

$$\equiv -\frac{1}{2}(Z_W-1)[\{\delta/\delta\partial_\mu J_\sigma{}^R(z)\}^2 + \{\delta/\delta\partial_\mu J^R_{\pi_j}(z)\}^2]$$

$$+ a^2(\frac{M^2}{4}Z_M + \frac{m^2}{2})[\{\delta/\delta J^R_\sigma(z)\}^2 + \{\delta/\delta J^R_{\pi_j}(z)\}^2]$$

$$-\frac{\lambda}{4} Z_\lambda[\{\delta/\delta\ J^R_\sigma(z)\}^2 + \{\delta/\delta J^R_{\pi_j}(z)\}^2]^2$$

$$-\frac{m^2}{2}\{\delta/\delta J^R_{\pi_j}(z)\}^2. \qquad (3.9)$$

In a power series expansions of "a", it is more convenient to absorb the last mass vertices in the right hand side of (3.9) into propagators of $\pi$, so that $\pi$'s get mass m. Then we obtain from (3.8)

$$W^R[J^R_\sigma,\ J^R_\pi]$$

$$= \exp\{\frac{i}{ah}\int d^4z\ \mathcal{L}_{int}[\delta/\delta J^R_\sigma(z),\ \delta/\delta J^R_{\pi_i}(z)]_{ah}\}$$

$$\cdot \exp\{\frac{ah}{2}\int d^4x\ d^4y[J^R_{\pi_i}(x)D^m(x-y)J^R_{\pi_i}(y)$$

$$+ J^R_\sigma(x)\ D^m(x-y)J^R_\sigma(y)] + \sqrt{\frac{M^2+2m^2}{2\lambda}}\ a\int d^4z\ J^R_\sigma(z)\}, \qquad (3.10)$$

where $\mathcal{L}_{int}$ [ ] is a <u>chiral SU(2) × SU(2) invariant interaction</u> given by

$$\mathcal{L}_{int}[\delta/\delta J^R_\sigma(z),\ \delta/\delta J^R_{\pi_i}(z)]_{ah}$$

$$\equiv \mathcal{L}'_{int}[\ \delta/\delta J^R_\sigma(z),\ \ \delta/\delta J^R_{\pi_i}(z)]_{ah} + \frac{m^2}{2}\{\delta/\delta J^R_{\pi_j}(z)\}^2. \qquad (3.11)$$



The presence of

$$a\sqrt{\frac{M^2+2m^2}{2\lambda}}\ \int d^4z\ J^R_\sigma(z) \qquad (3.12)$$

in (3.8) and (3.10) is typical of our formulation. For this (3.12) to have well defined meaning, it is necessary that the $\sigma$'s propagator $D^m$ in (2.11) has nonvanishing mass, so that we must work under the presence of explicitly symmetry breaking term. [In other words, the term $m^2\sqrt{\frac{M^2+2m^2}{2\lambda}}\ \sigma$ plays the role of regularizing the spontaneously broken system.]

In Fig. 1, we draw all vertices appearing in Feyman diagrams obtained from (3.10).

Figure 1

Vertices of types (a) and (b) exist in (3.11), while lines $\multimap$ (in (e) - (f)) with small bubbles at the end represent the effect of (3.12), so that <u>no</u> propagators are attached to those lines. On the other hand, when lines with arrows $\rightarrowtail$ in Fig. 1 appear in Feynman diagrams, they always accompany propagators $D^m(m\neq 0)$ in (2.10). [Incidentally, we can neglect vertices of type (f), since we are concerned only with $W^R[J^R]/W^R[0]$, hereafter.]

Consider a connected Feynman diagram consisting of E external lines, I internal lines and $V_a(V_b,\ V_c,\ V_d$ and $V_e)$ vertices of type (a) [(b), (c), (d) and (e), respectively]. Then the diagram in question is found to be of order

$$(ah)^{E+L-1}a^{2V_a+V_s}, \qquad (3.13)$$

where we have used that the number L of closed loops in this diagram is given by

$$L = I + 1 - V_a - V_b - V_c - V_d - V_e \tag{3.14}$$

and the total number $V_s$ of spurious lines (—o) is given by

$$V_s = V_c + 2V_d + 3V_e . \tag{3.15}$$

Since $V_s$ appears in (3.13), it is convenient to explicitly draw lines —o, in much the same way as we draw E external lines, and both $E + V_s$ lines would be referred to as <u>generalized external lines</u>. Then diagrams can be defined to be one particle irreducible (or "<u>proper</u>") in the case when there does not exist one particle propagator $D^m$ in any single line of <u>generalized</u> external lines.



## §4. RENORMALIZATION[7]

We shall prove that we can obtain ultraviolet convergent Green's functions

$$(H|\tilde{\pi}_i^R(x)\ldots\tilde{\sigma}^R(y)|G^R)_{ah} \tag{4.1}$$

by using (3.9)-(3.11), provided that we properly choose divergent Z factors [in (3.9)] in a power series of "a" and "h" as

$$Z_W - 1 = \lim_{n\to\infty} \{Z_W(n)-1\} = \lim_{n\to\infty} \{ \sum_{i=1}^{n} (ah)^i z_{W,i}\},$$

$$Z_M - 1 = \lim_{n\to\infty} \{Z_M(n)-1\} = \lim_{n\to\infty} \{ \sum_{i=-1}^{n} (ah)^i [h^2 x_{M,i} + y_{M,i}]\}$$

and

$$Z_\lambda - 1 = \lim_{n\to\infty} \{Z_\lambda(n)-1\} = \lim_{n\to\infty} \{ \sum_{i=1}^{n} (ah)^i z_{\lambda,i}\}. \tag{4.2}$$

First, we introduce equations (2.x)' and (3.y)', which would be obtained by replacing both suffices R and factors Z's [in original (2.x) and (3.y)] with Rn and Z(n)'s in (4.2). As the assumption of mathematical induction, we assume that Z(n)'s have already been determined in order for (3.9)' - (3.11)' to give ultraviolet <u>finite</u> Green's functions

$$(H|\tilde{\pi}_i^{Rn}(x)\ldots\tilde{\sigma}^{Rn}(y)|G^{Rn})_{ah} \tag{4.3}$$

<u>up to order $a^{3+n}$</u>. Green's functions (4.3) are ultraviolet divergent at order $a^{4+n}$. This situation can be analyzed in the following way.

Superficial degree D of ultraviolet divergence of proper diagrams is given by

$$D = 4 - (E + V_s + 2V_a). \tag{4.4}$$

Therefore, in order to analyze ultraviolet divergences of order $a^{4+n}$, we have only to study Green's functions for $E \leqslant 4$ (and $E + V_s \leqslant 4$). With the help of generalized external lines, we can factorize divergent parts of order $a^{4+n}$ (for $1 \leqslant E \leqslant 4$) as diagramatically shown in Fig. 2

Figure 2

In Fig. 2, $\Gamma$'s are proper 4 point vertices, and we shall call $\Sigma$ pseudo self energy part. We find from (3.13) and (4.4) that ultraviolet divergence D = 2 of order $a^{4+n}$ in $\Sigma$ originates from (n+3) loops contributions, while D = 0 divergences of order $a^{4+n}$ in $\Sigma$ and $\Gamma$ come from (n+1) loops contributions. First we consider the amplitude $(H|\tilde{\sigma}^{Rn}(x)|G^{Rn})_{ah}$. From Fig. 2(a) we find that dimensionally ultraviolet divergent terms (DUV)[8] like $(n-4)^{-1}$, $(n-4)^{-2}$, etc. (where n is the dimension of space time,) can be subtracted away by chiral SU(2) × SU(2) invariant counter terms

$$\mathcal{L}_1(z) = \frac{M^2}{4}(ah)^{n+1}(h^2 x_{Mn+1} + y_{Mn+1})\{[\delta/\delta J_\sigma^{Rn}(z)]^2 + [\delta/\delta J_{\pi_j}^{Rn}(z)]^2\} \tag{4.5}$$

and

$$\mathcal{L}_2(z) = -\frac{\lambda}{4}(ah)^{n+1} z_{\lambda n+1}\{[\delta/\delta J_\sigma^{Rn}(z)]^2 + [\delta/\delta J_{\pi_j}^{Rn}(z)]^2\}^2,$$



respectively. In (4.5) and (4.6), $x_{M,n+1}(y_{M,n+1})$ corresponds to D = 2 (D = 0) and we have taken advantage of the fact that we can freely add counter terms involving $\delta/\delta J_{\pi_i}^{Rn}(z)$, without violating the finiteness (up to order $a^{4+n}$) of transition amplitude (from $\sigma$ to vacuum) obtained by calculating

$$\exp[\frac{i}{ah}\int d^4z\{\mathcal{L}_1(z) + \mathcal{L}_2(z)\}]\cdot W^{Rn}[J_\pi^{Rn}, J_\sigma^{Rn}]_{ah}$$

$$= (H|\exp[\int d^4x\{J_{\pi_i}^{Rn}(x)\tilde{\pi}_i^{Rn}(x) + J_\sigma^{Rn}\tilde{\sigma}^{Rn}(x)\}]|G_t^{Rn})_{ah}, \tag{4.7}$$

where

$$|G_t^{Rn})_{ah} \equiv \exp[\frac{i}{ah}\int d^4z\{\tilde{\mathcal{L}}_1(z) + \tilde{\mathcal{L}}_2(x)\}]\cdot|G^{Rn})_{ah} \tag{4.8}$$

with

$$\tilde{\mathcal{L}}_1(z) \equiv \frac{M^2}{4}(ah)^{n+1}(h^2 x_{M,n+1} + y_{M,n+1})\{[\tilde{\sigma}^{Rn}(z)]^2 + [\tilde{\pi}_j^{Rn}(z)]^2\} \tag{4.9}$$

and

$$\tilde{\mathcal{L}}_2(z) \equiv \frac{-\lambda}{4}(ah)^{n+1} z_{\lambda n+1}\{[\tilde{\sigma}^{Rn}(z)]^2 + [\tilde{\pi}_j^{Rn}(z)]^2\}^2. \tag{4.10}$$

From (2.13)' and (2.14)', we can derive equations (2.13)" and (2.14)" for the new state $|G_t^{Rn})_{ah}$, which have the form obtained from (2.13) and (2.14) by replacing Z's and $|G^R)_{ah}$ with $Z_W(n)$, $Z_M(n+1)$, $Z_\lambda(n+1)$ and $|G_t^{Rn})_{ah}$, respectively. Then (2.13)" and (2.14)" give the same WI(2.18)' even for $|G_t^{Rn})_{ah}$. First, we consider the following WI:

$$ih(H|\delta_{ij}\tilde{\sigma}^{Rn}(x)\tilde{\sigma}^{Rn}(y) - \tilde{\pi}_i^{Rn}(x)\tilde{\pi}_j^{Rn}(y)|G_t^{Rn})_{ah}$$

$$= -m^2\sqrt{\frac{M^2+2m^2}{2\lambda}}\,(H|\tilde{\sigma}^{Rn}(x)\tilde{\pi}_j^{Rn}(y)\int d^4z\tilde{\pi}_i^{Rn}(z)|G_t^{Rn})_{ah}, \tag{4.11}$$

where we have used (2.18)' and (2.20). We compare DUV of order $a^{4+n}$ in both sides of (4.11), by noticing DUV in Fig. 2($b_2$) and Fig. 2(c) behave like $1/p^4$ at large $p^2$ (where p is the energy momentum of external lines), while those in Fig. 2($b_1$) behave like $1/p^2$, so that they should be cancelled. Thus we find

$$[\Sigma_\sigma(p)]_{DUV} = - z_{W,n+1}p^2 + \alpha_{n+1}(=0) \tag{4.12}$$

and

$$[\Sigma_\pi(p)]_{DUV} = - z_{W,n+1}p^2 + \beta_{n+1} \tag{4.13}$$

where $[\Sigma_\sigma]_{DUV}$ and $[\Sigma_\pi]_{DUV}$ are DUV in pseudo self energy parts of $\sigma$ and $\pi$, respectively.

Finally we consider

$$\begin{aligned} ih(H|&-\tilde{\pi}_i^{Rn}(x)\tilde{\sigma}^{Rn}(y)\tilde{\pi}_j^{Rn}(z) - \tilde{\sigma}^{Rn}(x)\tilde{\pi}_i^{Rn}(y)\tilde{\pi}_j^{Rn}(z) \\ &+ \delta_{ij}\tilde{\sigma}^{Rn}(x)\tilde{\sigma}^{Rn}(y)\tilde{\sigma}^{Rn}(z)|G_t^{Rn})_{ah} \\ &= - m^2\sqrt{\frac{M^2+2m^2}{2\lambda}}\,(H|\tilde{\sigma}^{Rn}(x)\tilde{\sigma}^{Rn}(y)\tilde{\pi}_j^{Rn}(z)\int d^4w\,\tilde{\pi}_i^{Rn}(w)|G_t^{Rn})_{ah}, \end{aligned} \tag{4.14}$$

which can be derived from (2.18)' and (2.20). Comparing DUV of order $a^{4+n}$ in both hand sides of (4.14), we find the relation which are shown symbolically in Fig. 3.

Figure 3

White blobs in Fig. 3 represent <u>only</u> DUV of order $a^{4+n}$. Especially, <u>proper</u> two point white blobs in Fig. 3 include effects due to Fig. 2($b_2$)



together with Fig. 2($b_1$) [i.e., (4.12) and (4.13)], so that they can be expressed by

$$\textcircled{\sigma} = - z_{W,n+1}p^2 + \gamma_{n+1}\ (=0) \tag{4.15}$$

and

$$\textcircled{\pi} = - z_{W,n+1}p^2 + \delta_{n+1}. \tag{4.16}$$

In (4.15) [and (4.12)], we have used the fact that $(H|\tilde{\sigma}^{Rn}|G_t^{Rn})_{ah}$ has been made to be finite up to order $a^{4+n}$ by (4.9) and (4.10). [Compare Fig. 2(a) with 2(b).] In the last step of Fig. 3, we have used WI (2.18) among tree (zero loop) amplitudes.

Since there does not exist any double pole on the left hand side of Fig. 3, a double pole term $\delta_{n+1}(k^2 + m^2 - i\varepsilon)^{-2}$ on the right hand side should not exist. Thus we conclude

$$\delta_{n+1} = 0, \tag{4.17}$$

so that (4.15) and (4.16) give

$$\textcircled{\sigma} = \textcircled{\pi} = - z_{W,n+1}p^2. \tag{4.18}$$

From (4.18) we find that the right hand side of Fig. 3 vanishes identically. In order for the left hand side of Fig. 3 to vanish, DUV must be proportional to zero loop's four point vertices. On the other hand, we have already eliminated DUV in $\sigma^4$ vertex by the counter term (4.6) [i.e., (4.10)]. Thus [together with similar analysis for $(H|\tilde{\pi}_i\tilde{\pi}_j\tilde{\pi}_k\tilde{Q}_{5\ell}|G_t^{Rn})_{ah}$], we can conclude that there is no DUV in 4 point

vertex $\sigma^2\pi^2(\pi^4)$. Thus we have proved that Green's functions given by generating functional $W^{R(n+1)}[J^{R(n+1)}]$ are finite up to order $a^{4+n}$, provided Z(n+1)'s are chosen as

$$Z_W(n+1) \equiv Z_W(n) + (ah)^{n+1} z_{W,n+1}$$

$$Z_M(n+1) \equiv Z_M(n) + (ah)^{n+1}(h^2 x_{M,n+1} + y_{M,n+1}) \qquad (4.19)$$

$$Z_\lambda(n+1) \equiv Z_\lambda(n) + (ah)^{n+1} z_{\lambda,n+1}.$$



## §5. ANALYTIC CONTINUATION IN "a"

In §4 we have obtained renormalized Green's functions in a power series expanison at a = h = 0. However, what we want to obtain is the renormalized Green's functions at a = h = 1 (see (2.1b)). Since "h" is a loop expansion parameter, "h" is accompanied with Planck's constant $\hbar$. Therefore, infinite sums induced by h = 1 are not specific to our treatment. On the other hand, infinite sums induced by a = 1 are specific to symmetric renormalization procedure. We consider this problem in this section.

The transition amplitude $(H|\tilde{\sigma}^R|G^R)_{ah}$ can be obtained in the form

$$(H|\tilde{\sigma}^R|G^R)_{ah} = \sum_{j=0}^{\infty} f_j(a)(ah)^j, \qquad (5.1)$$

where

$$f_j(a) = \sum_{i=1}^{\infty} a^i \alpha_{ij}. \qquad (5.2)$$

The infinite sum in (5.2) is a so called resummation problem by Lee.[9] Since we have used following Lagrangian

$$\mathcal{L} = -\frac{1}{2} Z_W \{ (\partial_\mu \sigma)^2 + (\partial_\mu \pi_j)^2 \}$$
$$+ \{-\frac{1}{2} m^2 + a^2 (\frac{M^2}{4} + \frac{m^2}{2})\}\{\sigma^2 + \pi_j^2\}$$
$$- \frac{\lambda}{4} Z_\lambda \{\sigma^2 + \pi_j^2\}^2 + m^2 \sqrt{\frac{M^2+2m^2}{2\lambda}}\, a\sigma \qquad (5.3)$$

with (4.2) in carrying out renormalization, we can find[9] that $f_0(a)$ in (5.2) is the value of $\sigma$, where the classial potential

$$V(\sigma) = \frac{1}{4}\lambda\sigma^4 + \{\frac{1}{2}m^2 - a^2(\frac{M^2}{4} + \frac{m^2}{2})\}\sigma^2$$

$$- m^2\sqrt{\frac{M^2+2m^2}{2\lambda}}\, a\sigma \qquad (5.4)$$

is stationary, i.e.,

$$V'(\sigma) = \lambda\sigma^3 + \{m^2 - a^2(\frac{M^2}{2} + m^2)\}\sigma - m^2\sqrt{\frac{M^2+2m^2}{2\lambda}}\; a=0 \; . \qquad (5.5)$$

In addition to $f_0(a)$, Eq. (5.5) has two other solutions, say, $g_0(a)$ and $h_0(a)$. It is easily found that $f_0(a) \geqslant 0$ for $0 \leqslant a \leqslant 1$, and

$$f_0(0) = 0,\; g_0(0) = i\sqrt{\frac{m^2}{\lambda}}\;,\; h_0(0) = -\, i\sqrt{\frac{m^2}{\lambda}}\;. \qquad (5.6)$$

In the range $0 \leqslant a \leqslant a_0$ $(<1)$, $g_0(a)$ and $h_0(a)$ are complex conjugate to each other, while $g_0(a) \leqslant h_0(a) < 0$ in the range $a_0 \leqslant a \leqslant 1$. On the other hand, we can show that a power series expansion (5.2) is absolutely convergent in the region $|a| < \varepsilon(\ll 1)$ in the complex "a" plane. Since the solution $f_0(a)$ of (5.5) has always definitely different value from $g_0(a)$ and $h_0(a)$ in the region $0 \leqslant a \leqslant 1$, we can analytically continue the expression (5.2) along the real axis:

$$\Sigma a^i \alpha_{i0} = \Sigma(a-a_0)^i \beta_{i0}$$

$$= \Sigma(a-a_1)^i \gamma_{i0} = \ldots = \Sigma(a-1)^i \delta_{i0}, \qquad (5.6)$$

$$(0 < a_0 < a_1 < \ldots < 1)$$

where $\delta_{00}$ is the solution of (5.5) at a = 1, so that



$$\delta_{00} = \sqrt{\frac{M^2+2m^2}{2\lambda}}\;. \qquad (5.7)$$

Equation (5.7) shows that we can obtain physical renormalized Green's functions in the spontaneously broken case, by analytically continuing renormalized Green's functions $(H|\tilde{\pi}^R(x)\ldots\tilde{\sigma}^R(y)|G^R)_{ah}$ along the real axis (in the complex "a" plane) to the point a = 1. It should be noticed that existence of mass term $\frac{1}{2}m^2\sigma^2$ <u>without</u> "a" parameter has played essential roles in this analytic continuation scheme.

Since all other infinite resummations in $f_i(a)$ $(i \geqslant 1)$ in (5.1) and in other renormalized Green's functions can be handled by factoring out $f_0(a)$, we conclude that physical renormalized Green's functions (at a = 1) can be <u>effectively</u> obtained by setting

$$f_0(1) = \sqrt{\frac{M^2+2m^2}{2\lambda}}\;. \qquad (5.8)$$

Incidentally, it is useful in understanding our renormalization scheme that resummation for Z's in (4.2) is always accompanied with "h", so that it is not typical of "a".

## §6. CONCLUSIONS

With the help of symmetric renormalization (proposed by Lee[9]), Ward identities and subtracting only dimensionally ultraviolet divergent terms[6,8] (like $(n-4)^{-1}$, $(n-4)^{-2}$, etc.), we have renormalized Lagrangian system (5.3) with small "a" i.e., in a power series in "a" (not in "h" as in Lee's paper[9]). Since there exist physical mass m ($m^2 > 0$) even at a = 0, we can calculate Feynman's integration over internal energies-momenta without encountering any unphysical divergences caused by tachyon like unphysical poles in propagators. This is not the case in Lee's formalism[9] for $M^2 > 0$ in (1.2), so that he assumed $M^2 < 0$, i.e., spontaneously broken case was not renormalized directly. Symmetric renormalization scheme is much easier than Symanzik's renormalization,[10] but it intrinsically has Lee's resummation problem[9] (5.2). We solved this problem by essentially using mass vertices $-\frac{1}{2} m^2\tilde{\sigma}^2$ in (5.3). This means that existence of explicitly symmetry breaking term is crucial in intermediate steps of anlytic continuation of "a" along the real axis of the complex plane. [Of course, it does not mean that we cannot set m = 0 at the final result.] Final conclusion of resummation problem is extremely simple in our case: We can obtain correct renormalized Green's functions at a = 1 by imposing the condition (5.8).



## ACKNOWLEDGMENT

I am grateful to G. F. Chew and M. Suzuki and other members of the theoretical group for their kind hospitality at LBL. I appreciate discussions with W. W. Wada at an early stage of this work. This work was supported by the Director, Office of Energy Research, Office of High Energy and Nuclear Physics, Division of High Energy Physics of the U.S. Department of Energy under Contract No. W-7405-ENG-48.

## REFERENCES


1. As excellent review articles on chiral dynamics, we recommend B. W. Lee, "Chiral Dynamics" (Gordon and Breach, New York, 1972); S. L. Adler and R. F. Dashen, "Current Algebras" (W. A. Benjamin New York, (1968).
2. S. Naito and S. Akahori, Phys. Rev. D18, 1230 (1978).
3. S. Mandelstam, Phys. Rev. 175, 1580 (1968).
4. S. Naito, Phys. Rev. D18 4650 (1978).
5. S. Naito, J. Math. Phys. 19, 568 (1978).
   S. Naito, J. Math. Phys. 20, 2319 (1979).
6. G. 't Hooft and M. Veltman, Nucl. Phys. B44, 189 (1972).
7. For renormalization, see W. Zimmermann, Commun. Math. Phys. 15, 208 (1969); J. H. Lowenstein and W. Zimmermann, Commun. Math. Phys. 44, 73 (1975), and various papers cited therein.
8. G. 't Hooft, Nucl. Phys. B61, 455 (1973).
9. B. W. Lee, Nucl. Phys. B9, 649 (1969).
10. K. Symanzik, Commun. Math. Phys. 16, 48 (1970).

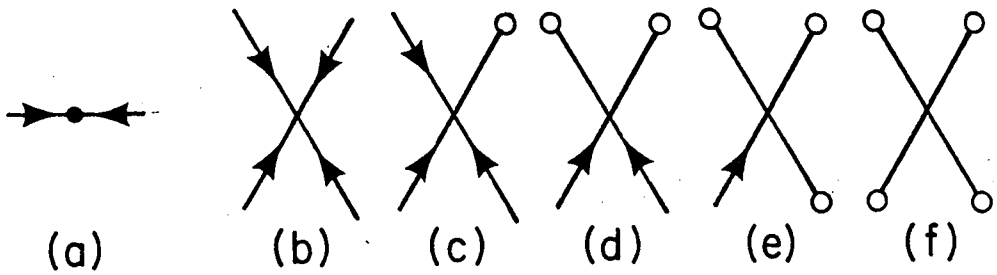


FIGURE 1

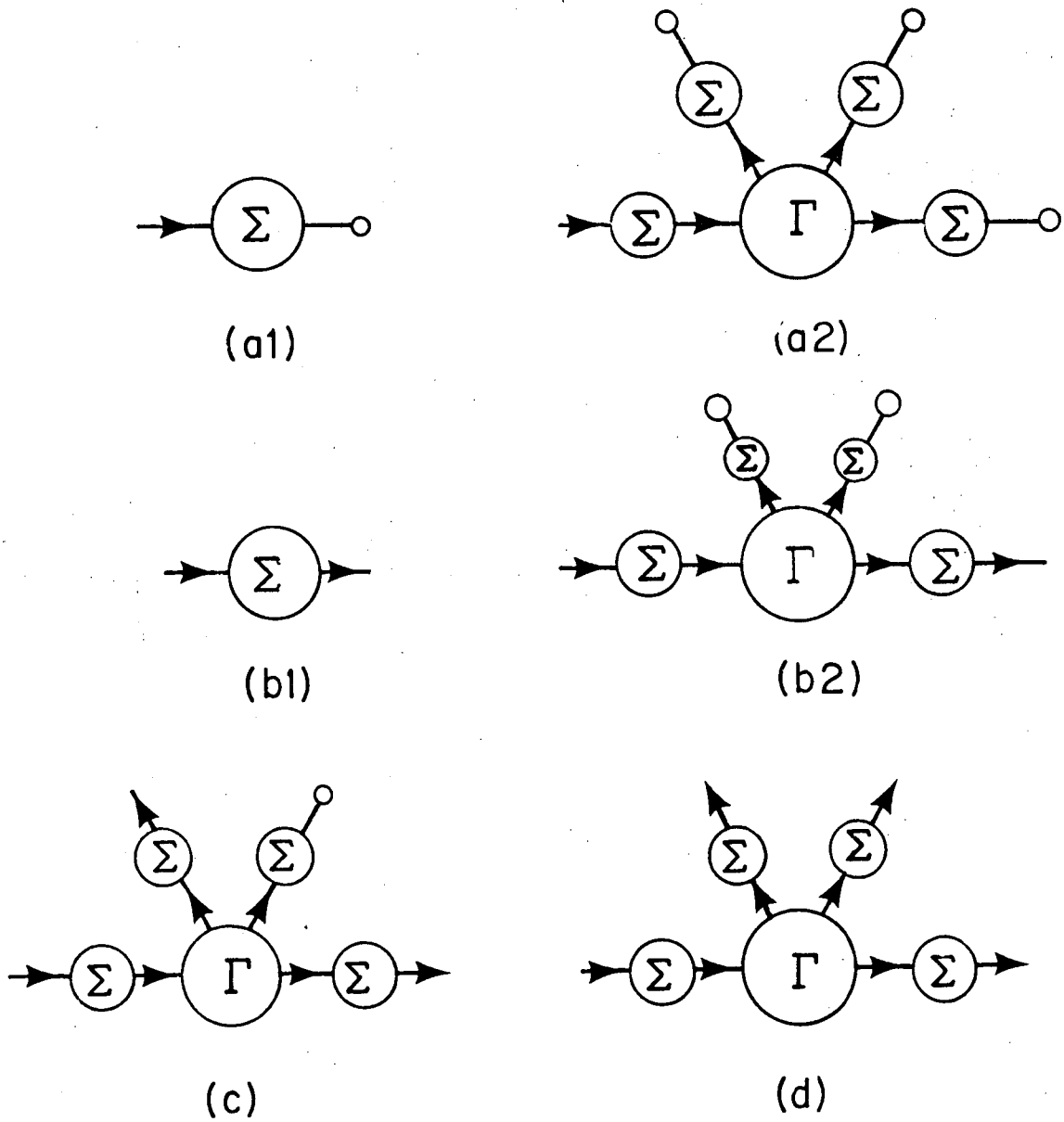


FIGURE 2

XBL 8110-1449

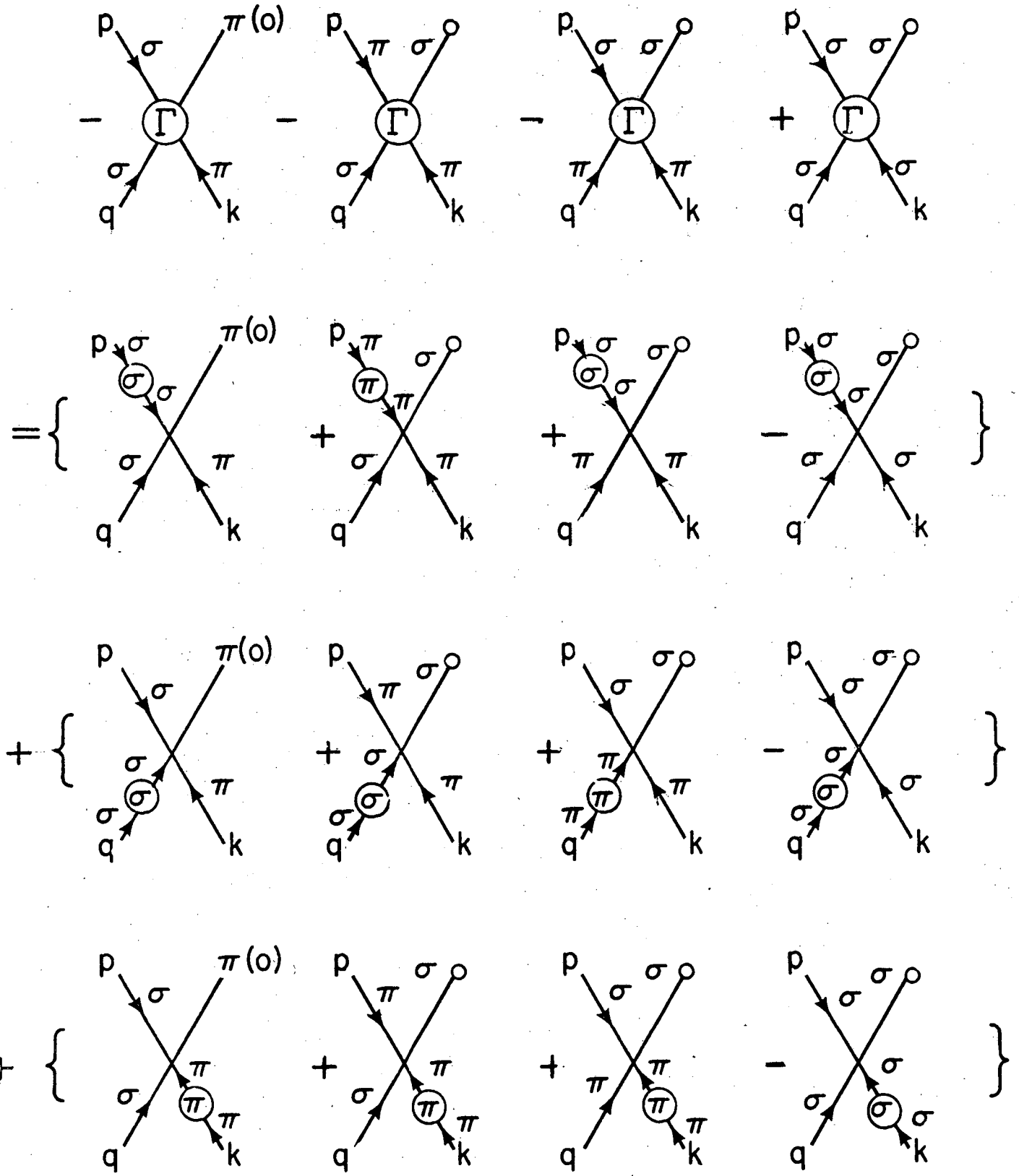


FIGURE 3

XBL 8110-1450

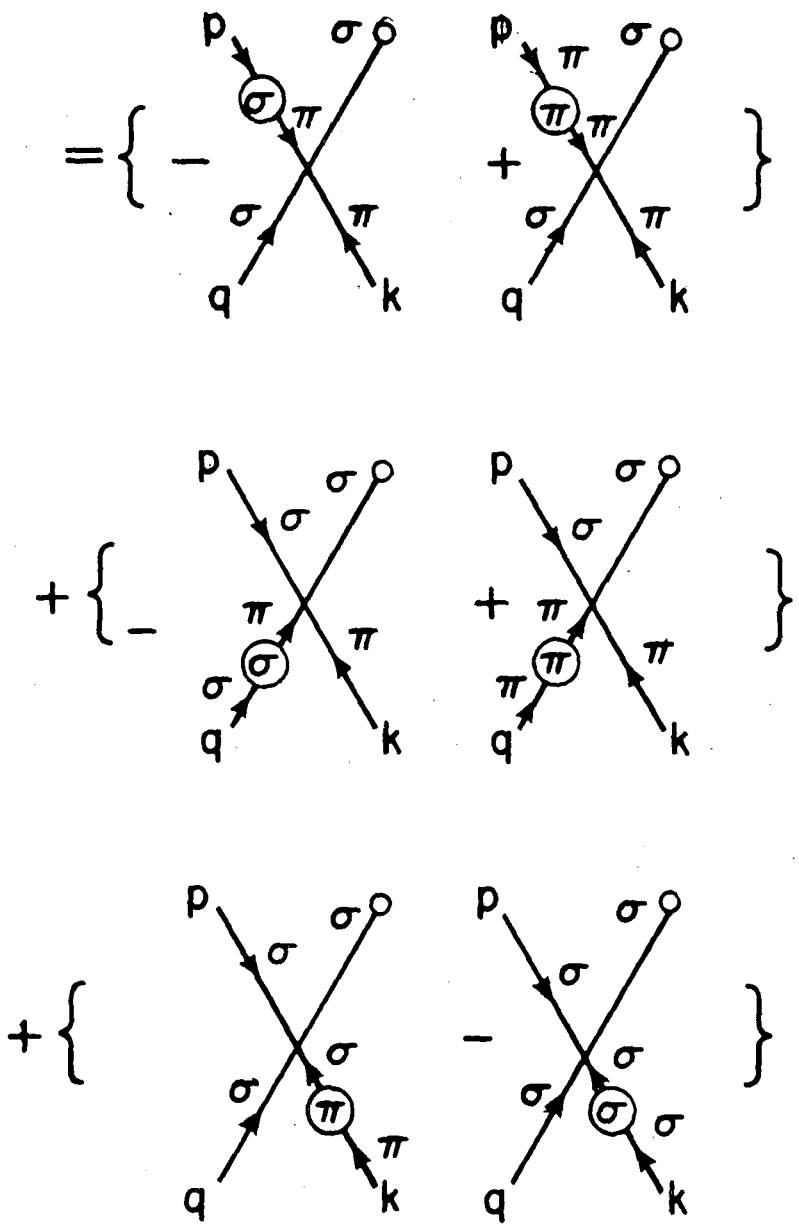


FIGURE 3 CONTINUED

XBL 8110-1451

This report was done with support from the Department of Energy. Any conclusions or opinions expressed in this report represent solely those of the author(s) and not necessarily those of The Regents of the University of California, the Lawrence Berkeley Laboratory or the Department of Energy.

Reference to a company or product name does not imply approval or recommendation of the product by the University of California or the U.S. Department of Energy to the exclusion of others that may be suitable.

*TECHNICAL INFORMATION DEPARTMENT*
*LAWRENCE BERKELEY LABORATORY*
*UNIVERSITY OF CALIFORNIA*
*BERKELEY, CALIFORNIA 94720*