LBL-13681
Preprint

Lawrence Berkeley Laboratory
UNIVERSITY OF CALIFORNIA

Submitted to Physical Review Letters

"MASS SCALING" PHENOMENA IN HEAVY FRAGMENTS PRODUCTION IN RELATIVISTIC HEAVY ION COLLISIONS

Fumiyo Uchiyama

December 1981

RECEIVED
LAWRENCE
BERKELEY LABORATORY
15 1982
LIBRARY AND
DOCUMENTS SECTION

NUCLEAR SCIENCE DIVISION

LBL-13681
c.2

Prepared for the U.S. Department of Energy under Contract W-7405-ENG-48

DISCLAIMER

This document was prepared as an account of work sponsored by the United States Government. While this document is believed to contain correct information, neither the United States Government nor any agency thereof, nor the Regents of the University of California, nor any of their employees, makes any warranty, express or implied, or assumes any legal responsibility for the accuracy, completeness, or usefulness of any information, apparatus, product, or process disclosed, or represents that its use would not infringe privately owned rights. Reference herein to any specific commercial product, process, or service by its trade name, trademark, manufacturer, or otherwise, does not necessarily constitute or imply its endorsement, recommendation, or favoring by the United States Government or any agency thereof, or the Regents of the University of California. The views and opinions of authors expressed herein do not necessarily state or reflect those of the United States Government or any agency thereof or the Regents of the University of California.

LBL-13681

"Mass scaling" phenomena in heavy fragments production in relativistic heavy ion collisions

Fumiyo Uchiyama†

Nuclear Science Division
Lawrence Berkeley Laboratory
University of California
Berkeley, CA 94720

Abstract

We point out the existence of "mass scaling" among different reaction channels in the inclusive nucleus production in high energy nucleus-nucleus collisions and discuss the reasons for its existence. The possible relationship between the inclusive cross sections and the existence-probability of clusters inside the nucleus is indicated.

This work was supported by the Director, Office of Energy Research, Division of Nuclear Physics of the Office of High Energy and Nuclear Physics of the U.S. Department of Energy under Contract W-7405-ENG-48.

†Permanent address: Institute of Applied Physics
University of Tsukuba
Sakura, Ibaraki 305, JAPAN

The scaling phenomenon in inclusive reactions in which a single particle in the final state is measured for hadron-hadron collisions ($A + B \rightarrow C +$ anything) has been known and studied for a long time[1]. The scaling is derived by assuming the existence of a momentum distribution function for the free and structureless constituents of the hadron in the high energy limit for the impulse type of interaction. The scaling variable that is used to describe the distribution depends on both the specific reactions and the kinematical regions of interest. One kind of scaling tested widely in hadron inclusive reactions is that the longitudinal momentum distribution of the observed hadron is independent of the beam momentum.

Since the nucleus consists of nucleons that play the role of constituents, a similar situation may occur for the inclusive nucleus-nucleus reaction in which a nuclear fragment in the final state is measured. Indeed, that was observed in the first high energy heavy ion reaction done by the Greiner-Heckman group[2] in 1974. They observed that both the inclusive cross sections and the momentum distributions of heavy nuclear fragments of charge Z neutron number N in the forward direction are independent of incoming heavy ion energies, 1.05 or 2 GeV/nucleon (of C^{12} and O^{12} beam). Considering the fact that the nucleons are <u>loosely</u> ($\sim$10 MeV/nucleon) bound inside of the nucleus and can be treated as structureless in the kinematical region of peripheral interactions, 1 and 2 GeV/nucleon beam momentum is high enough to satisfy the assumptions for the scalings mentioned above. Furthermore, since the observed secondary nucleus fragment is nothing but a bunch of constituent nucleons, there may exist a different type of scaling unique to the nucleus fragmentation.

In this paper, we point out that a new scaling we call "mass scaling" henceforth, which connects the different inclusive channels, does exist.

Speaking more precisely, the momentum distribution of the secondary nucleus C in the forward direction (we can conclude the same for the backward direction) can be described by a universal function of the scaling variable that is the <u>momentum</u> K where K is defined to be equal in the "beam rest" system to

$$K = \sqrt{\frac{m_C(m_B - m_C)}{m_B^2}}\ P_C$$

where m_C and P_C are the mass and the momentum of the observed fragment C respectively and m_B is the mass of the beam nucleus B. We proceed with the argument as follows: First, we briefly review the two-step kinematical model[3,4] to see where the mass scaling and the factor $\sqrt{m_C(m_B-m_C)/m_B^2}$ originate. Then we investigate whether the model of composite hadrons[5] can accommodate the mass scaling under some assumptions unique to nuclei in the kinematical region of our interest. If it does, the observation of heavy fragments in the peripheral regions of both projectile ions and the target may be related directly to the major cluster structure inside of the nucleus.

The inclusive reactions of nuclei producing heavy fragments (baryon number greater than two) in the peripheral region have been analyzed phenomenologically. In the kinematical model,[3] we assume that the beam fragmentation reaction $A + B \rightarrow C + X$, where C is observed in the forward direction, takes place by exchanging energy E upon collision and then decays into $C + X$; $A + B \rightarrow A^* + B^*$ then $B^* \rightarrow C + X$. The process of interest is illustrated in Fig. 1. It is found that the width of the momentum distribution of the secondary decay product C in the Gaussian distribution $\exp\left\{- P_C^2/\Gamma^2\right\}$ is given[6] by in B* rest system

$$\Gamma^2 = (\bar{E} - \delta_C - \sum_{i=1}^{n_C} \delta_i)\ \frac{2m_C(m_B-m_C)}{m_B} \qquad (1)$$

m_B and m_C are the masses of the nuclei B and C, respectively. δs are the binding energy of fragments and n_C is the number of fragments in X, that is, the number of the clusters that are treated as separate entities in unobserved X, and $\overline{E}$ is the average excitation energy. We introduce another quantity Γ_0 in order to explicitly factor the mass term containing m_C out.

$$\Gamma^2 = \Gamma_0{}^2 \frac{m_C(m_B-m_C)}{m_B{}^2} \tag{1'}$$

This result is derived[3] from energy and momentum conservation as follows: In B* rest system

$$m_B^* = m_B + E = (m_C^2 + \vec{P}_C^2)^{1/2} + (m_X^2 + \vec{P}_C^2)^{1/2}.$$

For $\quad |\vec{P}_C| \ll m_C, m_X,$

$$|\vec{P}_C^2| = \frac{2m_C m_X}{m_C+m_X}(m_B - m_C - m_X + E) \quad . \tag{2}$$

Defining a nucleon mass m in such a way that the projectile has no binding energy, namely $m_B = N_B m$, where N_B is the nucleon number in the nucleus B. and denoting the nucleon number in the observed fragment C by N_C, we have $m_C = N_C m + \delta_C$, where δ_C is the binding energy of the nucleus C. m_X fragments into n_C pieces of nuclei whose nucleon numbers and momentum are N_i and P_i respectively ($i = 1,2,\ldots,n_C$): $m_i = mN_i + \delta_i$. The energy-momentum conservation is

$$m_X = \sum_{i=1}^{n_C} m_i + \sum_{i=1}^{n_C} \vec{P}_i^2/2m_i - \vec{P}_C^2/2m_X \quad .$$

Since δ_is are less than 10 N_i MeV, and $\vec{P}_i^2/2m_i$ ($>\vec{P}_C^2/2m_X$) is of the order of a few MeV, whereas $mN_i > 940\ N_i$ MeV, we can safely make the following approximations:

$$m_C + m_X = m_B \tag{3}$$

$$(m_B - m_C) - m_X + E = (mN_B - mN_C + \delta_C) - \sum_{i=1}^{n_C} (mN_i + \delta_i)$$

$$- \sum_{i=1}^{n_C} (\vec{P}_i^2/2m_i) + \vec{P}_C^2/2m_X + E$$

$$= E - \delta_C - \sum_{i=1}^{n_C} \delta_i \quad .$$

Substituting these approximate forms into Eq. (2) and averaging over the excitation energy, we obtain eq. (1).

The assumption that the majority of unseen fragments in X have small momentum like the nucleus C is quite reasonable as we are interested in the region of the momentum fraction $x_D = \frac{m_C}{m_B}$ for fragment C. In other words, as the observed nucleus C is a bunch of nucleons having momentum/nucleon approximately the same as B, others are likely to be the same in majority. For a large enough nucleus B, the multiplicity n_C (the number of fragments produced from B) will be large and the binding energy term in $\Gamma_o = (\bar{E} - \delta_C - \sum_{i=1}^{n_C} \delta_i)$ tends to average out becoming δ_c independent and henceforth Γ_o becomes a constant. Thus the mass scaling result. This is indeed observed in the Ar^{40} fragmentation experiment[7] shown in Fig. 2. It is worth noticing here that the mass factor in eq. (1) $[m_C(m_B - m_C)/m_B]$ is nothing but the reduced mass of the two-body system of fragments C and X having the masses m_C and $m_X = m_B - m_C$, respectively. Note also that the nonrelativistic Schrödinger equation for a two-body system gives a bound state solution that has Gaussian form in momentum space with a width proportional to the product of the reduced mass and the binding energy in the small momentum region. This result will come out explicitly in the composite hadron model generalized for the case of nucleus below.

Generalizing the relativistic direct and hard collision models of composite hadrons, Schmidt and Blankenbecler[5] formulated a model for nuclei-nuclei interaction, which is applicable both to hadron productions as well as heavy nuclear fragments production. For its simplicity the model works quite well for pion and proton production[5,7]. We examine whether the model is applicable to the kinematical region of interest. In their analysis, the probability function for finding a constituent of type C in nucleus B. with a momentum fraction x_D and transverse momenta P_T, $G_{C/B}(x_D,P_T)$ is derived assuming various types of interactions among constituents. The probability function found most likely to be occurring in nature is the one assuming a nucleon-nucleon interaction mediated by the exchange of mesons with monopole form factors at each vertex. We omit the subscript D for x_D henceforth.

$$\overline{G}_{C/B}(x,k_T) = \frac{N\,(x)^2(1-x)^g\,x}{[P_T^2 + M^2(x)][M_1^2(x) + P_T^2]^g}$$

where $M^2(x) = (1-x)m_C^2 + m_X^2 - x(1-x)m_B^2$

$$M_1^2(x) = M^2(x) + \Delta^2$$

$$g = 6n_C - 1$$

N(x) is a slowly varying function of x. G has a minimum at $P_T = 0$ and $x = x_0$, where M^2 is a minimum. It is found

$$x_0 = \frac{m_B^2+m_C^2-m_X^2}{2m_B^2} \simeq \frac{m_C}{m_B}$$

The last expression for x_0 is obtained from energy-momentum conservation in the nonrelativistic limit for the peripheral interaction, namely eq. (3).

For momenta small with respect to the masses, and in the rest frame of the nucleus B, $x = \frac{m_C}{m_B} + \frac{P_C}{m_B}$ where P_C stands for the longitudinal momentum carried by fragment C. For small P_C, G becomes

$$G_{C/B}(P_C,P_T) = N^2(x_o)(1 - x_o)^g \, x_o \, e^{-\frac{P_C^2+P_T^2}{2}}$$

where

$$\Gamma^{-2} = \frac{2}{M^2(x_o)} + \frac{g}{M_1^2(x_o)} \tag{4}$$

For a nucleus with large nucleon number, the number of fragments n_C is large in general and accordingly g gets large, so the second term dominates the fall-off in the momentum P. In that case

$$\Gamma^2 = \frac{2}{g}\left[\delta_C \frac{m_C(m_B-m_C)}{m_B} + \Delta^2\right] \tag{5}$$

Considering the fact that Δ^2 should characterize the nucleus-nucleus interaction and the nucleus vertex, it may be parametrized as $\Delta^2 = 2d \frac{m_C m_X}{m_B} = 2d \frac{m_C(m_B-m_C)}{m_B}$ where d is a constant of the nucleus B. Eq. (5) then becomes

$$\Gamma^2 = \frac{2}{g}(\delta_C + d)\frac{m_C(m_B-m_C)}{m_B} \tag{6}$$

or

$$\Gamma_o^2 = \frac{2}{g}(\delta_C + d)m_B \tag{6'}$$

which is an analogous form to the one derived from the kinematical model, eq. (1). We get a similar expression for the case that the first factor (that is the very term that comes out from nonrelativistic Schrödinger equation mentioned before) in eq. (4) is not negligible:

$$\Gamma_o^{-2} = m_B \left[\frac{2}{\delta_C} + \frac{g}{2(\delta_C + d)} \right]$$

Comparing eq. (6) to eq. (1), we notice that they are identical in their dependence on fragment mass; however the ways the multiplicity comes in them are quite different. In the kinematical model, it comes in the form of binding energy $\sum_{i=1}^{n_C} \delta_i$ while the other in the factor g. Both have a quantity determined by the beam nucleus B, in one as the excitation energy E, in the other as d which parametrizes the nucleus B. The dependence on multiplicity is a future topic to be studied when the exclusive reaction experiment is completed[9]. However, it is worth pointing out again that the Ar^{40} fragmentation experiment[6] data (Fig. 2) show that Γ_o can be approximated by the constant for medium-sized fragments, 94 ± 5 MeV. This indicates two possible choices for d: (i) d is independent of g and the number of clusters n_C involved in the reaction may be a constant for all medium-sized fragments judging from eq. (6), or (ii) the quantity d may depend linearly on g, which implies that Γ_o is independent of n_C.

It has been known that not only the kinematical model and the composite model discussed above but other models[10] as well can derive the form of the fragment mass dependence $m_C(m_B-m_C)/m_B$ in eq. (1) for the width of the momentum distribution. This is not a strange coincidence. The following three conditions give this mass factor, and accordingly the mass scaling. (1) The kinematical conditions, energy-momentum conservation (that should hold in any theory, (2) the majority of fragmentation in heavy nuclei occur near the production threshold, (3) the energy required for fragmentation (binding energies) is small compared to the masses and the reaction involved is peripheral. In the limit of zero binding energies, the momentum distribution of various secondary C scales exactly as easily seen from the

fact that Γ_o is a constant of all the mass m_C. The appropriate mass scaling variable is the momentum in B rest system, $K = \frac{m_C(m_B-m_C)}{m_B^2} P_C$ and the longitudinal momentum distribution in terms of K is $\exp\{-K^2/\Gamma_o^2\}$ where Γ_o is a constant of the nucleus B but independent of the fragment masses as was observed in Ar^{40} experiment.

In conclusion, mass scaling is observed in inclusive heavy nuclei production from large nuclei in the peripheral interaction region and the mechanism causing this scaling is clarified.

Acknowledgments

The author would like to thank R. Blankenbecler for helpful conversation on the probability functions, D. Greiner for experimental data, and A. Smith for reading the manuscript. The work was completed under the hospitality of HISS Group at LBL. This work was supported by the Director, Office of Energy Research, Division of Nuclear Physics of the Office of High Energy and Nuclear Physics of the U.S. Department of Energy under Contract W-7405-ENG-48.

References

1. J. Benecke, T.T. Chan, C.N. Yang and E. Yen, Phys. Rev. 188, 2159 (1969)
R.P. Feynman, Phys. Rev. Lett. 23, 1415 (1969)
L. Foa, Supplement au Journal de Physique, Tom 34, Fasc. 11-12, p. C1-317 (1973)
See the text book by M. Close for references: "An Introduction to Quarks and Parton", Academic Press

2. D.E. Greiner, P.J. Lindstrom, H.H. Heckman, B. Cork, and F.S. Bieser, Phys. Rev. Lett. 35, 152 (1975)
P.J. Lindstrom, D.E. Greiner, H.H. Heckman, B. Cork, and F.S. Bieser, LBL Report No. LBL-3650 (1975) (unpublished)

3. F. Uchiyama, Phys. Rev. C23, 935 (1981)
N. Masuda and F. Uchiyama, Phys. Rev. C15, 972 (1977)

4. N. Masuda and F. Uchiyama, Phys. Rev. C15, 1598 (1977)

5. I.A. Schmidt and R. Blankenbecler, Phys. Rev. D15, 3321 (1977)

6. Y.P. Viyogi, T.J.M. Symons, P. Doll, D.E. Greiner, H.H. Heckman, D.L. Hendrie, P.J. Lindstrom, J. Mahoney, D.K. Scott, K. Van Bibber, G.D. Westfall, H. Wieman, H.J. Crawford, C. McParland, and C.K. Gelbke, Phys. Rev. Lett. 42, 33 (1979)

7. C.Y. Wong and R. Blankenbecler, Phys. Rev. C22, 2433 (1980)
R. Blankenbecler, SLAC-PUB-2077 (1978)

8. x_D is the momentum fraction of the particle C out of the parent nucleus B (of the beam) and is a longitudinally invariant quantity.

9. D. Greiner (private communication)

10. S.F. Goldhaber, Phys. Lett. 53B, 305 (1974)
J.V. Lepore and R.J. Riddle, Jr., 2nd High Energy Heavy Ion Summer Study, 283 (1974) LBL-3675

Figure Captions

Fig. 1. Schematical diagram for the B* formed from the beam nucleus B after acquiring energy E upon collision and decays into fragments.

Fig. 2. Values of Γ_0 for the fragments in the mass range 16 to 37 from A^{40} inclusive reaction taken from Ref. 6

Fig. 3. The basic direct interaction model diagram.

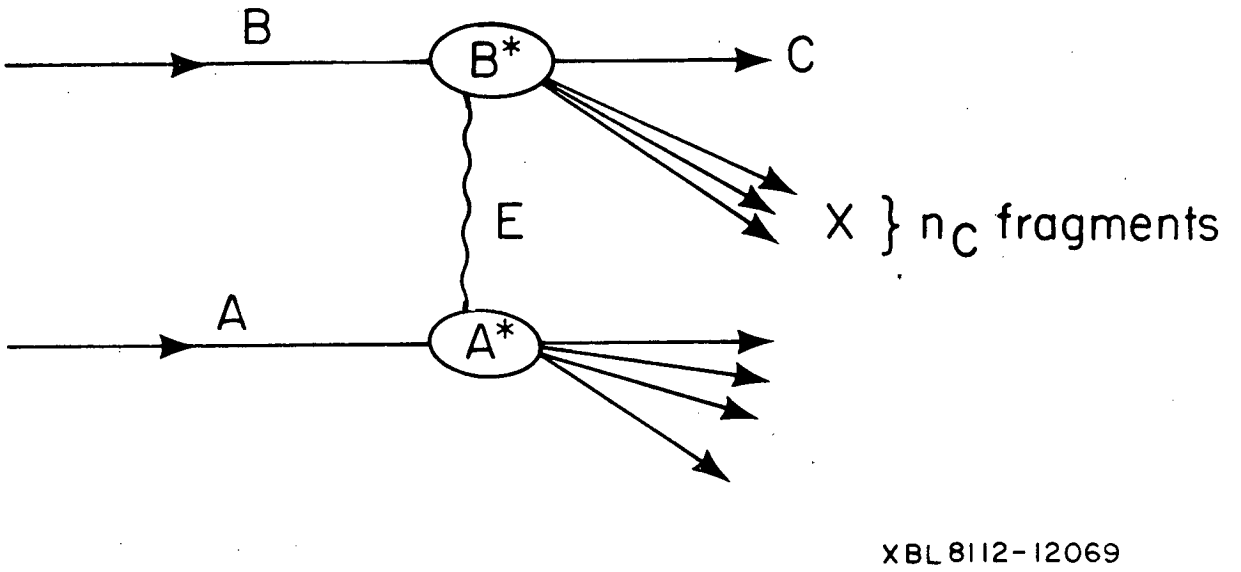

Fig. 1

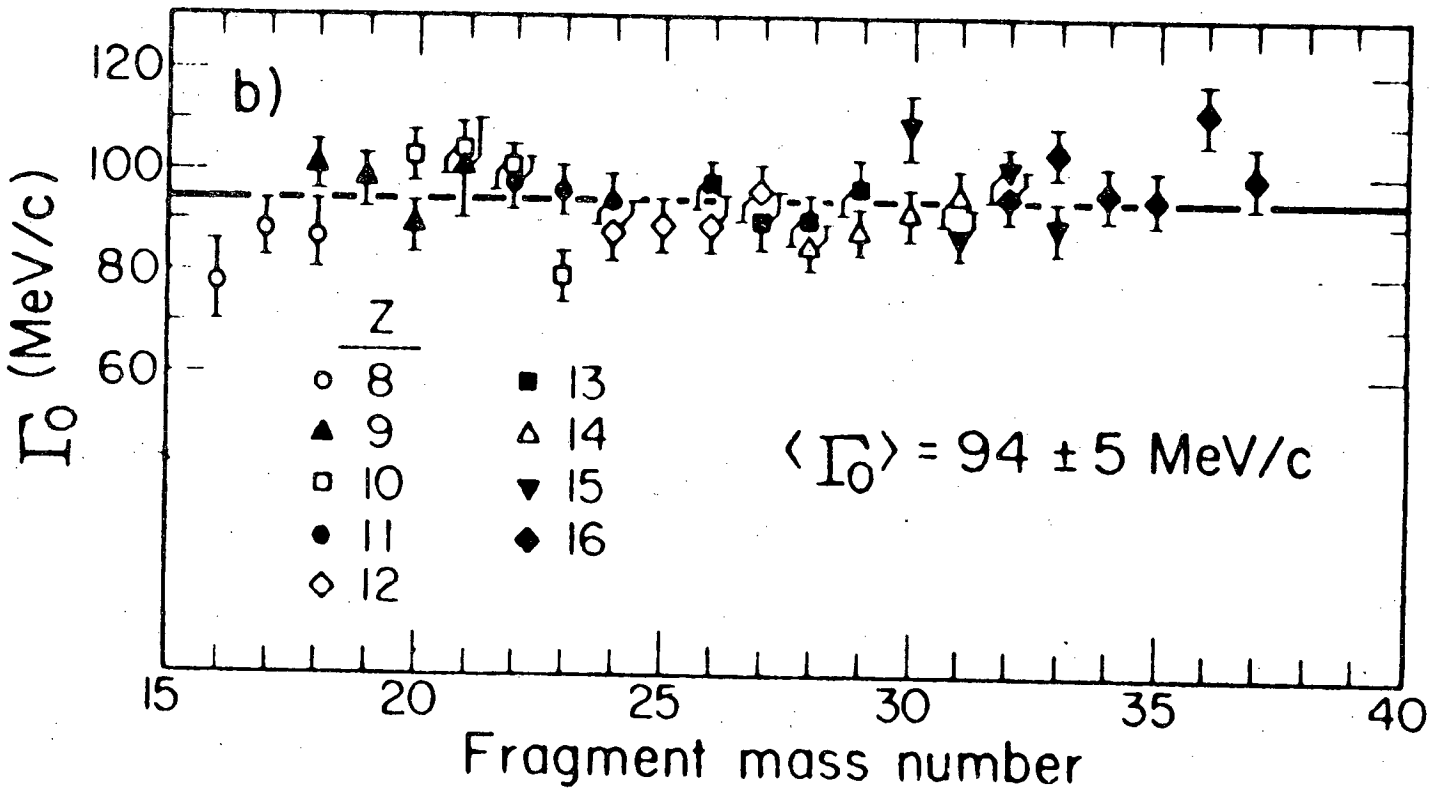

XBL 8112-12735

Fig. 2

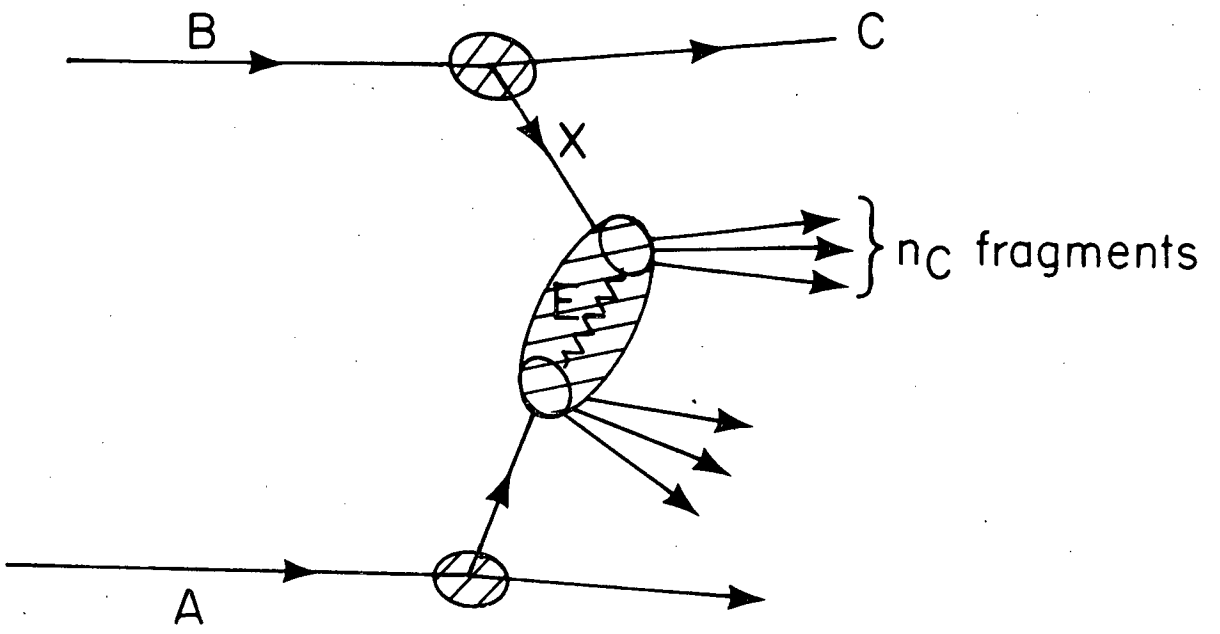

XBL 8112-12068

Fig. 3

This report was done with support from the Department of Energy. Any conclusions or opinions expressed in this report represent solely those of the author(s) and not necessarily those of The Regents of the University of California, the Lawrence Berkeley Laboratory or the Department of Energy.

Reference to a company or product name does not imply approval or recommendation of the product by the University of California or the U.S. Department of Energy to the exclusion of others that may be suitable.

TECHNICAL INFORMATION DEPARTMENT
LAWRENCE BERKELEY LABORATORY
UNIVERSITY OF CALIFORNIA
BERKELEY, CALIFORNIA 94720