LBL-13889
UC-95d

Lawrence Berkeley Laboratory
UNIVERSITY OF CALIFORNIA

ENERGY & ENVIRONMENT DIVISION

RECEIVED
LAWRENCE
BERKELEY LABORATORY

FEB 22 1982

LIBRARY AND
DOCUMENTS SECTION

HIGH-INTENSITY DISCHARGE 400W SODIUM BALLAST: PHASE II FINAL REPORT

Gerald Felper, Datapower, Inc.

October 1981

TWO-WEEK LOAN COPY

This is a Library Circulating Copy which may be borrowed for two weeks. For a personal retention copy, call Tech. Info. Division, Ext. 6782

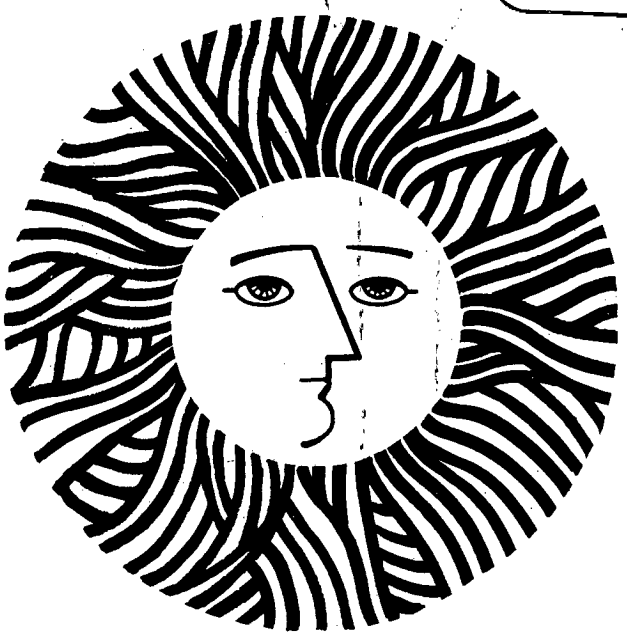

Prepared for the U.S. Department of Energy under Contract W-7405-ENG-48

LBL-13889 c.2

DISCLAIMER

This document was prepared as an account of work sponsored by the United States Government. While this document is believed to contain correct information, neither the United States Government nor any agency thereof, nor the Regents of the University of California, nor any of their employees, makes any warranty, express or implied, or assumes any legal responsibility for the accuracy, completeness, or usefulness of any information, apparatus, product, or process disclosed, or represents that its use would not infringe privately owned rights. Reference herein to any specific commercial product, process, or service by its trade name, trademark, manufacturer, or otherwise, does not necessarily constitute or imply its endorsement, recommendation, or favoring by the United States Government or any agency thereof, or the Regents of the University of California. The views and opinions of authors expressed herein do not necessarily state or reflect those of the United States Government or any agency thereof or the Regents of the University of California.

LBL-13889
EEB-L-82-01
L-58

HIGH-INTENSITY DISCHARGE 400W SODIUM BALLAST: PHASE II FINAL REPORT*

Lighting Systems Reseach
Lawrence Berkeley Laboratory
University of California
Berkeley, CA 94720

OCTOBER 1981

The work described in this report was supported by the Assistant Secretary for Conservation and Renewable Energy, Office of Building Energy Research & Development, Building Equipment Division of the U.S. Department of Energy under Contract No. W-7405-ENG-48.

*GERALD FELPER
Vice-President - Engineering
DATAPOWER, INC.
3328 West First Street
Santa Ana, CA 92703
Subcontract 4502210

ABSTRACT

The Department of Energy (DOE) through one of its operating contractors, Lawrence Berkeley Laboratory (LBL) of the University of California, has established projects to accelerate commercial use of electronic ballasts. LBL subcontracted to Datapower to undertake a research and development program directed toward design, test and evaluation of an energy efficient High Intensity Discharge (HID) Solid-State 400 Watt Ballast lighting system. Under Phase I of the project Datapower modified it's existing ballast to LBL configuration, measured performance characteristics, and compared efficiency with a core/coil ballast including energy loss analysis. Further, Datapower built six (6) prototype 400W High Pressure Sodium Ballasts for verification tests by an independent test facility prior to follow-on performance and life tests at LBL.

This report covers Phase II of the project which was designed to make test data comparisons on results received from the independent test laboratory, determine methods to increase ballast efficiency, determine the importance of power factors, conduct bulb life tests, perform specification review, performance versus cost analysis, investigate the ballast to determine compliance with new FCC requirement, and determine a line transient specification in respect to solid state ballasting. In addition, Phase II required reliability testing support to LBL, a manufacturing test plan, a marketing study for solid-state ballast and the manufacture and delivery of fifteen (15) demonstration ballast units to LBL.

TABLE OF CONTENTS

		PAGE
1.0	Program Objectives	1
2.0	Program Tasks and Contract	1
3.0	Task VII Program Plan	1
4.0	Task VIII Engineering Development	2
5.0	Task IX Reliability Test	18
6.0	Task X Manufacturing Plan	18
7.0	Task XI Demonstration Plan	21
8.0	Task XII Marketing Study	21
9.0	Task XIII Manufacture Demo Units	21
10.0	Summary	22

APPENDICES

A	Datapower Project Schedule	23
B	Market Study - 400 Watt High Intensity Discharge - Solid State Ballast	25

1.0 PROGRAM OBJECTIVES

Electronic Solid State Ballast that power fluorescent lamps at high frequencies have demonstrated energy savings and efficiency over magnetic core type ballast. The performance of improvements resulting from the use of solid-state ballasts in the fluorescent lamp should be obtainable if similar ballasting principles are applied to high intensity discharge (HID) lighting systems.

Phase I of this program was designed to produce a 400 watt solid-state, dimmable, ballast for driving a high pressure sodium lamp. In addition, the program was designed to accomplish testing to determine efficiency, dimming range, color rendering properties and reliability of this ballast. Program results are contained in the LBL Publication, LBL-11254, UC-95, EEB-L-80-05, HID 400-Watt Sodium Ballast, Phase I Final Report, dated June 1980. In Phase II, Datapower's major efforts were directed towards improving ballast design and maximizing performance to insure that the ballast meet commercial reliability standards.

2.0 PROGRAM TASKS AND CONTRACT

Program tasks and schedule are contained in Appendix A, Project Schedule.

Datapower was authorized under Amendment No. 3 to LBL Subcontract 4502210 to proceed with Phase II to the Scope of Work. Amendment No. 4 extended the subcontract to June 30, 1981.

3.0 TASK VII - PROGRAM PLAN

Task Statement: Prepare a detailed working plan for Phase II including the following:

A detailed project schedule.
DOE form 533, financial management report.
DOE form 535, manpower utilization report.
Technical and program management personnel.

The Task VII report was submitted to LBL at the beginning of Phase II of the contract. Appendix A of this report contains the detailed project schedule. DOE forms 535 and 533 have not been reproduced here. Datapower continued with the same technical and management team in Phase II as during Phase I. The program again headed by Gerald Felper - Project Manager, and John Brewer - Lead Engineer.

4.0 TASK VIII (A) - ENGINEERING DEVELOPMENT

4.0.1 Task Statement

Generate a report which will compare the test data received from the independent test laboratory, Lighting Research Laboratory (LRL), Orange, California and Datapower's test results. The report will determine variations found between the two with recommendations for changes in ballast test methods.

4.0.2 Test Data Comparison

We would like to commend the independent test laboratory for their very accurate and reliable testing of our 400W HPS ballast. With the exception of two of the parameters measured, LRL's data was almost in exact agreement with the data that was recorded at Datapower. The two parameters that we were in disagreement on were (1) the ballast input starting voltage, and (2) traversal of the ANSI - power vs. voltage - trapezoid.

The discrepancy in the ballast starting voltage probably resulted because of the fact that the ballast has an inherent 5-second delay from the time the input starting voltage (240VAC) is reached until the time the lamp strikes. Observation of the lamp striking while increasing the input voltage could very easily lead to the interpretation of higher input starting voltages. The best method to determine the input starting voltage of these ballasts is to monitor the output of the starting voltage comparator (Z 1, pin 2 to circuit ground) while slowly increasing the ballast input voltage. When the starting voltage is reached the comparator output goes from -8 volts to +8 volts. This enables a timing circuit and 5 seconds later the lamp will strike.

Traversal of the power-voltage trapezoid can only be measured after the ballast control circuit has stabilized at a particular power setting. Because of the long integration time in the Phase I ballast control circuit, this took approximately 10 minutes. The Phase II ballast control circuit was modified so that after an initial 10 minute warm-up period the ballast control circuit will stabilize to different intensity settings in less than 1 minute. During Phase I it was noted that the load characteristic of the sodium bulb looked almost totally resistive. In Phase II a bank of 120V incandescent bulbs was substituted in place of the sodium bulb to obtain load regulation data.

Output voltage and power were monitored as bulbs were added or removed from the output and traversal of the ANSI trapezoid was determined in this way. See Table 4-1 and Figure 4-1.

4.1 TASK VIII (B) - ENGINEERING DEVELOPMENT

4.1.1 Task Statement

Determine methods to increase ballast efficiency. The Datapower ballast design is to be re-analyzed on the basis of our power loss report to maximize the efficiency of the ballast. Also, the overall efficacy is to be analyzed for improvement.

4.1.2 Ballast Efficiency

The efficiency of the six Phase I ballasts was less than anticipated. Last minute design changes of the input choke and output transformer resulted in much lower efficiencies in these ballasts. Subsequent re-evaluation and re-design of our ballast circuit has improved the efficiency of the ballast significantly.

The changes were made as follows:

(1) Output transformer - The turn ratio was changed from 60:23 to 60:21. This lowered the peak currents and increased the duty cycle seen by the output transistors while still meeting end of life* output requirements.

(2) Transistor Drive Circuit - The transistor drive transformer and associated circuitry were changed resulting in faster switching times and lower saturation voltages for the output transistors.

(3) Snubber - Because of the faster transistor switching times brought about by the previous design changes, it became possible to cut the power dissipated in the snubber by almost half.

For resulting ballast efficiencies, see Table 4-2 and Figure 4-2.

Further, the efficacy due to the ballast output waveform was also examined. A test was run to determine the effect of duty cycle on bulb efficacy (see Figure 4-3 and Table 4-3). It was observed that the efficacy was influenced by a change in duty cycle although not by any significant amount. Changes made in the Phase II ballast resulted in slightly better output duty cycle.

* 140 volts at nominal input voltage.

TABLE 4-1

Output Power Versus Voltage at Different Intensity Settings

Vout (volts)	Pout (watts)	Vout (volts)	Pout (watts)	Vout (volts)	Pout (watts)	Vout (volts)	Pout (watts)
84	410	75	354	67	306	57	254
94	409	85	354	75	306	64	252
108	408	97	352	86	305	74	252
118	405	112	350	101	303	88	251
125	403	118	348	114	300	104	247
130	402	127	347	122	298	113	245
139	398	134	344	131	293	123	242
		137	342	139	288	132	239

Vout (volts)	Pout (watts)	Vout (volts)	Pout (watts)	Vout (volts)	Pout (watts)
47	205	33	153	20	105
53	204	41	155	26	107
63	202	49	152	34	109
75	200	57	150	42	107
82	199	63	150	54	105
93	197	73	148	62	103
103	195	89	145	77	102
110	194	99	144	87	100
119	192	109	143	104	98
131	186	112	141	124	94
		125	138		

GRAPH OF BALLAST OUTPUT POWER VS OUTPUT VOLTAGE

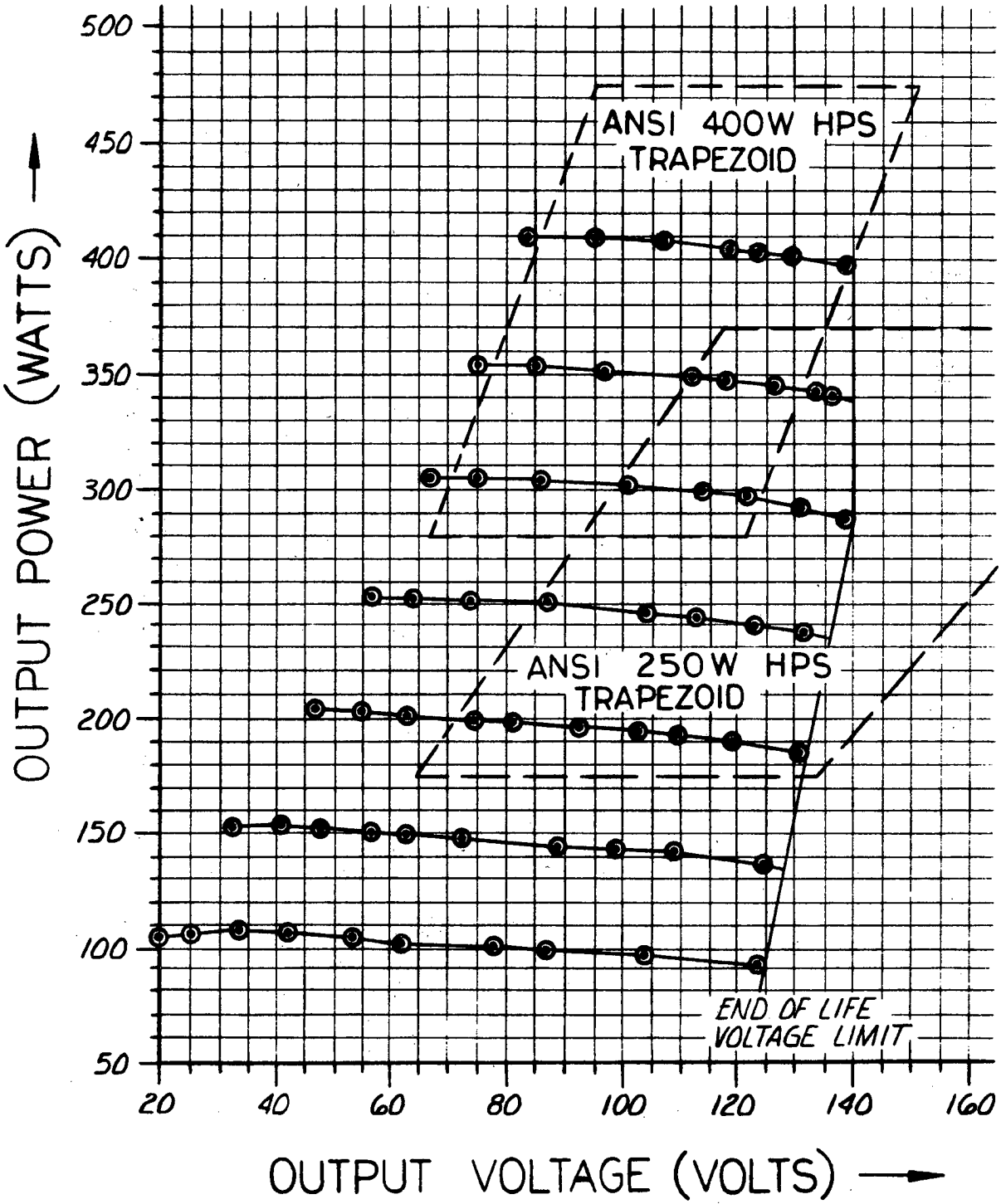

FIGURE 4-1

TABLE 4-2

Solid-State Ballast Efficiencies

Vin	Pin	Pout	Pout/Pin	Iphotocell
249	114	95		.056
277	121	101	83.3	.059
305	125	104		.062
249	170	146		.137
277	176	150	84.8	.140
305	180	150		.140
249	229	197		.232
277	233	200	85.5	.234
305	234	198		.228
249	286	247		.317
277	290	250	86.0	.325
305	288	246		.322
249	342	297		.402
277	346	300	86.6	.406
305	342	295		.398
249	396	346		.478
277	400	350	87.2	.482
305	396	344		.474
249	449	395		.552
277	455	400	87.8	.557
305	451	395		.550

Core-Coil Ballast Efficiencies

Vin	Pin	Pout	Pout/Pin	Iphotocell
108	376	325	86.4	.427
115	405	350	86.4	.460
122	436	375	86.0	.488
130	465	400	86.0	.516

GRAPH OF EFFICIENCY VS OUTPUT POWER

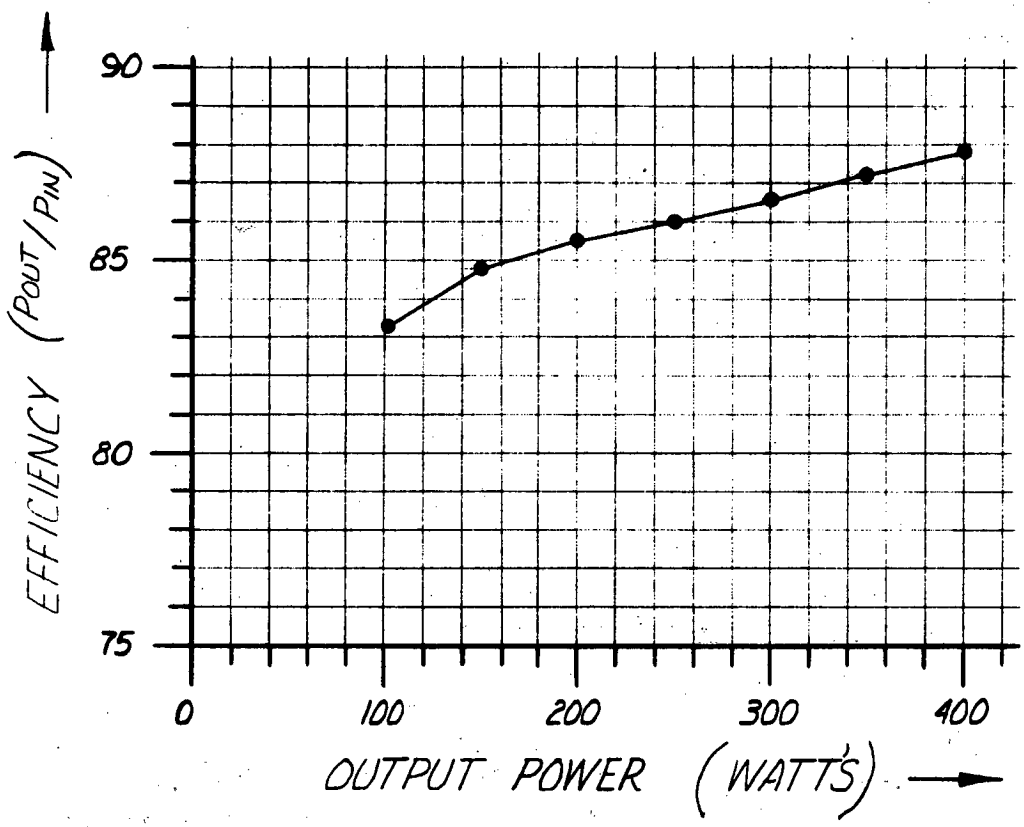

FIGURE 4-2

FIGURE 4-3

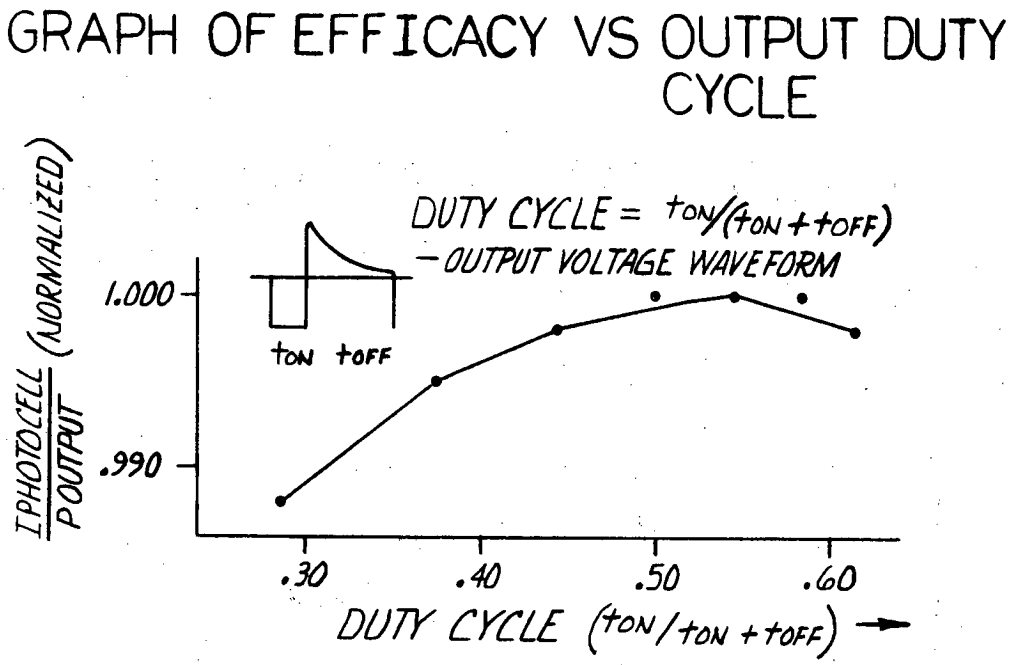

TABLE 4-3

Table of Efficacy Vs. Output Duty Cycle

Ton (μsec)	Ton/Ton +Toff (Toff = 25μsec)	Poutput @ Iphotocell = Const. (Watts)	Iphotocell / Poutput (normalized)
10	.286	405	.988
15	.375	402	.995
20	.444	401	.998
25	.500	400	1.000
30	.545	400	1.000
35	.583	400	1.000
40	.615	401	.998

4.2 TASK VIII (C) - ENGINEERING DEVELOPMENT

4.2.1 Task Statement

Regulatory agencies will be contacted to determine the importance of high power factors ballasts with regard to overall system efficiency.

4.2.2 Ballast Power Factors

Further investigation was made into increasing the power factor of our 400W ballast. It was observed the power factor could be increased by increasing the DC choke inductance to broaden the input current waveform and adding a capacitor in series with the power line to give the appropriate phase shift. Figure 4-4 and Table 4-4 show ballast input waveforms and resulting ballast power factor.

It was also observed that the voltage across the DC capacitor (120mf) changes less from 100W to 400W output for the high power factor unit than it did for the lower power factor unit. This resulted in better line regulation for the high power factor unit. It also created the possibility of even further increasing the output transformer turns ratio while still maintaining end of life requirements. This latter change would further increase the efficiency and efficacy of the ballast.

Many customers do not need high power factor and it must be optional. There is no regulatory agency requirement for high power factor. Some local utilities do require high power factor equipment.

4.3 TASK VIII (D) - ENGINEERING DEVELOPMENT

4.3.1 Task Statement

Datapower will install two ballasts in Hubbell fixtures on the roof in their Santa Ana plant. These fixtures will operate approximately 12 hours on and 12 hours off cycles on a continuing basis. The ballast and lamp will be monitored on a weekly basis and also removed and checked for operation to within the ANSI specification on a periodic basis. This test will continue indefinitely.

4.3.2 Bulb Life Test

Datapower has four (4) 400W HPS fixtures mounted on the roof on the building. These lights are run from dusk to dawn 7 days a week for security purposes. At the beginning of October, 1981, two of the standard core/coil ballasts were replaced with two of Datapower's Solid-State 400W HPS ballasts. For the bulb life test, new bulbs with

FIGURE 4-4

Power Factor

Input Voltage & Current Waveforms

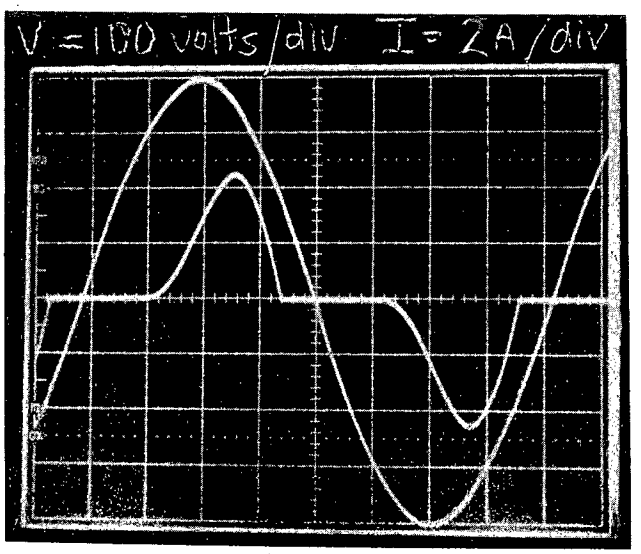

XPR 8110-10035

(1) With 40 mh DC Choke

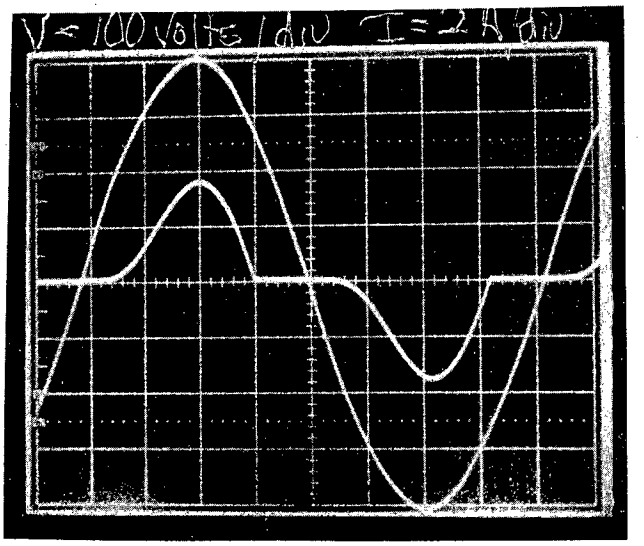

XPR 8110-10036

(2) With 120 mh Choke & Series Capacitor

TABLE 4-4

Ballast Power Factor for Different Choke and Capacitor Combination

DC Choke	AC Capacitor (in series with line)	Power Factor (100W)	Power Factor (400W)
(1) 40 mh	None	.72	.80
(2) 120 mh	27mf	.85	.95

closely matched operating voltages were installed in each of the four fixtures. The operating voltages and the date tested were recorded.

As part of Datapower's on-going bulb life test, end blackening and bulb operating voltage have been periodically measured and recorded to compare the aging effects of both the solid-state and core-coil ballasts. Future testing should include light output measurements to show comparative lumen depreciation. End blackening, lumen depreciation and increased arc tube voltage are all indicators of HPS bulb aging. During normal bulb operation, the arc tube ends become darkened by deposits of evaporated and sputtered electrode material. This process is known as "end blackening." At the same time sodium is being lost in chemical interaction with parts internal to the arc tube. The combination of both these processes is responsible for the lumen depreciation and increased operating voltage of the bulb which eventually leads to an end of its useful life.

Bulb life test results as follows:

End Blackening

Bulbs (1,2,4) all demonstrated nearly the same amount of end blackening. Bulb (3) which was operated by a solid-state ballast had significantly less end blackening than the other bulbs.

Increase in Bulb Voltage

Ballast Type	Core/Coil		Solid-State	
Bulb No.	1	2	3	4
Voltage (initial)	85.5V	82.1V	78.7V	81.6V
(7 months)	88.7V	86.8V	89.8V	86.5V
Change in Voltage	3.2V	4.7V	11.1V	4.9V

Bulbs (1,2,4) again demonstrated nearly the same increase in operating voltage. Bulb (3) showed a very large increase in operating voltage.

The validity of data from bulb (3) is questionable as explained below.* From preliminary data on the other (3) bulbs it may be concluded that the solid-state ballast caused nearly the same bulb aging as the core/coil ballast. Possibly a little more. Further testing with a larger population should be done before an appropriate evaluation as to the effects of our solid-state ballast on bulb life can be made.

* The large increase in operating voltage of bulb (3) might very easily be attributed to its operating environment. Early

in the test, vandals shattered the fixture's safety glass face plate and the fixture was left to operate in this state for several months. Much of the light generated by bulb (3) was reflected back into the fixture by the many surfaces of the shattered safety glass. Absorption of radiation returned to the arc tube does cause higher arc tube temperatures and pressures and could easily be responsible for the accelerated aging of the bulb.

4.4 TASK VIII (E) - ENGINEERING DEVELOPMENT

4.4.1 Task Statement

Analysis will be undertaken to determine the overall specifications and performance versus cost needed to compete in the commercial marketplace. This analysis will be complemented by the testing now being done by Hubbell Lighting.

4.4.2 Specification Review Performance Versus Cost

Three performance features were analyzed, since customer feedback showed that options were needed in those areas.

(A) Dimming - Dimming seems to have mixed importance to various people. It is obvious that dimming has advantages in energy savings, but the market is non-existant at this time. The cost of manual dimming is very low since Datapower's present design requires a potentiometer for setting the MAX lamp power. Photoelectric and remote dimming are also of interest to our customer at a $5.00 premium.

(B) Constant Power - Constant power is costly, but is the most important attribute that the solid state ballast has. With constant power, it can be shown that 25% can be saved in lumen maintenance. Also constant power guarantees constant color with color corrected lamps. The OEM cost for constant power is 10% of the ballast cost.

(C) Power Factor - High power factor cost $8.00 OEM and is important in some applications.

4.5 TASK VIII (F) - ENGINEERING DEVELOPMENT

4.5.1 Task Statement

Conducted and Radiated Interference by FCC Specifications. The ballast to be investigated to determine its compliance with the newly established FCC requirement. This will be accomplished by an independent test laboratory.

4.5.2 Findings

A solid state ballast was tested at Genesco Corporation's laboratory for conducted noise on the power line. The test showed that an auxiliary filter will be required to meet the FCC Chapter 15-A requirements. A proposed filter network was designed and tested for attenuation characteristics which would be required for compliance with the FCC specification. The proposed filter was also tested for VDE compliance in Europe. The filter network can be incorporated into the ballast case or used external to the ballast for optional compliance. A schematic of the filter is shown in Figure 4-5. The line to ground capacitors were chosen for a maximum of 3.5 ma leakage per the UL and VDE specifications. Radiated interference must be tested within a fixture. The lamp radiation should be tested with the appropriate lensing. Limited tests show that the ballast radiation is within the FCC specification with any metal fixture enclosure. The lamp radiation was not evaluated.

4.6 TASK VIII (G) - ENGINEERING DEVELOPMENT

4.6.1 Task Statement

Datapower with its experience in the power supply market will determine a line transient specification with regard to solid state ballasting. Datapower is to use, as a starting point, the National Code for impulse noise.

4.6.2 Line Transient Definition and Test

In our progress report of December 30, 1980, we stated that after reviewing a great deal of literature in the field and evaluation of various equipment requirements, Datapower is satisfied that the ANSI/IEEE C37.90-1978 specification for surge withstand capability (SWC) is the most appropriate specification to be used for all solid-state ballasts. The following is taken from the above referenced ANSI document.

Wave Shape - Damped oscillatory wave with a frequency range of 1.0 MHZ to 1.5 MHZ.

Voltage - 2.5 KV to 3.0 KV crest value of the first half cycle peak and envelope decaying to 50% of the crest value of the first peak in not less than 6 microseconds from the start of wave.

Source Impedance - The source impedance of the surge generator used to produce the test wave shall be 150 OHM ±5%.

FILTER NETWORK

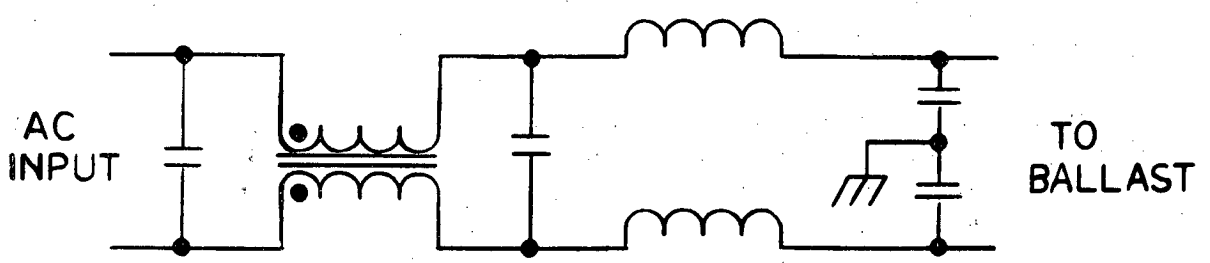

FIGURE 4-5

Application - The test wave is to be applied to the test ballast at a repetitive rate of not less than 50 tests per second for a period of not less than 2 seconds. The tests should be applied to the ballast input both common mode and differential mode, see Figure 4-6.

A typical SWC Generator is shown in Figure 4-7. It should be noted that commercial equipment is available to generate the specified surges. Velonex Model 360 with V-1885 plug-in is one source.

During both the common mode test and differential mode tests, the lamp shall not extinguish and the ballast shall not be damaged.

Transient Line Test - The surge generator described above was assembled and tested. The performance of the surge tester did deviate somewhat from the specifications previously given. The surge waveform had the same crest value and frequency as specified but decayed to 50% of the crest value in approximately one-half the specified time (3 microseconds instead of 6 microseconds). It was determined that this decay factor was due to the properties of the spark gap and was beyond our control to change at that time. The surge generator was connected as is to the Datapower ballast in both common mode and differential mode configurations. Both input and output voltage waveforms were observed on an oscilloscope. No change in ballast operation was observed during either the common mode or differential mode surge tests. Further, no damage resulted to either the ballast or the bulb.

Line Drop-Out Test - This test was performed to determine the comparative hold-up times of the Datapower ballast and the core/coil ballast. A tester was constructed to disconnect the test ballast from 60 Hz input power for a select number of cycles. It was found that the standard core/coil ballast could sustain the bulb arc with up to one-half cycle line drop-outs. It was also found that the Datapower ballast would sustain the bulb arc with one cycle drop-outs at full intensity and more than one cycle at lower intensities.

Results as follows:

Output Power (Watts)	Drop-Out (Number of 60 Hz Cycles)
400W	1.0
300W	1.5
200W	2.0
100W	2.5

LINE TRANSIENT TESTS

1. Common-Mode Test

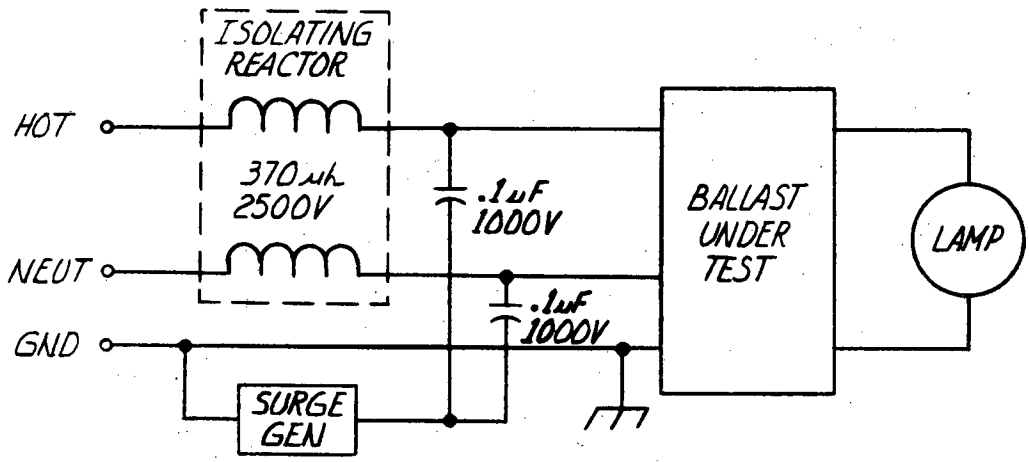

2. Differential-Mode Tests

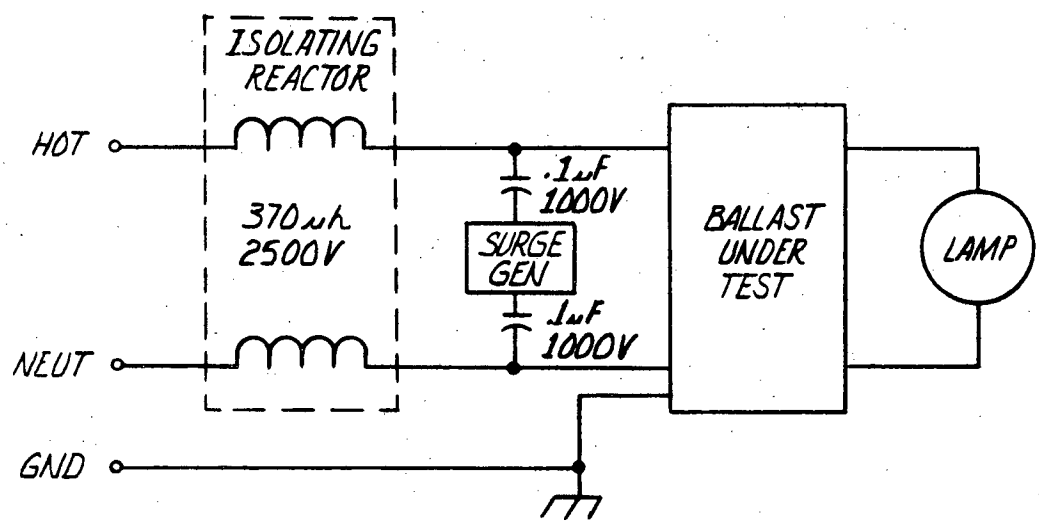

FIGURE 4-6

LINE TRANSIENT TEST

TYPICAL SWC GENERATOR

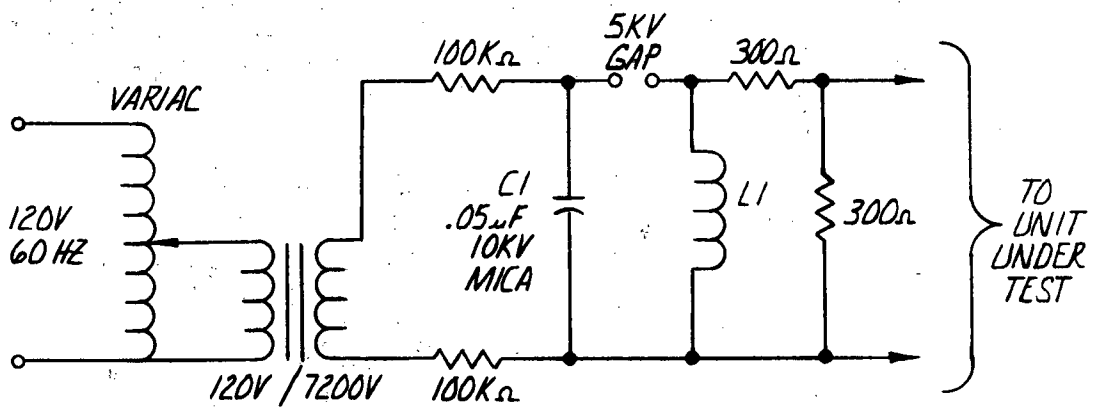

L1 = 3 TURNS 1/4" COPPER TUBING OR EQUIV
2 1/2" DIAMETER FORM

FIGURE 4-7

5.0 TASK IX - RELIABILITY TEST

5.0.1 Task Statement

Datapower will support LBL to the extent determined by LBL Project Management.

5.0.2 Reliability

A reliability analysis was undertaken to establish the mean time to failure of the solid-state ballast. Reliability is the most important objective of any solid-state ballast. Failures in the first 1000 hours (infant mortality) were investigated. The best approach to insure ballast reliability is to pre screen all semiconductors with multicycle thermal stress and 168-hour high temperature burn-in. This will reduce the infant mortality to less than 0.5% and an overall reliable operation of at least 8 to 10 years. At this time, Datapower has over 5000 hours of failure free operation documented.

NOTE: As of October 7, 1981, the two ballast on the roof of our facility have been in operation one year. 2 ballast x 365 days x 12 hrs/day = 8760 hours of ballast operation.

Our reliability tests will continue for many years in outdoor fixtures with all the environmental extremes normally encountered.

6.0 TASK X - MANUFACTURING PLAN

6.0.1 Task Statement

Datapower will submit a manufacturing plan for the 15 demonstration units. In response to the ballast packaging design, Datapower will analyze data to determine if any changes are required for LBL. Critical components will be identified and specification developed where required. A manufacturing flow chart and timetable will be included in the manufacturing plan.

6.0.2 Manufacturing Plan

Changes made to the ballast design are outlined in paragraph 4.1.2 of this report. The manufacturing flow and timetable is reflected in Manufacturing Plan Schedule Figures 6-1 and 6-2.

Director Manufacturing: I. Dickson
Project Engineer: John Brewer

PROJECT SCHEDULE

PROJECT LBL Task X - Manufacturing Plan 15 Demo Units — DATE Rev. 7/3/81
HID 400 Sodium Ballast — PREPARED BY B. Watson

ITEM NO.		DESCRIPTION Manufacturing Plan
1		Engineering: Release Long Lead Items
2		Engineering: Final Design Review
3		Release Bill of Materials
4		Procurement
	a	Long Lead Items
	b	Components
	c	PCB's
	d	FAB
	e	Transformers 1st Article
	f	Transformers Production
5		Manufacturing Engineering
	a	PCB, Harness & Drawing Aids
	b	Mechanical & Final Wire Aids
6		Material Control
	a	Receive-QC-Stock Parts
	b	Assemble Kit - 15 Units
	c	Release to Manufacturing
7		Manufacturing
	a	PCB's - Stuff/Solder Flow-QC
	b	Harness - Assemble - QC

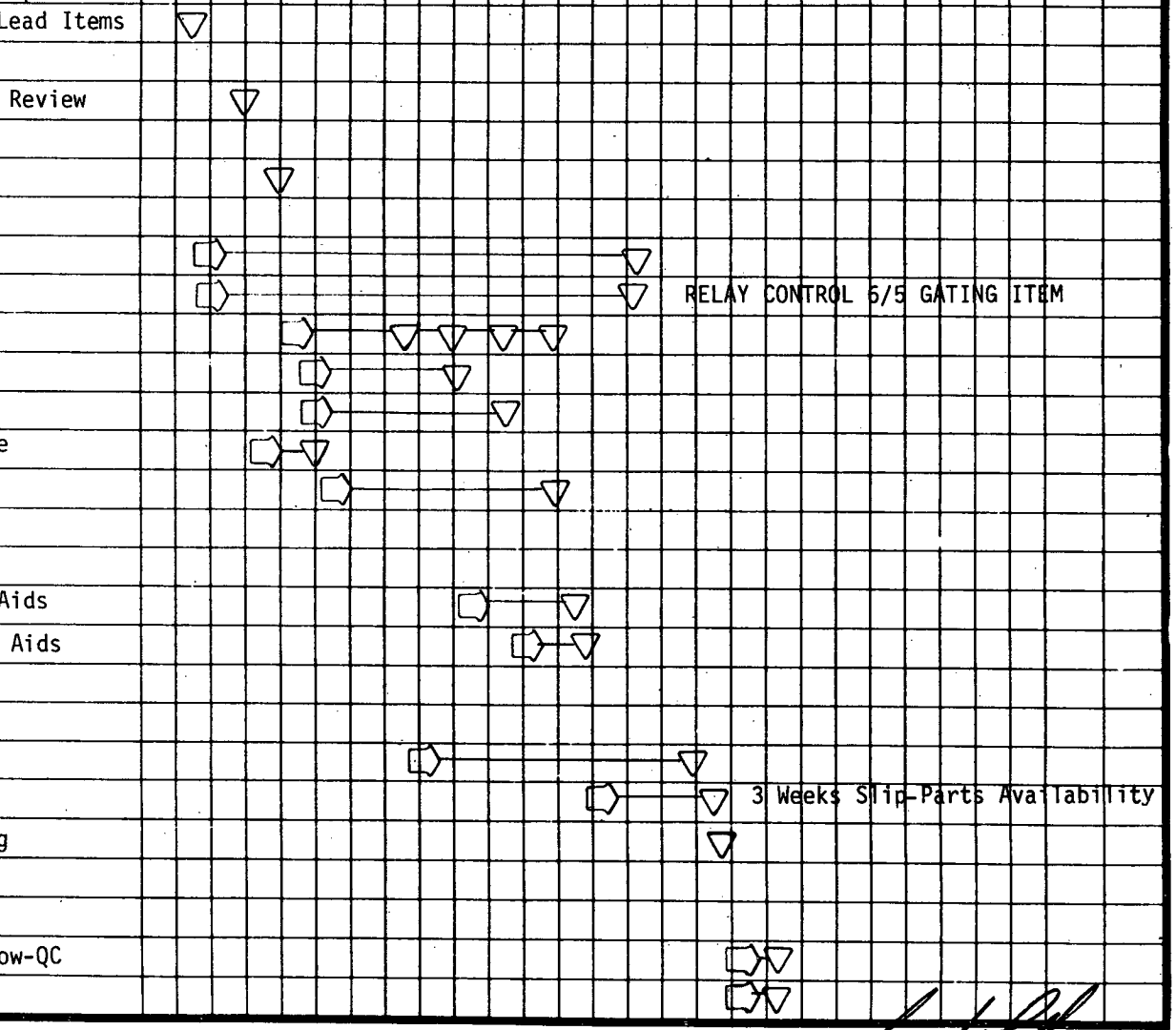

▷ - START ○ - MAJOR EVENT ◇ - CONFERENCE ▽ - COMPLETE * FRIDAY

APPROVED BY

F170

FIGURE 6-1

Director Manufacturing: I. Dickson
Project Engineer: John Brewer

PROJECT: LBL Task X - Manufacturing Plan 15 Demo Units — DATE: Rev. 7/3/81
HID 400 Sodium Ballast — PREPARED BY: B. Watson

PROJECT SCHEDULE

ITEM NO.		DESCRIPTION	MONTH/YEAR	MARCH				APRIL				MAY				JUNE				JULY				AUG.			
			WEEK ENDING*	6	13	20	27	3	10	17	24	1	8	15	22	29	5	12	19	26	3	10	17	24	31	7	14	21	28
			WEEK NUMBER	1	2	3	4	5	6	7	8	9	10	11	12	13	14	15	16	17	18	19	20	21	22	23	24	25	26
7		Manufacturing (Con't)																											
	c	Mechanical Assembly																											
	d	Final Wire & In Process Inspection																											
8		Ballast Test & Evaluation																											
9		Final Inspection																											
10		Ship Units 1 Thru 5																											8/27
		Ship Units 6 thru 10																											8/31
		Ship Units 11 thru 15																											9/3

- START - MAJOR EVENT - CONFERENCE - COMPLETE * FRIDAY

APPROVED BY

F170

FIGURE 6-2

7.0 TASK XI - DEMONSTRATION PLAN

7.0.1 Task Statement

Datapower will support LBL in establishing a demonstration test bed of the system ballast.

7.0.2 Datapower was advised by LBL that Westinghouse may be running field demonstrations at their plant in New Jersey under direction of LBL.

8.0 TASK XII - MARKETING STUDY

8.0.1 Task Statement

A consulting company will be selected to generate a marketing study for solid-state ballasts.

8.0.2 A marketing consultant, Mr. William O. Fordiani, was selected for this task. An Electronic Ballast Marketing Study outline was prepared for and approved by LBL. Mr. Fordiani's final report is contained in Appendix B.

9.0 TASK XIII - DEMONSTRATION BALLASTS

9.0.1 Task Statement

Datapower will build and deliver fifteen (15) demonstration ballast units to LBL.

9.0.2 The Manufacturing Plan (Task X) contains the detailed build and ship schedule of the ballast. Datapower shipped to LBL five (5) units each on 8/27/81, 8/31/81, and 9/3/81.

10.0 SUMMARY

Many important factors were investigated and many new attributes of solid-state ballasting of HID lamps were learned.

Life testing showed little differences between solid-state ballasts and core and coil ballasts as far as lamp life is concerned.

The importance of low flicker associated with our solid-state ballast can allow HPS lamps to be used where strobistopic effect make the core and coil inoperable. The fact that the solid state ballast output is present after input power is removed, allows the lamp to remain lit during short power outages. By adding more capacitance or a DC battery, the storage time can be increased from 1 cycle, to many seconds. This can reduce or eliminate the need for instant restrike in harsh environments.

As in most solid-state ballasts the pricing versus core and coil ballasts leaves the core and coil with some advantage, but at 100,000 quantity the pricing is the same for the 400 watt ballast. With the discussed inherent advantage the solid state ballast seems marketable at quantities of 10,000 pieces.

As the quantity increases all solid-state ballasts will be less expense than core and coil counter parts.

APPENDIX "A"

DATAPOWER PROJECT SCHEDULE

DATAPOWER INC.

PROJECT SCHEDULE

PROJECT LBL - HID 400W SODIUM BALLAST - PHASE II

DATE 5/20/81

APPENDIX A TO PHASE II PLAN PREPARED BY B. WATSON

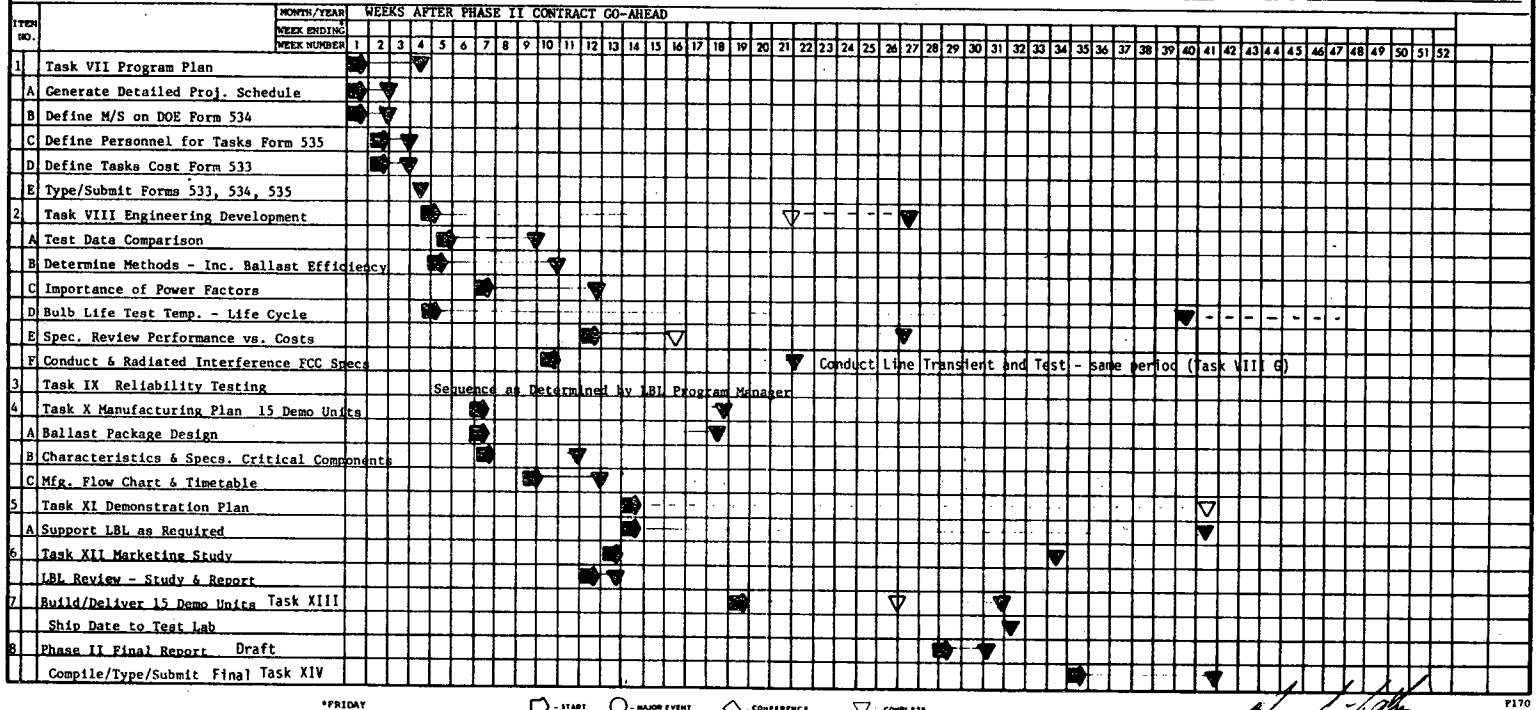

APPROVED BY

GERALD FELPER/PROJECT MANAGER

F170

NOTE: Item No. 2C - Continuing ; Item No. 5 LBL Directed; Item No. 7 - See Task X for Schedule

APPENDIX "B"

400 WATT

HIGH INTENSITY DISCHARGE

SOLID-STATE BALLAST

MARKET STUDY

SCOPE

Estimates of the market size for electronic solid state ballasts of all types range from several hundred million to one billion dollars by the year 1990. This study was limited to the determination of market potential for the specific device of a 400 watt high intensity discharge solid state ballast for high pressure sodium lamps.

METHODOLOGY

Because of the embryonic nature of the electronic ballast marketplace, a major emphasis was placed on a "grass roots" approach to data gathering. Personal interviews and telephone interviews were conducted as the primary method in obtaining opinions and estimates about the new technology.

SUMMARY

There, in fact, exists a market potential for a solid state ballast rated 400 watts to drive high pressure sodium lamps. Without knowing the exact shipments by ballast manufacturers, the current market for 400 watt core and coil ballasts can only be derived from estimates of consumption by major lighting original equipment manufacturers (OEM). The general consensus is that there are somewhere between 500,000 and 1 million units per year being sold. Because of consumer's initial cost consciousness and their basic "proceed with caution" mental attitude concerning new technology, it is almost impossible to determine a current market size and growth rate for electronic ballasts. To build a judgement data base, the assumption must be made that the electronic ballast in its basic form without option will sell for a price equivalent

to the equivalent core and coil ballast. Further, the assumption must be made that the consumers many concerns about the device and its technology will be satisfied through demonstrable proof that a reliable cost effective device does indeed now exist and will survive the rigors of its installation environment.

COST

It is generally assumed that since the prices for copper, steel and petro-based potting compounds will all continue to increase, a corresponding price increase should be seen in the prices for core and coil ballasts which are a material intensive product. Except for small quantity pricing which has increased with regular manufacturers price increases, large quantity OEM pricing of core and coil ballasts has remained relatively constant with minimal increases, if any. The range of retail to OEM pricing for a standard core and coil 400 watt High Pressure Sodium Ballast is currently $150.00 for retail level quantity one (1) down to $35.00 for OEM quantities of 100,000 on an annual contract basis. It can be assumed that if a major manufacturer of core and coil ballasts is faced with a significant loss of market share from its electronic variety, the first reaction will be to lower prices. The price leadership strategy would serve to further delay any major inroads to market share by the electronic equivalents.

Most users are still very concerned about initial pricing, although this will continually diminish as the concept of life cycle costing becomes more widespread. Over the past few years, the trade literature has been replete with "how to" articles on simple

pay back, accelerated simple pay back, Return on Investment (ROI) and life cycle cost techniques in an attempt to assist the user in evaluating and justifying higher prices for energy-saving products. Even as this methodology becomes more commonplace and the resultant "you have to spend more to save more" attitude becomes more prevalent, there will always be a reluctance to pay higher initial prices.

Costs of electronic ballasts are a major problem in what is seen as the largest potential market segment for the 400 watt HID solid state devices. The largest potential segment is the manufacturers of lighting fixtures. Typically these manufacturers have minimal vertical integration thereby achieving their profit margins through the added value of assembly. In the cases of the latter, the ballast becomes the most expensive component item. In many instances, the ballast cost can be as much as one half of the total fixture cost, thereby making initial cost to the OEM a crucial factor.

On the plus side for electronic ballasts is the inherent increases in efficacy which is a major factor in life cycle costing. Further there are many savings associated with the smaller size and lower weight of the electronic units. Savings can be made in smaller size packaging of fixture design and in lower freight costs. Freight costs can be dramatically emphasized with the 400 watt ballasts. For a core and coil unit which weighs typically thirty five (35) pounds, only one unit could be shipped in a package just under the UPS fifty pound limit. A coast-to-coast shipment of the latter would be $14.14. Whereas seven (7) solid state 400 watt units at seven (7) pounds each could be shipped in

a single package UPS coast to coast for $18.27 or $2.67 per ballast or stated in terms of percentage, an eighty one percent (81%) freight cost savings!

In conclusion, cost is the major factor in the development of major market potential for electronic ballasts. The demand elasticity increases dramatically as the electronic units are priced the same as or lower than core and coil equivalents.

DEVICE & TECHNOLOGY CONCERNS

Reliability of the new electronic ballast is the primary concern of potential users. Often advanced is the argument that it is theoretically impossible for a relatively complex electronic device to be as trouble free or have as long a useful life as the simple core and coil approach. Of equal concern is the impact of the new devices on lamp life.

Although MTBF calculations show that the electronic equivalents are as reliable; and further that years of accumulated experience with similar devices, namely power supplies for computer systems have demonstrated the reliability; the potential user can point out that as yet no long term life study program has been conducted, as yet, to accurately assess the long term reliability of 400 watt electronic ballasts for its effect upon lamps driven by these devices.

Again, as with cost, this concern will disappear as many manufacturers and users are now in the early phases of life studies or are in the process of setting up such evaluation programs as is the New York City Office of General Services which is responsible for all street lighting throughout New York City.

Repairability is another user concern. Core and coil ballasts by nature of construction are non-repairable and as such are considered throw-away items. Solid state ballasts, on the other hand, are repairable. Relative economics will ultimately decide whether in fact units actually do get repaired. With the level of skill and training required to repair solid state ballasts not yet being in place in the lighting industry, along with attendant shipping, removal and reinstallation costs, repairability may not be cost justified. However the final determination will be weighed against per unit initial cost. If a wide enough differential exists in the cost of solid state over core and coil, the more likely repairability will be given detailed analysis.

Product support from the ballast manufacturer is a further user concern. This is seemingly a valid issue from a psychological brand recognition standpoint. The user is confortable with a G.E., Sylvannia or Westinghouse endorsed product. He is less comfortable with the newcomers to the industry of Datapower, Lumenoptics, EETech, etc. To resolve this issue, the newcomers will require considerable sales promotion to promote brand image. Further, the new entrants will have to demonstrate high quantity production capabilities along with substantive staying power through a strong financial balance sheet. As important as any of the above factors is for the new manufacturers to be able to demonstrate technical excellence. This applies not only to their own technologies but to the lighting industry as well. In the H.I.D. area in particular, a firm foundation in lamp design and plasma physics is seen as mandatory. The latter is particularly important in the H.I.D. segment with the complexities

of metal halide and high pressure sodium wherein starting, restarting, dimming, lumen maintenance, maintaining color standards and or color correction objectives require intimate lamp construction and gas excitation knowledge. In the case of Datapower, lamp manufacturers have been extremely appreciative of this strong technology base. To quote one lamp manufacturer, "not enough joint development has occurred to achieve the optimum synergism of solid state ballasts combined with lamps designed for solid state to exploit the mutual advantages of both."

NEW APPLICATIONS

Further compounding the difficulty in making market size and growth rate estimates is the ubiquitous segmentation that will occur through new applications.

The capability for the new devices to be computer addressed allows for the electronic ballasts to be integrated into totally new system approaches to energy management. Manual and photo electric dimming capabilities within local or remotely provides for many new applications in area lighting, parking lots, billboards, etc.

The features of no perceptible flicker or strobe gives rise to many new applications for H.I.D. indoor lighting in manufacturing plants. In particular, the dangerous strobe effect with moving machinery has now been eliminated.

CONCLUSIONS

Extrapolating from user interviews and preliminary requests for quotation, it appears that the market for solid state 400 watt H.I.D. ballasts will grow slowly from 1981 through 1983 to a total quantity of 300,000 ballasts. Given an equivalent core and coil

price in large quantities of $35.00 per unit yields a market sized in dollars of approximately $10,000,000.00.

The market growth rate will vary proportionately to number conflicting variables:

- Solid state ballast initial costs
- Ability of new manufacturers to use experience curve pricing for market penetration
- Pay back period for solid state premium pricing
- Kilowatt per hour costs
- Core and coil ballast pricing
- Tax incentives for energy saving devices
- Overall energy legislation
- Resolving user concerns about new manufacturers, devices and technology and the reliability of same
- Construction new starts
- Retrofit and rehabilitation considerations for existing ballasts
- New applications

DATAPOWER INC. 3328 WEST FIRST STREET • SANTA ANA, CALIFORNIA 92703 • PH. (714) 775-2000
TWX 910-595-1560

400 WATT HIGH INDENSITY DISCHARGE

SOLID STATE BALLAST SPECIFICATION

Datapower 400 Watt H.I.D. units have proven to be advantageous over the standard core and coil units in many ways; specifically in the areas of increased efficiency, improved regulation, precise control of light output and power consumption.

. High Power Factor	-	.95 @ 400 watts with series capacitor.
. Brown Out Protection	-	Storage of one to several cycles of line power.
. Line Regulation	-	Output power variation of 2% from high line to lowline versus 15% for standard core and coil.
. Efficiency (AC Input to Lamp Output)	-	88% @ 400 watts, 82% @ 100 watts versus 83% for standard core/coil ballast.
. Efficacy	-	+9% at 100% relative light intensity. (with respect of core & coil ballast).
. Low Weight	-	7 pounds versus 35 pounds.
. Dimming	-	Remote or local control; 5% to 100% light output.
. Multiple Use	-	Ballast can be configured for mercury and high pressure sodium lamps at various wattage levels.
. Flicker and Strobe	-	Flicker index below .01, flicker 1.5% No Perceptible strobe.
. Input Voltage	-	120V, 240V, 277V options.
. Output Power	-	100 watts to 400 watts adjustable.

This report was done with support from the Department of Energy. Any conclusions or opinions expressed in this report represent solely those of the author(s) and not necessarily those of The Regents of the University of California, the Lawrence Berkeley Laboratory or the Department of Energy.

Reference to a company or product name does not imply approval or recommendation of the product by the University of California or the U.S. Department of Energy to the exclusion of others that may be suitable.

TECHNICAL INFORMATION DEPARTMENT
LAWRENCE BERKELEY LABORATORY
UNIVERSITY OF CALIFORNIA
BERKELEY, CALIFORNIA 94720