Presented at the Particle Accelerator
Conference, San Francisco, CA,
March 5-7, 1973

LBL-1390
c.2

SUPERCONDUCTING BEAM-TRANSPORT MAGNETS FOR THE BEVATRON

William S. Gilbert, Robert B. Meuser, Ferd Voelker,
Robert A. Kilpatrick, William F. Eaton,
Fred L. Toby, and Robert C. Acker

March 1973

Prepared for the U.S. Atomic Energy Commission
under Contract W-7405-ENG-48

TWO-WEEK LOAN COPY

This is a Library Circulating Copy which may be borrowed for two weeks. For a personal retention copy, call Tech. Info. Division, Ext. 5545

LAWRENCE BERKELEY LABORATORY
UNIVERSITY OF CALIFORNIA
BERKELEY

LBL-1390
c.2

DISCLAIMER

This document was prepared as an account of work sponsored by the United States Government. While this document is believed to contain correct information, neither the United States Government nor any agency thereof, nor the Regents of the University of California, nor any of their employees, makes any warranty, express or implied, or assumes any legal responsibility for the accuracy, completeness, or usefulness of any information, apparatus, product, or process disclosed, or represents that its use would not infringe privately owned rights. Reference herein to any specific commercial product, process, or service by its trade name, trademark, manufacturer, or otherwise, does not necessarily constitute or imply its endorsement, recommendation, or favoring by the United States Government or any agency thereof, or the Regents of the University of California. The views and opinions of authors expressed herein do not necessarily state or reflect those of the United States Government or any agency thereof or the Regents of the University of California.

SUPERCONDUCTING BEAM-TRANSPORT MAGNETS FOR THE BEVATRON*

William S. Gilbert, Robert B. Meuser, Ferd Voelker, Robert A. Kilpatrick,
William F. Eaton, Fred L. Toby, Robert C. Acker

Lawrence Berkeley Laboratory
University of California
Berkeley, California

Presented at
the 1973 Particle
Accelerator Conference

Introduction

Two superconducting dc beam-transport magnets have been built and tested, and they are being installed on a secondary particle beam of the Bevatron. They are a dipole (bending magnet) and a quadrupole doublet (focusing magnet). Both have clear room-temperature aperture diameters of 8-in., iron flux-return yokes, and will be cooled by a Cryogenic Technology, Inc. Model 1400 refrigerator. Nominal field strengths are 40 kG and 6 kG/in. respectively. Sufficient controls, instrumentation, and interlocking are provided to permit routine operation by the Bevatron operating crew. The main parameters are shown in Table 1. Drawings of the magnets appear in Figs. 1 and 2.

Chronology

The specifications were established in December of 1969. A 10-in. aperture diameter was specified for the dipole. However, a cryostat for a 6-in.-bore dipole had been partially built, starting in mid-1968, but the project had been cancelled. In the interest of economy, the decision was made to use the cryostat for the Bevatron dipole magnet. The bore diameter specification had to be reduced to 8-in. to provide sufficient room for the thickness of winding required to produce the specified field strength.

Two practice layers for one pole of each magnet were wound and tested in May 1970. Winding of the dipole started in mid-1970. Various groups of layers were run in liquid helium as the fabrication progressed. The fabrication was completed, and the dipole winding was tested in a vertical dewar with no iron yoke in December 1970. In March 1971 the modifications to the Dipole cryostat were completed and the cryostat was tested. Leaks developed in the gasketed joints in the helium vessel. The magnet was installed, and after unsuccessful attempts to get the gasketed joint to maintain a seal, the joints were welded. In August 1971 the magnet was operated and was transitioned three times at central field values of 33.5, 37.5, and 40.2 kG.

* This work performed under the auspices of the Atomic Energy Commission.

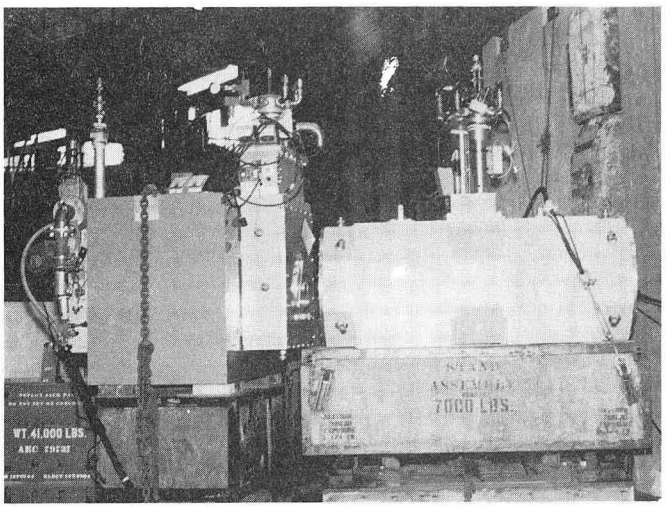

Figure 3 The magnets during installation at the Bevatron

By March 1971 one quadrupole winding had been completed. The superconductor was old, reworked material of poor quality. It was decided to delay construction of the second quadrupole until better material could be obtained. Winding of the second quadrupole was completed in August 1971, and at that time the doublet was tested in a vertical dewar without iron. Shortly thereafter the cryostat was completed and the windings were installed.

The project was delayed by the greater priority placed on the pulsed-magnet program during the latter part of 1971 and most of 1972. In September the decision of where to install the magnets at the Bevatron was made. Both magnets were operated on the 500 Inc. Model 1200 refrigerator, and extensive magnetic field measurements made, in December 1972. Installation at the Bevatron started early in February 1973.

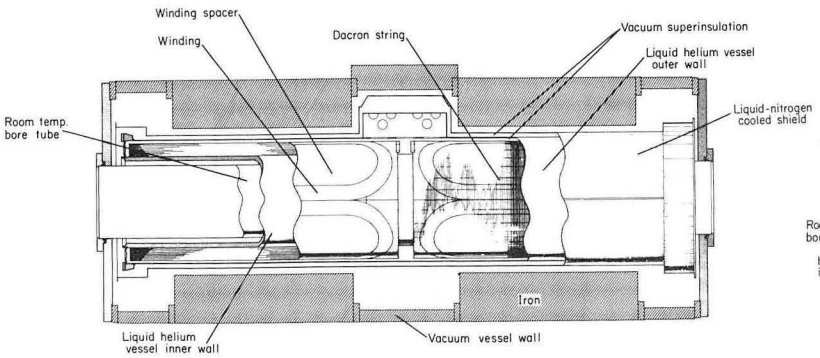

Figure 2 Superconducting quadrupole doublet

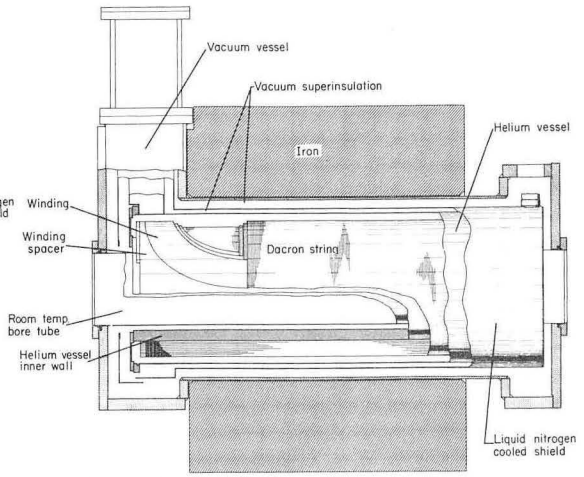

Figure 1 Superconducting dipole magnet

TABLE 1 - Parameters

		Dipole	Quadrupole Doublet
Dimensions			
Aperture diam.	in (cm)	7.9 (20.1)	7.9 (20.1)
Helium vessel inside diam.	in (cm)	8.93 (22.7)	9.0 (22.9)
Winding inside diam.	in (cm)	11.43 (29.0)	9.95 (25.3)
Winding outside diam.	in (cm)	14.87 (37.8)	12.73 (32.3)
Iron yoke inside diam.	in (cm)	20.0 (50.8)	16.0 (40.6)
Iron yoke outside dimensions	in (cm)	48x40 (122x102)	26 sq (66 sq)
Iron yoke length	in (cm)	31.1 (79.9)	20 (50.8) each
Effective magnetic length	in (cm)	32.85 (83.4)	24.9 (63.2) each
Overall winding length	in (cm)	40.5 (102.9)	29.0 (73.7)
Overall length of cryostat	in (cm)	53.3 (135.4)	69.4 (177)
Gross weight	lb (kG)	16000 (7000)	8000 (3600)
Windings			
Total conductor	ft (in)	16500 (5030)	8500 (2600) each
Number of turns per pole	- -	1162	422
Number of layers	- -	12	10
Performance			
Magnetization curve slope		67.0 G/A	9.04 G/in-A (3.56G/cm-A)
Field at mid-length			225 G/A
Integral (-∞ to + ∞)		2201 G-in/A(5590 G-cm/A)	
Maximum performance achieved			
Current, without iron	A	622 [1]	778 [1] | 804 [1]
Current, with iron	A	600 [1]	600 [2] | 750 [2]
Field at mid-length with iron		40.2 kG	5.42(2.13)[2] | 6.78(2.67) [2] kG/in(kG/cm)
Integral (-∞ to +∞)		1321 kG-in (3355 kG-cm)	1350 | 168.8 kG
Stored energy	kJ	0.66 MJ at 40 kG	0.15 MJ each at 2.4 kG/cm

[1] Went normal.
[2] did not go normal.

Performance

Maximum Field Strength Achieved

The dipole was transitioned twice without iron, reaching about 90% of short-sample current on the second transion (Fig. 4). After the coil was installed in its cryostat and the iron was added, it was transitioned three times, reaching essentially 100% of the short sample characteristic on the third one, and showing a large training effect.

The quadrupoles were each transioned once without iron, then again when powered in series (Fig. 5). After being installed in the cryostat with the iron yoke they were operated but were not transitioned, as the performance goal had been met.

Magnetic Field Measurements

Extensive magnetic field measurements were performed on both magnets. Each magnet was operated for about two weeks on the Model 1200 refrigerator. Detailed results of the measurements will be presented in internal reports; we present a brief summary here.

Three types of measurements were made: a) rotating-coil multipole measurements, b) longitudinal field profiles, using a short coil that moved along a track, and c) long-coil field integral measurements on a 5 x 5-in. grid.

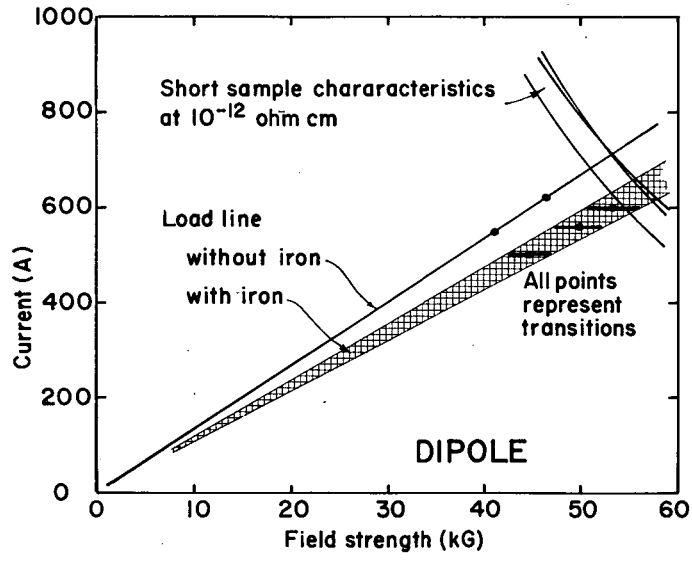

Figure 4 Load lines and short-sample characteristics; dipole.

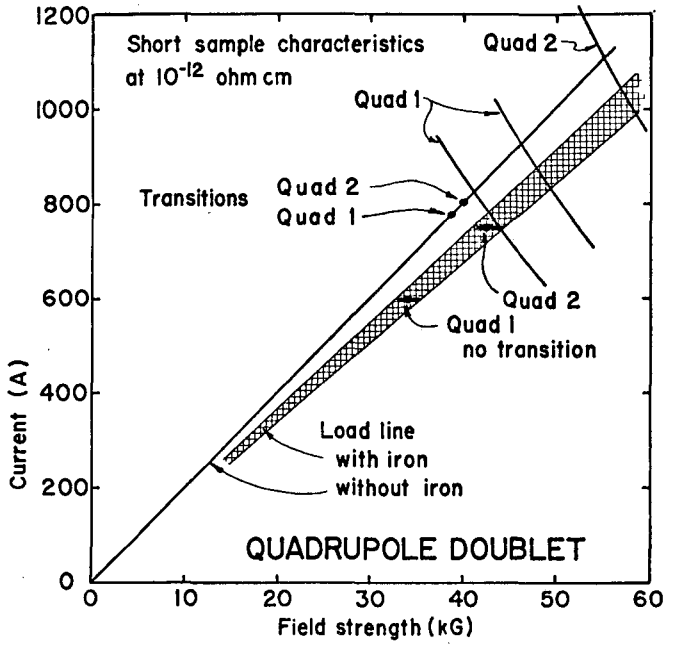

Figure 5 Load lines and short-sample characteristics; quadrupole doublet

Dipole. Integral field maps showed a maximum deviation of 0.1% over the 5 x 5-in. grid at all current values with the exception that two of the corner points (4-in. radius) showed deviations as great as 0.3% at an intermediate field value. Rotating coil measurements showed a sextupole component, referred to a 3.5-in. radius, of 0.4% and a 14-pole component of 0.2%. All others were below 0.1%. Harmonic content did not change with field strength.

Quadrupoles. Twelve-pole component of the integrated field, referred to a 3.5-in. radius, is 0.4 to 0.5%, and the 20-pole about 0.2%. Dipole component was about 0.3%, indicating a displacement of the magnetic axis from the geometric axis of the cryostat flanges, of about .010-in. All other multipole components are below 0.1%. The two quadrupoles are essentially indentical, and the relative magnitudes of the multipole components are independent of excitation.

Winding Design

From the start, our interest centered on magnets comprised of cylindrical layers of varying width. Such magnets are usually made by winding the conductor directly into its proper shape. In 1967 we made such coils by winding flat, racetrack-shaped coils and subsequently bending them to a cylindrical contour. Such a magnet has sizable field aberations at the ends, and the overall length is considerably longer than the effective magnetic length. This is not the case with windings having turned-up ends. However, as the coil diameter at the ends is no greater than that of the straight portions, the design of the cryostat is simplified, and the winding takes less time. Therefore the bent racetrack coil shape was adopted for the Bevatron magnets.

The winding configurations -- the number of turns in each layer -- were determined by trial and error; the method scarcely deserves the dignity of being called an "iterative procedure". Computations were aided by mini-computer programs executed on the BRF -- an on-line Teletype I/O linked to the CDC 6600 computer. The program calculates the integral of the multipole components of the field from the distribution of the integral of the longitudinal components of the current. In an alternate mode, the program calculates simply the two-dimensional field components. The iron is assumed to be infinitely permeable and to extend to infinity in all directions. In fact, however, the iron is considerably shorter than the winding, and the effect of the iron on the field produced by the ends is uncertain. It turned out that it did not make a great difference whether the iron was considered to be totally effective or totally ineffective at the ends.

Another program was used to calculate the three-dimensional field at various points, and especially at points in the end region where the conductor is subjected to the highest fields. In the mathematical model, the winding is a system of straight-line segments of filaments. As the field goes to infinity at a filament, a certain amount of witchcraft must be invoked to obtain results in which one can have confidence, but that is possible. The effect of iron is not included in the calculations, but its effect is estimated, so there is some uncertainty as to the true value of the magnetic field in the end region of the winding.

In principle it is possible to design the winding to give a good field in a two-dimensional sense, and to vary the lengths of the layers so as to also give a good field in the integral sense. This decreases the effective length, and for our low aspect ratio magnets, the decrease was deemed to be intolerable. Therefore, all winding layers have the same overall length, and the turns in each layer are adjusted to minimize the aberrations in the integral field, by making the two-dimensional field aberrations cancel those produced by the ends. The uncorrected central field has aberrations of the order of 3%.

TABLE 4 - Winding dimensions

Layer Number	Dipole No. of turns per pole	Dipole θ (deg.)	Quadrupole No of turns per pole	Quadrupole θ (deg.)
1	148	81.04	61	37.63
2	148	79.12	61	36.65
3	146	76.24	60	35.12
4	146	74.51	60	34.25
5	87	43.41	30	16.71
6	87	42.47	30	16.31
7	75	35.84	30	15.94
8	75	35.09	30	15.57
9	67	30.71	30	15.23
10	67	30.10	30	14.90
11	58	25.55		
12	58	25.06		
Total turns	1162		422	
Inside radius	14.57 cm		12.69 cm	
Outside radius	18.83 cm		16.12 cm	

θ is angular semi-width of the layer, measured from bisector of poles. Radii are to center of the Dacron cord.

We investigated the possibility of staggering the lengths of the adjacent layers to decrease the bulk current density at the point where the field is highest, thereby reducing the peak field. For a fixed overall length, and a fixed relationship between the maximum field and current, the decreased effective length that accompanied the decrease in maximum field resulted in a net decrease in bending and focusing power.

Conductor

Characteristics of the various conductors and their useage are shown in Tables 5 and 6.

TABLE 5 - Conductors

Conductor designation	Cu. S.C.	No. of filaments
A	2.7	130
B	3.0	120
C	3.3	62
D	2.0	246

"C" was reworked from untwisted conductor originally measuring 0.052 x 0.127 in. All conductor measures .045 x .090, has a twist rate of 1 to 2 turns per inch, and was supplied by Cryomagnetics, Inc. "D" is Cryomagnetics "W" material; 1300A at 50 kG at 10^{-12} ohm-cm, oxide coated.

TABLE 6 - Conductor Placement

Application	Conductor
Dipole, layers 1 - 9	A and B
Dipole, layers 10 - 12	B and C
Quadrupole 1	Mostly C, some B
Quadrupole 2	All D

Coil Construction

The conductor, measuring 0.045 x 0.090 in., is wrapped with 1/8-in.-wide by 0.005-thick silicone-impregnated fiberglass tape having thermosetting adhesive on one side (Scotch Electrical Tape No. 67), to provide turn-to-turn insulation. The tape is applied with about 50% coverage to provide ventilating passages between turns. Each flat racetrack-shaped coil is wound around a central island. The island consists of three layers of epoxy-fiberglass sheet between which are placed sheets of 0.005-in.-thick B-stage epoxy impregnated fiberglass cloth. The flat winding and island are encased in an envelope of 1/8-in. soft aluminum sheet. The envelope, winding, and island are pressed into the final shape between matched cylindrical dies, and are baked to set the resin in the islands.

A set of the bent windings is transferred to the magnet. Filler pieces of epoxy-fiberglass, made in the same manner as the islands, are installed at the ends. Windings are secured with a wrapping of braided Dacron cord. (Ashaway Line and Twine Mfg. Co., #50 Dacron cord, white). The cord is applied under a tension of 60 lb -- about half of the breaking strength -- with a pitch of 0.080 inches. The diameter of the cord is 0.049 in., and it squishes out somewhat when wrapped, leaving spaces of about 0.020 in. between turns. The cord serves as layer-to-layer insulation, provides passages for helium permeation, and provides the sole restraint against the magnetic bursting force -- some 500 000 lb. for the dipole -- which seems like a lot to ask of a piece of string. The cumulative pre-tension in the cord generates a compressive stress of 7000 psi in the 1-1/4-in.-thick steel tube on which the dipole is supported. The cord has a negative coefficient of thermal expansion, which would tend to make it loosen when the magnet is cooled. It also has an increasing elastic modulus with decreasing temperature, however. That, together with the prestressing, causes a tightening of the string as it cools in spite of the negative coefficient of expansion. The thermal stress in the cord at helium temperature is about double the room-temperature pre-stress, which should be pretty close to the breaking point. However, we have used the cord on many systems and have tested it rather extensively, and have never had a failure.

The stainless steel support tube is subjected to bending forces tending to make the cross section elliptical, and in addition, to hoop compression resulting from the tension in the cord. The combined stress, for the dipole, is about 65 000 psi, compared with a 0.2% offset yield strength of 89 000 psi at 20 K (Kromark 55).

Cryostats

Dipole Cryostat (Fig. 1)

The stainless steel tube to which the winding is secured serves as the inner wall of the helium vessel. A flanged thin-walled cylinder slightly larger than the outer wall. The ends are covered by plates that are bolted and gasketed to the cylinders. The 0.010-in. Mylar gaskets did not make a reliable seal at liquid helium temperature, and the joints were eventually welded. Risers at the ends, in which the various utilities are carried, are attached to the vessel with Conoseal flanges.

The helium vessel is surrounded with multilayer insulation consisting of 20 layers of 1/4-mil Mylar, aluminized on both sides, and separated by two layers of Nylon netting. A stainless steel liquid nitrogen cooled shield surrounds the helium vessle. The nitrogen shield is covered with multilayer insulation having only one layer of netting between layers of Mylar. The warm-bore tube is wrapped with multilayer insulation in the middle of which are sandwiched strips of soft aluminum foil which are attached to the end plates of the nitrogen shield. The nitrogen shield is supported from the helium vessel on fiberglass cones. A welded aluminum vacuum vessel surrounds the liquid nitrogen shield. The iron flux-return yoke is made in two pieces that are assembled over the cylindrical center region of the vacuum vessel.

Support of the helium vessel is provided by an overconstrained system of ten titanium tension rods Two sets of four rods each fix the vertical and lateral position at each end, and resist rotation about the longitudinal axis. An additional pair of tension rods, running the entire length of the vessel, provide longitudinal constraint. A point on each support rod is thermally connected to the liquid nitrogen shield. The rods are as thin as structural integrity permits, and as long as the dimensions of the vessel will accommodate, in order to minimize the heat leak. As a result, the system is rather springy. Pegs which project inward from the vacuum vessel can be screwed into contact with the helium vessel. These "shipping stops" relieve the support-rod system of shock loads while the vessel is moved about. They are electrically insulated from the vacuum vessel, and can be used as micrometers to monitor the position of the helium vessel when it is cold.

The measured heat leak is 5 ℓ/hr at full current.

Quadrupole Cryostat (Fig. 2)

The quadrupole cryostat has few features in common with the dipole cryostat, which was designed more than a year earlier. One of the end plates of the helium vessel is welded to the stainless steel tube that carries the winding. The other end plate is welded to the outer cylindrical shell, and a turned-in flange is provided at the other end. Sheet Mylar gaskets provide the seals. Access port covers in the middle of the vessel are similarly gasketed. The outer cylindrical wall of the helium vessel is thin, and as it is in good thermal contact with the cold helium it cools rapidly. The opposite is true for the inner cylinder. The result is a great difference in the rate of thermal contraction of the two cylinders, causing the heads to dish. To decouple the dishing of the head -- which might tend to make the gasket leak -- from the flanges, circumferential grooves are cut into the end plates to form flexural hinges (Fig. 6). It was not possible to make the hinges so thin as to keep the bending stresses below the yield strength should the magnet be cooled too rapidly. Therefore, temperature sensors were placed on the shells to enable regulation of the cooling rate so as to keep the temperature difference below about 30 C.

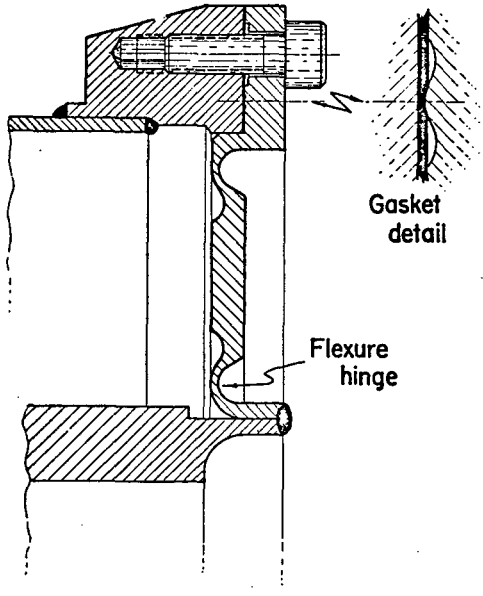

Figure 6 Quadrupole helium-vessel closure

Support of the coils is provided by an overconstrained system of eight short epoxy-fiberglass compression struts (Figs. 7 and 8). The four struts at each end do not lie in a plane, as the tension rods on the dipole do, but rather lie on the surface of a cone. They therefore provide longitudinal constraint, so additional struts are not needed for that purpose.

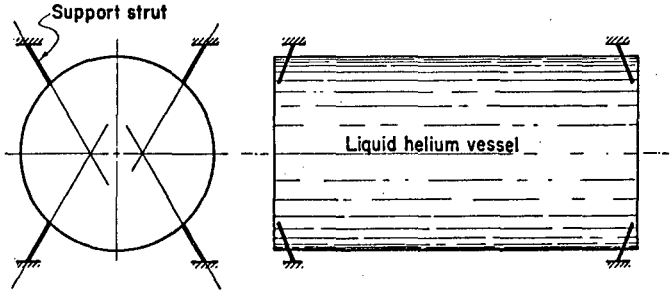

Figure 7. Quadrupole helium-vessel support system; schematic

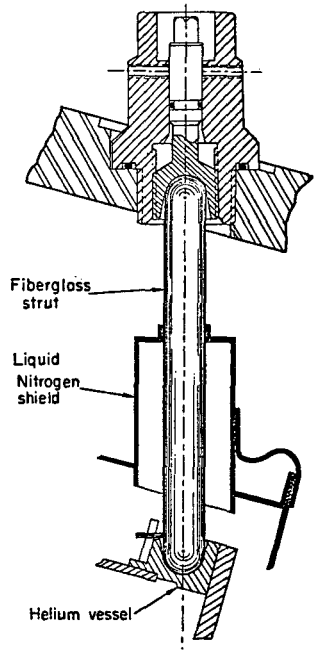

Figure 8 Quadrupole support-strut detail

The struts are canted at an angle chosen to minimize thermal stresses. If the strut does not change length as the helium vessel is cooled, then the condition for zero thermal stress is that the strut be normal to a line connecting the cold end of the strut with the point on the vessel that is not supposed to move; the centroid in the present case (Fig. 9). If the strut changes length too, the angle must be slightly different. The struts can be quite short without causing excessive heat leak. They were, therefore, placed entirely outside of the helium vessel and require no increase in the length of the vacuum vessel. As the support system is quite stiff and strong, no shipping stops are provided.

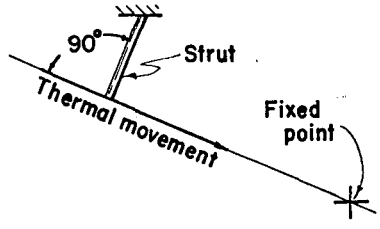

Figure 9 Strut arrangement for zero thermal stress

The iron flux-return yokes serve as part of the vacuum vessel. Each yoke is made of four 5-in.-thick plates of SAE 1010 steel which are ground flat on the mating surfaces. Just prior to assembly, a bead of Dow Corning Silastic 732 RTV is applied to the surface of each plate near the edge of the hole. Upon assembly, the Silastic squashes flat, cures, and provides a vacuum seal. The plates are joined by skip welds on the outside. Finally, the hole is finish bored. A fabricated steel section is bolted and gasketed between the two yokes, and a similar section attached to each end. Aluminum plates cover the ends. A flangeless 8-in.-diam. bore tube, sealed to the end plates with external O-rings, completes the vacuum envelope.

The measured heat leak is 7 ℓ/hr at full current.

LEGAL NOTICE

This report was prepared as an account of work sponsored by the United States Government. Neither the United States nor the United States Atomic Energy Commission, nor any of their employees, nor any of their contractors, subcontractors, or their employees, makes any warranty, express or implied, or assumes any legal liability or responsibility for the accuracy, completeness or usefulness of any information, apparatus, product or process disclosed, or represents that its use would not infringe privately owned rights.

TECHNICAL INFORMATION DIVISION
LAWRENCE BERKELEY LABORATORY
UNIVERSITY OF CALIFORNIA
BERKELEY, CALIFORNIA 94720