LBL-14106

LBL--14106

DE82 014472

STOCHASTIC COOLING*

Joseph Bisognano and Christoph Leemann

March 1982

Accelerator and Fusion Research Division
Lawrence Berkeley Laboratory
University of California
Berkeley, California 94720

DISCLAIMER

This book was prepared as an account of work sponsored by an agency of the United States Government. Neither the United States Government nor any agency thereof, nor any of their employees, makes any warranty, express or implied, or assumes any legal liability or responsibility for the accuracy, completeness, or usefulness of any information, apparatus, product, or process disclosed, or represents that its use would not infringe privately owned rights. Reference herein to any specific commercial product, process, or service by trade name, trademark, manufacturer, or otherwise, does not necessarily constitute or imply its endorsement, recommendation, or favoring by the United States Government or any agency thereof. The views and opinions of authors expressed herein do not necessarily state or reflect those of the United States Government or any agency thereof.

*This work was supported by the Director, Office of Energy Research, Office of High Energy and Nuclear Physics, High Energy Physics Division, U. S. Dept. of Energy, under Contract No. DE-AC03-76SF00098.

MSW

STOCHASTIC COOLING

Joseph Bisognano and Christoph Leemann
Lawrence Berkeley Laboratory
University of California
Berkeley, CA 94720

1. INTRODUCTION

Stochastic cooling is the damping of betatron oscillations and momentum spread of a particle beam by a feedback system. In its simplest form, a pickup electrode detects the transverse positions or momenta of particles in a storage ring, and the signal produced is amplified and applied downstream to a kicker. The time delay of the cable and electronics is designed to match the transit time of particles along the arc of the storage ring between the pickup and kicker so that an individual particle receives the amplified version of the signal it produced at the pick-up. If there were only a single particle in the ring, it is obvious that betatron oscillations and momentum offset could be damped. However, in addition to its own signal, a particle receives signals from other beam particles. In the limit of an infinite number of particles, no damping could be achieved; we have Liouville's theorem with constant density of the phase space fluid. For a finite, albeit large number of particles, there remains a residue of the single particle damping which is of practical use in accumulating low phase space density beams of particles such as antiprotons. It was the realization of this fact that led to the invention of stochastic cooling by S. van der Meer in 1968.[38]

Since its conception, stochastic cooling has been the subject of much theoretical and experimental work. The reader is directed to the references for a thorough review of its development. The earliest experiments were performed at the ISR in 1974, with the subsequent ICE studies firmly establishing the stochastic cooling technique. This work directly led to the design and construction of the Antiproton Accumulator at CERN and the beginnings of $p\bar{p}$ colliding beam physics at the SPS. Experiments in stochastic cooling have been performed at Fermilab in collaboration with LBL, and a design is currently under development for a $\bar{p}$ accumulator for the Tevatron.

2. A QUALITATIVE DESCRIPTION OF STOCHASTIC COOLING

To clarify the basic issues of stochastic cooling, we will first give a qualitative description of the betatron oscillation cooling system sketched in Fig. 1. A pickup detects the transverse position y_i of each of N particles in a storage ring. Ideally, the pickup response will be proportional to the transverse position of the particles. The signal is amplified and applied to a kicker structure one quarter of a betatron wavelength downstream. If the electronics has a bandwidth W, the effective duration of a single particle pulse at the kicker is approximately $1/2W$. (This

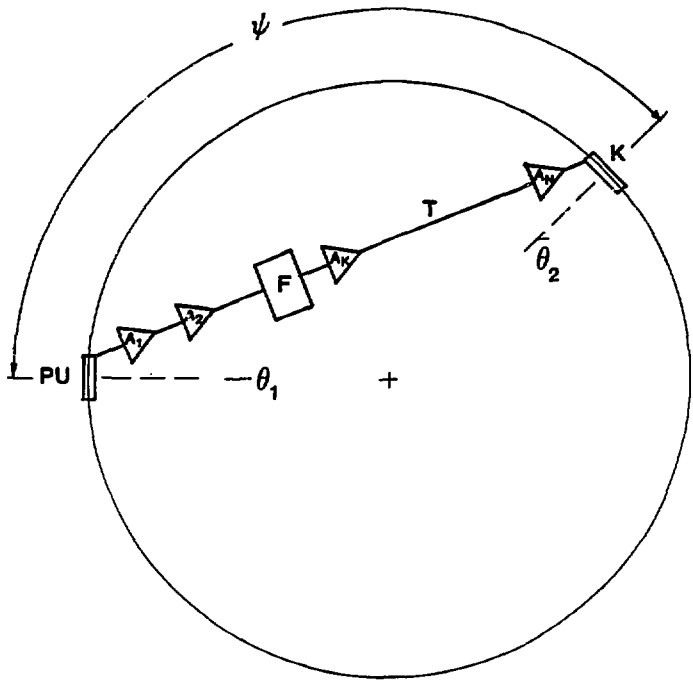

XBL 823-8197

Fig. 1. Schematic of Stochastic Cooling System

$A_1, A_2 \ldots A_N$:	Amplifiers
PU:	Pick-Up Electrode Array
K:	Kicker Electrode Array
F:	Filter(s) (for momentum cooling)
$\psi(\theta_2, \theta_1)$:	Betatron phase advance from θ_1 to θ_2 $\left(= \frac{2n+1}{2}\pi \text{ for transverse cooling}\right)$

is just a manifestation of the Fourier uncertainty principle between time t and its conjugate variable frequency f: $\Delta t \Delta f \geq$ constant.) Thus, when the ith particle passes through the kicker, it receives an impulse from $n = N/2WT$ particles, where T is its revolution period. This impulse changes the betatron angle y_i which, because of the quarter betatron wavelength separation of the pickup and kicker, effectively corrects the betatron oscillation at the pickup by

$$y_i \to y_i - gy_i - g \sum_{\substack{j=1 \\ j\neq i}}^{n} y_j \tag{1}$$

where g models the gain of an idealized pickup-amplifier-kicker system. The change in y_i^2 is then

$$\Delta y_i^2 = - 2gy_i^2 - 2g \sum_{\substack{j=1 \\ j\neq i}}^{n} y_i\, y_j + g^2 \sum_{j=1}^{n} y_j^2 + g^2 \sum_k \sum_{\substack{j \\ k\neq j}} y_j\, y_k \tag{2}$$

Amplifier noise will introduce an additional positive term in (2) proportional to the noise power of the system; we ignore this effect for the moment. We can now attempt to average this expression over the particles in the ring. For the first pass through the system, the betatron positions are independent and uncorrelated, that is $\langle y_i y_j \rangle = 0$ for $i \neq j$. Then equation (2) reduces to

$$\langle \Delta y^2 \rangle = - 2g \langle y^2 \rangle + g^2 n \langle y^2 \rangle \tag{3}$$

The largest reduction in $\langle y^2 \rangle$ occurs when $g = 1/n = 2WT/N$. For this value of g, the rms betatron amplitude damps at a rate

$$\frac{1}{\tau} = \frac{W}{2N} = \frac{1}{4nT} \tag{4}$$

where a factor of 2 is lost in averaging over the phase of the betatron oscillation and another factor of 2 in changing variables from mean squared values $\langle y^2 \rangle$ to rms amplitude $\langle y^2 \rangle^{1/2}$. Equation (4) is the basic cooling relation between rate, bandwidth, and number of particles. Physically, n represents the number of particles which interact during a correction step, and $1/n$ is the optimal single particle damping per step. Greater bandwidth reduces the size of this "sample" and allows faster damping. In the limit of an infinite number of particles (where the beam becomes a continuous fluid), there can be no damping. Typical systems will have bandwidths of hundreds of megahertz to several gigahertz, revolution frequencies of the order of a megahertz, particle number between 10^6 to 10^{11}, and cooling times in seconds to hours. A similar analysis can be applied to momentum cooling with the y parameter

now interpreted as the energy offset from some desired central energy.

The above results were derived under the condition that $\langle y_i y_j \rangle = 0$ and are strictly applicable only on the first pass of the beam through the feedback system. After the first correction, we have

$$y_i\, y_j \rightarrow \left(y_i - gy_i - g \sum_{\ell \neq i} y_\ell\right)\left(y_j - gy_j - g \sum_{k \neq j} y_k\right) \tag{5}$$

and even if $y_i y_j$ is initially zero, there now appear negative cross terms; e.g., $-gy_j^2 - gy_i^2$. In other words, the feedback system has produced correlations among the beam particle positions. It is apparent from equation (2) that such negative correlations can act to degrade the cooling. In fact, if there is no revolution frequency spread of the particles, these correlations will grow and ultimately stop the cooling process. Recall that only a fraction n/N of the particles in the ring effectively interact during a single correction. If there is a spread in revolution frequency, the members of this sample of n particles will change, and the growth and long term effects of the correlations will be limited. As we shall see, if there is sufficient frequency spread, the correlation becomes negligible and the optimal rate of equation (4) can be obtained.

The development of correlation is a coherent effect which is closely related to beam instabilities. In fact, if the sign of the gain of the feedback system were reversed, instabilities could be induced. In this context the notion of Landau damping describes how frequency spread "breaks up" incipient instabilities, and we will find in the detailed mathematical analysis of cooling dispersion integrals of the same form as encountered in instability theory. An estimate of the rate of growth of these correlations can be obtained by summing equation (1) over the n particles which interact. We have

$$\frac{1}{n} \sum_{i=1}^{n} y_i \equiv \bar{y} \rightarrow \bar{y} - ng\bar{y} \tag{6}$$

If there were no frequency spread, the average transverse position of the beam would damp at a rate

$$\left(\frac{1}{\tau}\right)_{\text{coherent}} = -\, ng \tag{7}$$

which is n times faster than the single particle cooling. The signal would damp away and the cooling would stop. If the sign of the gain were reversed, there would be a coherent instability at this rate.

The theoretical analysis of stochastic cooling can be approached from a variety of perspectives with a fundamental dichotomy between frequency domain and time domain analyses. At the heart of the matter is the existence of two distinct time scales. One corresponds to the single particle cooling rate of equation (4), with characteristic times of the order of seconds or longer. The other scale is that of the coherent effects of Eq. (7) — instabilities, signal suppression, and Landau damping — with times typically of the order of milliseconds. The coherent phenomena are rapid compared to the gross cooling rate and are best treated in the frequency domain with the revolution frequencies and betatron amplitudes treated as constant. The frequency domain notions of power spectrum, bandwidth, filters, and phase provide the basis for analysis. The particle dynamics, on the other hand, which describe the slow damping of phase space are clearest in the time domain with the Fokker-Planck equation as the main tool. This "two-timing" approach is basic to understanding stochastic cooling, and is implicit in most of the literature on the subject. It also provides constraints on computer simulations, where care must be taken with the use of relatively few pseudo particles in a simulation that these two time scales do not become comparable. Otherwise, extrapolation to actual cooling scenarios, which do have two disparate time scales, becomes highly questionable.

3. SCHOTTKY SIGNALS AND SAMPLING

As a particle is cooled, it experiences a succession of kicks from other beam particles. Since the relative positions of the particles change slowly (the frequency spread is often a fraction of 1% of the revolution frequency), there is a coherence among the signals produced by a given particle over many passes through the pick-up as experienced by another particle over many passes through the kicker. This correlation over time is translated in the frequency domain into a non-constant power spectrum of the particle signals; that is, the beam Schottky spectrum.

Consider a single particle circulating in a ring at angular revolution frequency $\omega = 2\pi/T$. The current at a pick-up can be described as a series of delta functions of the form

$$I(t) = e \sum_{n=-\infty}^{\infty} \delta\left(t-t_0-nT\right) \tag{8}$$

where t_0 is some arbitrary time at which the particle is in the pick-up. Since this current is periodic in t, it may be expanded in a simple Fourier series

$$I(t) = \frac{e\omega}{2\pi} \sum_{n=-\infty}^{+\infty} e^{in\omega(t-t_0)} \tag{9}$$

and we have the basic result that a circulating particle produces a signal at each harmonic of its revolution frequency. This is the single particle longitudinal Schottky signal. Now consider a collection of N particles in the ring. From (9) we immediately have that the total current is

$$I(t) = \sum_{n=-\infty}^{+\infty} \sum_{j=1}^{N} \frac{e\omega_j}{2\pi} e^{in\omega_j(t-t_{oj})}$$

$$= \sum_{j=1}^{N} \frac{e\omega_j}{2\pi} \left(1 + \sum_{n=1}^{\infty} 2 \cos n\omega_j(t-t_{oj})\right) \tag{10}$$

The signal at the pickup is composed of bands in frequency corresponding to each harmonic n, with a width $n\Delta\omega$, where $\Delta\omega$ is the full width of the revolution frequency distribution $f(\omega)$ (normalized to unity). For sufficiently large n, these Schottky bands will touch; there is band overlap. A current sensitive pickup will produce a signal with this frequency structure over its bandwidth.

Suppose that the current is analyzed at frequency $n\omega_0$, where ω_0 is inside the particle frequency distribution, and assume there is no band overlap. Then the squared current in Schottky band n is simply

$$I_n^2(t) = 4\left(\sum_j \frac{e\omega_j}{2\pi} \cos n\omega_j(t-t_{oj})\right)\left(\sum_i \frac{e\omega_i}{2\pi} \cos n\omega_i(t-t_{oi})\right) \tag{11}$$

If there is no correlation in the t_{oi} from a feedback system, the cross terms average to zero and

$$I_n^2(t) = 4\sum_j \left(\frac{e\omega_j}{2\pi}\right)^2 \cos^2 n\omega_j(t-t_{oj}) \tag{12}$$

and

$$I_n^{rms} = \left(\frac{e\bar{\omega}}{\pi}\right) \sqrt{2N} \tag{13}$$

where $\bar{\omega}$ is the average revolution frequency. If this current were analyzed by a spectrum analyzer with resolution $\Delta\Omega$, about frequency $\Omega = n\omega_0$, then only particles such that $|n(\omega_0-\omega_j)| < \Delta\Omega/2$ would enter into the sum and we have

$$I_n^{rms}(\Omega) = \frac{e\omega_0}{\pi} \sqrt{2N}\sqrt{f\left(\frac{\Omega}{n}\right)\frac{\Delta\Omega}{n}} \tag{14}$$

Thus, for uncorrelated beam parameters, the power (proportional to $(I^{rms}(\Omega))^2$) in the nth Schottky band mirrors the frequency distribution, with its width and height proportional to n and $1/n$, respectively. However, if there is correlation among the t_{oj}, the cross terms can act to deform the Schottky spectrum. As we have seen in the previous section, a stochastic cooling feedback system can create correlations, and, in fact, rapid "Schottky signal suppression" is commonly observed when cooling systems are turned on. Other particle interactions through space charge and wall impedances can also induce correlations which modify the Schottky signals; this will be discussed quantitatively in Section 4. This effect is analogous to the polarization and Debye shielding of plasma physics, where a "dielectric function" is used to describe the details. We will derive a similar "suppression factor."

For the remainder of this section, we will use our knowledge of the Schottky spectrum to analyze longitudinal stochastic cooling without shielding in order to introduce some important physical issues. Betatron cooling can be analyzed similarly, with averaging over rapid betatron oscillations and slowly varying amplitudes. In practice, cooling systems often operate in this regime where the details of feedback shielding are relatively unimportant.

The signal produced at the pick-up by I_T can be amplified and applied to a kicker for longitudinal (momentum) cooling. The correction signal at the kicker at time t will have the spectral form of the current I_T, modified by the gain of the system. The kicker signal $k(t)$ will generally be of the form

$$k(t) = \frac{2\pi}{\omega_o}\sum_j\sum_n G(n\omega_j, x_j)\, e^{in\omega_j(t-t_{oj})} \tag{15}$$

where $G(\Omega, x_j)$ represents the electronic transfer character of the system at electronic frequency (that is, the Fourier conjugate of time) Ω and particle energy x_j. With this functional form we are allowing both a direct energy variation of the gain (e.g., by transverse position variations due to momentum dispersion) and electronic variation (e.g., through a filter structure). A similar expression can be derived for a transverse dipole signal, with multiplication by the betatron position yielding sideband structure at $\pm\, Q\omega_j$. In general, G will roll-off for high frequencies and the sum in (12) will converge absolutely.

Let us now focus attention on a single particle, say the ith. It does not experience the signal at the kicker continuously, but rather samples it once every revolution. If the particle is at the kicker at time τ_i plus multiples of the revolution period, the correction signal it receives is actually

$$k_i(t) = \sum_m \delta(t-\tau_i-mT_i)\, k(t) \tag{16}$$

That is, it samples the kicker signal only when it is in the kicker (assumed very short). Again, we may expand the series of delta functions in a Fourier series and obtain

$$k_i(t) = \sum_j \sum_n \sum_m G(n\omega_j, x_j)\, e^{i(n\omega_j - m\omega_i)t}\, e^{i(n\omega_j t_{oj} - m\omega_i \tau_i)} \tag{17}$$

Note that k_i is the sum of k's translated in frequency by all multiples of ω_i. Expression (17) is a special case of the "sampling theorem" of signal processing theory.

The energy x_i of particle i will be changed according to

$$\frac{dx_i}{dt} = k_i(t) \tag{18}$$

Since cooling is a slow process relative to the revolution frequency, the effect of the rapidly oscillating part of k_i is negligible unless there is a rapidly growing instability. To simplify matters further, let us assume that there is no band overlap, so the only slowly varying terms occur when $n = m$ in the sum. (This assumption will be dropped in Section 5.) With this approximation, we have

$$\frac{dx_i}{dt} = \sum_j \sum_n G(n\omega_j, x_j)\, e^{in(\omega_j - \omega_i)t}\, e^{in(\omega_j t_{oj} - \omega_i \tau_i)} \tag{19}$$

First consider the self-interaction term; i.e., when $i = j$. We have

$$\left.\frac{dx_i}{dt}\right|_{self} = \sum_{n=-\infty}^{+\infty} G(n\omega_i, x_i)\, e^{in\omega_i(t_{oj} - \tau_i)} \tag{20}$$

The phase factor represents the particle transit time between the pick-up and kicker. The gain function G contains within it a phase factor corresponding to the signal transit time through the amplifier chain and the cable. This phase factor is of the form $\exp(-in\omega_i(\tau))$, where $\tau = \theta/\omega_0$, θ is the azimuthal distance between pickup and kicker, and ω_0 is the frequency of some particle centered in the distribution, with energy x_0. For this particle the phase factors are made to cancel. If the residual energy variation of the gain is of the form $G(n\omega, x) = -g(x - x_0)$, the self-term moves all particles toward the central energy x_0. More complicated gain variations are found in stack cooling systems and will be discussed later. The cancellation of the transit time and electronic delay time factor is only approximate for all but particles with frequency ω_0, and care must be taken to avoid residual phases exceeding 90°, which would heat the beam. In the

literature this effect is described as mixing between pick-up and kicker.

The rms effect of other beam particles requires averaging of x_i^2. As a first approximation, let us average over times short compared to the cooling time, so that the parameters describing k may be considered constant. Then the average change of x^2 per unit time due to other beam particles in time $2S$ is simply

$$\frac{\Delta x_i^2}{\Delta t} = \left(\int_{-S}^{+S} k_i(t')dt' \right)^2 \frac{1}{2S} \tag{21}$$

If we make the further approximation that the t_{0j} are statistically independent, we have

$$\frac{\Delta x_i^2}{\Delta t} = \sum_{\ell}\sum_{j} |G(\ell\omega_j, x_j)|^2 \frac{\sin^2 \ell(\omega_i-\omega_j)S}{\ell^2(\omega_i-\omega_j)^2 S^2} (2S) \tag{22}$$

For short times S, all particles contribute equally to increasing x_i^2. However, for times long compared to a revolution frequency but still short compared to a cooling time, particles within $\pi/S\ell$ of ω_i in frequency dominate. Thus, we have for small perturbations, that a particle reacts principally to a signal in a small neighborhood of harmonics of its revolution frequency. This enhancement of beam noise is a first example of correlation effects in beam cooling.

Equations (20) and (22) can be combined to yield an average correction per unit time of x_i^2 of

$$\frac{\Delta x_i^2}{\Delta t} = \sum_{\ell} 2G(\ell\omega, x_i)\, x_i e^{i\ell\omega_i(t_{0i}-\tau)}$$

$$+ (2S) \sum_{\ell}\sum_{j} |G(\ell\omega_j, x_j)|^2 \frac{\sin^2 \ell(\omega_i-\omega_j)S}{\left(\ell(\omega_i-\omega_j)S\right)^2} \tag{23}$$

Equation (23) is similar to Eq. (3), but contains some correlation effects due to the long time coherence of the sampled Schottky signal. A few simplifying approximations will make the similarities between these two equations more apparent. Let G be constant over a finite bandwidth $(2\pi)W$ in angular frequency. There will be approximately m = Integer part$(4\pi W/\omega_0)$ terms in the sums in (22). Let $mG = -g(x-x_0)$ and let the mixing between pick-up and kicker be negligible. With the sum over j approximated by an integral over the frequency distribution $f(\omega)$ (normalized to unity) and assuming that near neighbors in frequency dominate, we have

$$\frac{\Delta(x_i-x_0)^2}{\Delta t} = \left\{-2g + \frac{g^2 N}{\Omega^2}\sum_{\ell}\int d\omega'\, f(\omega')\, \frac{\sin^2(\omega_i-\omega')S}{\ell^2(\omega_i-\omega')^2 S^2}\cdot 2S\right\}\cdot(x_i-x_0)^2 \tag{24}$$

For times S short compared to the damping time (so that the revolution frequencies remain approximately constant) but long compared to the revolution period, the $\sin^2 x/\pi x^2$ function approximates a delta function, and we have

$$\frac{1}{\tau}\bigg|_{\Delta(x_i-x_0)^2} = \left\{-2g + g^2\left(\frac{N}{m}\right)2\pi\, f(\omega_i)\left[\frac{1}{m}\sum_{\ell}\frac{1}{\ell}\right]\right\} \tag{25}$$

The factor N/m is just the sample size n of Eq. (3). For harmonics ℓ where the Schottky bands touch, $f(\omega)\, 1/m \sum_{\ell} 1/\ell \approx 1/\tau_0$, and (3) and (25) agree, when g of (25) is replaced by g/T and $1/T$ is factored out to obtain the same units. On the other hand, if the Schottky bands are narrow, the effect of the Schottky signal is enhanced over the result in (3), and the cooling is degraded. The rate $1/\tau$ depends on $f(\omega)$. Since $f(\omega)$ will be changing as the longitudinal cooling progresses, an equation for the time development of $f(\omega)$ is necessary for a full description. As we shall see in the next section this time evolution is described by a Fokker-Planck equation. For betatron cooling without simultaneous longitudinal cooling, $f(\omega)$ is constant, and moment equations similar in form to (24) and (25) are often useful.

The analysis so far has singled out one particle (the "cooled" particle), and we have studied in detail the effect of the unperturbed signals of the other particles of the beam, including their long time coherence. In addition, these particles are kicked by the signal from the cooled particle, and thus become carriers for information about it; that is, there is feedback through the beam. The beam becomes polarized and shields the cooled particle from its self interaction. Of course, this assymmetry between cooled particle and other beam particles is not physical, but is an artifact of the description. In the next section an approach is developed which includes both Schottky signal noise enhancement and feedback.

4. KINETIC EQUATIONS FOR LONGITUDINAL COOLING

In this section we will derive a Fokker-Planck equation for longitudinal stochastic cooling which includes both the time coherence of Schottky signals and the shielding induced by the feedback system. Both of these effects are manifestations of correlations. In the usual derivation of the Vlasov equation which describes instabilities in particle accelerators correlation effects are assumed negligible. In addition, there is no dissipative self-interaction; the equations of motion are Hamiltonian. In stochastic cooling systems, it is such a self-interaction term which increases

the phase space density. In what follows, equations are derived for the one particle and two-particle (correlation) density functions. The one particle function is just the usual distribution of the Vlasov equation. The two-particle distribution will describe the effects of correlation. The argument follows closely that used in a plasma physics context to derive the Vlasov equation from "first principles", but allows the system to be non-Hamiltonian.

A. Kinetic Equations for a Non-Liouvillian System

The stage for our analysis is a $2N$-dimensional ensemble space whose elements are vectors $(q_1, p_1, \ldots, q_n, p_n)$. Each vector represents one whole system of N particles with positions q_i and momenta p_i. Consider the ensemble distribution $D(q_1, p_1, \ldots, q_n, p_n)$ describing a collection of these systems of N particles, normalized so that

$$\int dq_1 \ldots dp_n \, D(q_1, \ldots, p_n) = 1 \tag{26}$$

Conservation of the number of ensemble systems is expressed by

$$\frac{\partial D}{\partial t} + \vec{\nabla} \cdot (\vec{u} \, D) = 0 \tag{27}$$

where $\vec{u} = (\dot{q}_1, \dot{p}_1, \ldots, \dot{q}_n, \dot{p}_n)$. If the system dynamics are described by Hamiltonian equations, then (27) reduces to the condition of incompressible fluid flow[24],

$$\frac{dD}{dt} = \frac{\partial D}{\partial t} + \vec{u} \cdot \vec{\nabla} D = 0 \tag{28}$$

that is, Liouville's Theorem. The Vlasov equation may be derived by integrating (28) over $2(N-1)$ variables with D assumed symmetric in the particle variables.

A Hamiltonian description is not applicable to longitudinal cooling. Instead, the dynamics are of the form

$$\dot{p}_i = \sum_j G(q_i, q_j, p_j) \qquad \dot{q}_i = Q(p_i) \tag{29}$$

Equation (27) may still be integrated over $2(N-1)$ or $2(N-2)$ variables to yield equations for one and two particle distribution

functions, but, as we shall see, Liouville's theorem for the one particle distribution will be lost.

Define the one particle distribution by

$$f_1(q_1,p_1,t) = \int dq_2 \ldots dp_n \, D(q_1,p_1,\ldots,q_n,p_n,t) \tag{30}$$

and similarly

$$f_2(q_1,p_1,q_2,p_2,t) = \int dq_3 \ldots dp_n \, D(q_1,p_1,\ldots,q_n,p_n,t) \tag{31}$$

From Eq. (27) we have

$$\frac{\partial f_1}{\partial t} = -\int dq_2 \ldots dp_n \left(\frac{\partial}{\partial q_1} (\dot{q}_1 D) + \frac{\partial}{\partial p_1} (\dot{p}_1 D) \right) \tag{32}$$

With dynamics of the form (29), this reduces under the usual (particle index) symmetry assumption for D to

$$\frac{\partial f_1}{\partial t} + \dot{q}_1 \frac{\partial f_1}{\partial q_1} + (N-1) \frac{\partial}{\partial p_1} \int dq_2 \, dp_2 \, G(q_1,q_2,p_2) \, f_2(q_1,p_1,q_2,p_2,t) +$$

$$+ \left[\frac{\partial}{\partial p_1} \left[G(q_1,q_1,p_1) \, f_1(q_1,p_1,t) \right] \right] = 0 \tag{33}$$

The bracketed term is the addition to the usual kinetic equation without self-interaction and expresses the violation of Liouville's Theorem. It is of the form of the coherent part of a Fokker-Planck equation and induces compression of phase space. The integral in (33) describes interaction with other beam particles and includes the "usual" Vlasov average field effects and also correlation effects that tend to increase the phase space volume and suppress cooling through beam feedback. Both terms together may be interpreted as the divergence of a particle flux. The corresponding equation for f_2 is

$$\frac{\partial f_2}{\partial t} + \dot{q}_1 \frac{\partial f_2}{\partial q_1} + \dot{q}_2 \frac{\partial f_2}{\partial q_2} + (N-2) \frac{\partial}{\partial p_1} \int dq_3 dp_3 \; G(q_1,q_3,p_3) \; f_3$$

$$+ (N-2) \frac{\partial}{\partial p_2} \int dq_3 dp_3 \; G(q_2,q_3,p_3) \; f_3$$

$$+ \frac{\partial}{\partial p_1} G(q_1,q_2,p_2) \; f_2 + \frac{\partial}{\partial p_2} G(q_2,q_1,p_1) \; f_2$$

$$+ \left[\frac{\partial}{\partial p_1} G(q_1,q_1,p_1) f_2 + \frac{\partial}{\partial p_2} G(q_2,q_2,p_2) f_2 \right] = 0 \qquad (34)$$

where f_3 is the three particle distribution function.

As is the case with the usual kinetic equation of plasma physics (BBGKY theory),[24] an infinite hierarchy of relations among the f_n is developing, and some approximation is needed to terminate the sequence. We write

$$f_2 = f_1(q_1,p_1,t) \; f_1(q_2,p_2,t) + g(q_1,p_1,q_2,p_2,t) \qquad (35)$$

$$f_3 = f_1(q_1,p_1,t) \; f_1(q_2,p_2,t) \; f_1(q_3,p_3,t)$$

$$+ f_1(q_1,p_1,t) \; g(q_2,p_2,q_3,p_3,t) + f_1(q_3,p_3,t) \; g(q_1,p_1,q_2,p_2,t)$$

$$+ f_1(q_2,p_2,t) \; g(q_3,p_3,q_1,p_1,t) + h(q_1 \ldots p_3,t) \qquad (36)$$

and now assume that correlation effects are small but not negligible; in particular $h \approx 0$. With this assumption (33) and (34) yield[2,3] (with the distinction N, N-1, N-2 dropped)

$$\frac{\partial f_1}{\partial t} + \dot{q}_1 \frac{\partial f_1}{\partial q_1} + N \frac{\partial f_1}{\partial p_1} \int dq_2 \; dp_2 \; G(q_1,q_2,p_2) \; f_1(q_2,p_2,t) =$$

$$- N \frac{\partial}{\partial p_1} \int dq_2 \; dp_2 \; G(q_1,q_2,p_2) \; g(q_1,p_1,q_2,p_2,t)$$

$$- \left[\frac{\partial}{\partial p_1} \left[G(q_1,q_1,p_1) \; f_1(q_1,p_1,t) \right] \right] \qquad (37)$$

and

$$\frac{\partial g}{\partial t} + \dot{q}_1 \frac{\partial g}{\partial q_1} + \dot{q}_2 \frac{\partial g}{\partial q_2} + N \frac{\partial g}{\partial p_1} \int dq_3\, dp_3\, G(q_1,q_3,p_3)\, f_1(q_3,p_3,t)$$

$$+ N \frac{\partial g}{\partial p_2} \int dq_3\, dp_3\, G(q_2,q_3,p_3)\, f_1(q_3,p_3,t) =$$

$$- N \frac{\partial f_1}{\partial p_1} \int dq_3\, dp_3\, G(q_1,q_3,p_3)\, g(q_2,p_2,q_3,p_3,t)$$

$$- N \frac{\partial f_2}{\partial p_2} \int dq_3\, dp_3\, G(q_2,q_3,p_3)\, g(q_3,p_3,q_1,p_1,t)$$

$$\left.\begin{aligned} &- \frac{\partial}{\partial p_1} G(q_1,q_2,p_2)\, f_1(q_1,p_1,t)\, f_1(q_2,p_2,t) \\ &- \frac{\partial}{\partial p_2} G(q_2,q_1,p_1)\, f_1(q_1,p_1,t)\, f_1(q_2,p_2,t) \end{aligned}\right\} ①$$

$$-\left\{\frac{\partial}{\partial p_1} G(q_1,q_2,p_2)\, g(q_1,\ldots,p_2,t) + \frac{\partial}{\partial p_2} G(q_2,q_1,p_1)\, g(q_1,\ldots,p_2,t)\right\} ②$$

$$-\left[\frac{\partial}{\partial p_1} G(q_1,q_1,p_1)\, g(q_1,\ldots,p_2,t) + \frac{\partial}{\partial p_2} G(q_2,q_2,p_2)\, g(q_1,\ldots,p_2,t)\right] ③$$

(38)

The terms labeled (3) are an addition from the violation of Liouville's Theorem and are of the same order as terms (2). At this level of approximation, terms (2) are normally dropped as second order relative to (1)[21] (they are of the same order as h), and we likewise drop (3) from the analysis. The integrals in this equation are multiplied by the particle number N and in general cannot be considered negligible. With these approximations (38) is formally identical to the usual kinetic equations for two point correlations. The cooling of phase space appears only in the last term of the one-particle distribution Eq. (37). Equation (38), except for the explicit form of interaction, is identical with that of the Lenard-Balescu analysis of plasma physics[21].

B. *Momentum Cooling*

We take as our variables the azimuthal angle θ, and $x = (E-E_0)$, where we assume small energy changes relative to E_0. For simplicity, consider the situation of nonoverlapping Schottky bands. Then the p equation is of the form

$$\dot{x}_i = \sum_j \sum_n G_n(x_j)\, e^{in(\theta_i-\theta_j)} \tag{39}$$

(see Eq. (19), Section 3) where $G_n \equiv G(n\omega_j, x_j)$ is the system transfer function and $G_0(x) = 0$. We also assume that f_1 is independent of θ and g is a function of $\theta_1-\theta_2$ only, that is

$$g(\theta_1,\theta_2,x_1,x_2,t) = \sum_\ell g_\ell(x_1,x_2,t)\, e^{i\ell(\theta_1-\theta_2)} \tag{40}$$

With these simplifying assumptions, (37) reduces to

$$\frac{\partial f_1}{\partial t}(x,t) = -\frac{\partial}{\partial x}\left(\sum_n G_n(x)\, f_1(x,t)\right)$$

$$- N \frac{\partial}{\partial x}\int dx' \sum_n G_n(x')\, g_{-n}(x,x',t) \tag{41}$$

and (35) reduces to

$$\frac{\partial g_\ell}{\partial t} + i\,\ell(\omega_1-\omega_2)\, g_\ell(x_1,x_2,t) =$$

$$-\frac{\partial}{\partial x_1}\left[G_\ell(x_2)\, f_1(x_1,t)\, f_1(x_2,t)\right] - \frac{\partial}{\partial x_2}\left[G_{-\ell}(x_1)\, f_1(x_1,t)\, f_1(x_2,t)\right]$$

$$- N\frac{\partial f_1}{\partial x_1}\int dx_3\, G_\ell(x_3)\, g_{-\ell}(x_2,x_3) - N\frac{\partial f_1}{\partial x_2}\int dx_3\, G_{-\ell}(x_3)\, g_\ell(x_1,x_3) \tag{42}$$

The first term on the RHS of Eq. (41) describes the cooling of phase space by self interaction. The second term describes Schottky signal and feedback effects. In Eq. (42), the first two terms on the right hand side describe the direct effects of beam particles perturbing each other; the last two terms describe how existing coherence limits the correlation growth. The $(\omega_1-\omega_2)$ terms

on the LHS effect mixing through frequency spread and enhance the interaction of particles neighboring in frequency.

Equation (42) may be solved exactly under the assumption that the relaxation time of the correlation g is fast on the scale of variation of f. In terms of our previous analysis, the time scale of coherent effects is rapid compared to the cooling time. We now Laplace transform with respect to time (s being the transform variable), treating f as constant and examine solutions in the dc limit; i.e., taking $s = 0$ poles of the Laplace transform of the "constant" f. On inverting the transform, we have

$$g_\ell(x_1,x_2) = \frac{1}{s + i\ell(\omega_1-\omega_2)} \left\{ -\frac{\partial f_1}{\partial x_1} G_\ell(x_2)\, f(x_2) - \frac{\partial f_1}{\partial x_2} G_{-\ell}(x_1)\, f(x_1) \right.$$

$$\left. - N \frac{\partial f_1}{\partial x_1} \int dx_3\, G_\ell(x_3)\, g_{-\ell}(x_2,x_3) - N \frac{\partial f}{\partial x_2} \int dx_3\, G_{-\ell}(x_3)\, g_\ell(x_1,x_3) \right\} \tag{43}$$

in the limit $s \to 0+$. Define

$$\epsilon_{\pm|\ell|}(x_1) = 1 + \frac{N}{|\ell|} \int_{\eta\to 0_+} dx_2 \frac{\frac{\partial f}{\partial x_2}\, G_{\mp|\ell|}(x_2)}{\eta \pm i(\omega_1-\omega_2)}\ ; \qquad \omega \equiv \omega(x) \tag{44}$$

and

$$H_\ell(x_1) = N \int dx_2\, G_{-\ell}(x_2)\, g_\ell(x,x_2) + f(x_1)\, G_{-\ell}(x_1) \tag{45}$$

Then after multiplying (43) by $G_{\mp|\ell|}(x_2)$ and integrating we have

$$\epsilon_{\pm|\ell|}(x_1)\, H_{\pm|\ell|}(x_1) = G_{\mp|\ell|}(x_1)\, f(x_1)$$

$$- \frac{N}{|\ell|} \frac{\partial f_1}{\partial x_1} \int_{\eta\to 0_+} dx_2 \frac{H_{\mp|\ell|}(x_2)}{\eta \pm i(\omega_1-\omega_2)}\, G_{\mp|\ell|}(x_2) \tag{46}$$

An iterative solution for H with the second term on the RHS assumed small yields

$$H_{\pm|\ell|}(x_1) = \frac{G_{\mp|\ell|}f(x_1)}{\epsilon_{\pm|\ell|}}$$

$$- \frac{N}{|\ell|}\frac{\partial f_1}{\partial x_1}\frac{1}{\epsilon_{\pm|\ell|}} \int_{\eta\to 0_+} \frac{dx_2 |G_{\pm\ell}(x')|^2 f(x_2)}{[\eta \pm i(\omega_1-\omega_2)]\ \epsilon_{\mp|\ell|}(x_2)} \tag{47}$$

as the second approximation.

In the limit $\eta \to 0+$, the Cauchy integral yields π times the integrand plus a principal value integral; i.e.,

$$H_{\pm|\ell|}(x_1) = \frac{G_{\mp|\ell|}\ f(x_1)}{\epsilon_{\pm|\ell|}} - \frac{N}{|\ell|}\frac{\partial f_1}{\partial x_1}\frac{|G_{\pm\ell}(x_1)|^2}{|\epsilon_{\pm\ell}(x_1)|^2} f_1(x_1) \tag{48}$$

$$+ \text{(principal value integral)}$$

For this iterative solution there is approximate cancellation of the principal value integral between $\pm|\ell|$, when the ℓ sum of (41) is performed. For the exact solution (which requires complex plane gymnastics of Wiener-Hopf),[46] the cancellation is complete. The exact result is

$$N\int dx_2\ G_{\pm|\ell|}(x_2)\ g_{\mp|\ell|}(x_1,x_2) =$$

$$\left[\frac{G_{\pm|\ell|}(x_1)\ f_1(x_1)}{\epsilon_{\mp|\ell|}(\omega_1)} - G_{\pm|\ell|}(x_1)\ f_1(x)\right]$$

$$- \frac{N}{|\ell|}\int_{\eta\to 0_+} d\omega' \left|\frac{dx'}{d\omega'}\right| \left|\frac{G_{\pm|\ell|}(x')}{\epsilon_{\mp|\ell|}(\omega')}\right|^2 \frac{\partial f_1}{\partial x'} f_1(x') \frac{1}{\eta \pm i(\omega_1-\omega')} \tag{49}$$

If this relation is inserted into (41), after cancellations between $\pm\ell$, we have

$$\frac{\partial f_1}{\partial t}(x,t) = -\sum_{\ell}\left\{\frac{\partial}{\partial x}\left[\frac{G_\ell(x)\ f_1(x,t)}{\epsilon_{-\ell}(\omega)}\right]\right.$$

$$\left. - \frac{\partial}{\partial x}\left[\frac{N\pi}{|\ell|}\left|\frac{\partial x}{\partial\omega}\right|\left|\frac{G_\ell(x)}{\epsilon_{-\ell}(\omega)}\right|^2 \frac{\partial f_1(x)}{\partial x} f_1(x)\right]\right\} \tag{50}$$

This result is of the form of a nonlinear Fokker-Planck equation. (See Appendix A.) The first term on the right hand side is the coherent cooling of a particle's energy error; the ϵ_ℓ factor describes the feedback of the coherent signal through the beam. The second term contains the diffusion effects of the beam signal, again including feedback. Note that only the value of $f/|\ell|$ (the Schottky noise density for harmonic ℓ) at energy x enters throughout. This is the full statement of Eq. (11) that particles sample the noise at harmonics of their revolution frequencies. The form of interaction (39) is directly applicable to the Palmer[31] method of momentum cooling, where the weighting function $G_\eta(x)$ derives from a transverse position sensitive pickup and the electronic gain is essentially constant over a Schottky band. For the filter method, in which energy information is obtained through variation of the electronic gain with frequency, the ϵ_ℓ factors are modified, with the corresponding $G_\eta(x)$ outside the integration in (41). If amplifier noise is included there will be an additional term on the right hand side:

$$\sum_\ell \frac{\partial}{\partial x}\left[\pi\left(\frac{e\omega}{2\pi}\right)^2 \frac{P(\ell\omega)}{|\epsilon_{-\ell}(\omega)|^2}\frac{\partial f_1}{\partial x}\right] \tag{51}$$

where P is the noise voltage power density. The amplifier noise acts like additional beam particles, but does not enter into the ϵ feedback factors. The condition $\epsilon_\ell = 0$ corresponds to the onset of coherent motion and is the analog of the dispersion relations for space charge and wall impedance instabilities. In this kinetic equation approach, these additional forces can be included in Eqs. (41) and (42) and will lead to modification of the ϵ_ℓ factors and cooling rates.

C. Schottky Signal Suppression

The ℓth Schottky signal at frequency $\ell\omega(x)$ is proportional to

$$f(x) + \mathrm{Re}\int_{\text{resolution}} dx'\, g_\ell(x,x') \tag{52}$$

where the integral is over the resolution of the analyzing device. Since the correlation function is highly peaked near $x = x'$, this integral is well approximated by

$$\mathrm{Re}\int dx'\, g_\ell(x,x') \approx \left(\frac{1}{|\epsilon_\ell|^2} - 1\right) f(x) \tag{53}$$

(see Eq. (49)). The resulting Schottky signal is modified to

$$\frac{f(x)}{|\epsilon_\ell|^2} \tag{54}$$

The factor $|\epsilon_\ell|^{-2}$ describes Schottky signal suppression and is a direct consequence of Eq. (42). This equation remains valid for space charge and wall effects (since it is independent of the cooling self-interaction term) with the appropriate impedance substituted for G. The solution of (39), or equivalently (44) will determine associated ϵ_ℓ which describe correlations due to the impedance.

5. FEEDBACK WITH SCHOTTKY BAND OVERLAP

From the analysis of the previous section, we have seen that the longitudinal cooling process is described by the Fokker-Planck equation (50). The single derivative term describes the self-interaction of particles which increases the phase space density. The second derivative term describes the effect of other beam particles and produces diffusion or heating. Also, note that it is the Schottky signal at harmonics of the "cooled" particle revolution frequency that enters into the equation. The ϵ-factors describe feedback through the beam and affect both the self-correction term and the Schottky noise term.

The form of the ϵ-factor is closely related to the dispersion integrals of coherent instabilities. The condition $\epsilon_\ell = 0$ is just the usual dispersion relation for longitudinal instability from a Vlasov equation analysis. In fact, the signal suppression was first derived by Sacherer[35] from a Vlasov equation with the Schottky random fluctuation as the initial value. In the model of Section 4 no Schottky band overlap was assumed. In addition, the discrete nature of the correction was lost in dropping rapidly oscillating terms. Here we will derive an expression for the signal suppression ϵ including these effects. The approach will be through a Vlasov equation.

Consider a longitudinal feedback system consisting of a pick-up at θ_p and a kicker downstream at θ_k. Let both the pick-up and kicker be short (i.e., approximated by δ-functions). Let $f(\theta,x,t)$ be the distribution function for longitudinal coherent motion. This distribution satisfies the linearized Vlasov equation

$$\frac{\partial f}{\partial t} + \omega \frac{\partial f}{\partial \theta} + \frac{F(\theta,t)}{\omega} \frac{\partial}{\partial x} (\omega f_0) = 0 \tag{55}$$

where F is the longitudinal kick of the feedback system and f_0 is the unperturbed energy distribution. The kick F is typically of the form

$$F(\theta,t) = -2\pi\delta(\theta-\theta_k)N \int dx'\omega' G(x',t-t')\, f(x',\theta_p,t) \tag{56}$$

Note the δ-function character of the kick and that only values of f at the pick-up location enter into the signal. G models the electrical character of the amplifier. A Fourier transform with respect to θ and a Laplace transform with respect to t yields

$$i\Omega\tilde{f}_\ell - i\ell\omega\tilde{f}_\ell + \frac{e^{i\ell\theta_k}}{\omega}\frac{\partial}{\partial x}(\omega f_o)N \cdot$$

$$\int dx'\omega'\tilde{G}(x',\Omega)\left(\sum_m e^{-im\theta_p} f_m(x')\right) + I_\ell(x,\Omega) = 0 \qquad (57)$$

where $I_\ell(x,\Omega)$ represents some initial perturbation. For cooling it is the random fluctuation of a single particle. We immediately have

$$f_\ell = \frac{-e^{i\ell\theta_k}N}{\omega(i\Omega - i\ell\omega)}\frac{\partial}{\partial x}(\omega f_o)\int dx'\omega'\,\tilde{G}(x',\Omega)\sum_m e^{-im\theta_p} f_m(x') + \hat{I}_\ell \qquad (58)$$

Multiplying by $e^{-i\ell\theta_p}\omega\, G(x,\Omega)$, summing over ℓ, and integrating over x yields

$$H(\theta_p,\Omega) = I(\theta_p,\Omega) - \left[\sum_\ell \frac{e^{i\ell(\theta_k-\theta_p)}N}{(i\Omega - i\ell\omega)}\frac{\partial}{\partial x}(\omega f_o)\,dx\right] H(\theta_p,\Omega) \qquad (59)$$

with

$$H(\theta_p,\Omega) = \int dx'\omega'\tilde{G}(x',\Omega)\sum_m e^{-im\theta_p} f_m(x') \qquad (60)$$

and finally

$$H(\theta_p,\Omega) = \frac{I(\theta_p,\Omega)}{\left(1 + \sum_\ell \int dx\, \frac{NG(x,\Omega)}{i\Omega - i\ell\omega}\frac{\partial}{\partial x}(\omega f)\, e^{i\ell(\theta_k-\theta_p)}\right)} \qquad (61)$$

The denominator is the generalization of the ϵ factor, and we write

$$\epsilon(\Omega) = 1 + \sum_\ell \int dx\, NG(x,\Omega)\frac{\partial}{\partial x}(\omega f)\frac{e^{i\ell(\theta_k-\theta_p)}}{i\Omega - i\ell\omega} \qquad (62)$$

The correspondence to our previous analysis is $\epsilon_m(\omega_0) \to \epsilon(m\omega_0)$. Now note that there are poles in this integral when $m\omega_0 = \ell\omega$. If there is Schottky band overlap, this condition is satisfied for some $\ell \neq m$. The sum over ℓ may be carried out by standard techniques[45] and yields

$$\sum_{\ell} \frac{e^{i\ell(\theta_k-\theta_p)}}{i\Omega - i\Omega\omega} = -\frac{2\pi}{\omega} \frac{\exp i(\theta_k-\theta_p)\frac{\Omega}{\omega}}{1 - \exp 2\pi i \left(\frac{\Omega}{\omega}\right)} \tag{63}$$

The final form of the signal suppression factor is[44,4]

$$\epsilon(\Omega) = 1 + \int dx\ NG(x,\Omega)\ \frac{2\pi}{\omega} \frac{\exp i(\theta_k-\theta_p)\frac{\Omega}{\omega}}{1 - \exp 2\pi i \frac{\Omega}{\omega}} \frac{\partial}{\partial x}(\omega f_0)$$

$$= 1 + \int dx\ NG(x,\Omega)\ \frac{\pi}{\omega}\left[1 + \mathrm{ictn}\ \pi\frac{\Omega}{\omega}\right]\left(\exp i(\theta_k-\theta_p)\frac{\Omega}{\omega}\right)\frac{\partial}{\partial x}(\omega f_0) \tag{64}$$

The Fokker-Planck equation (50) is modified by replacing the $\epsilon_\ell(\omega)$ factors by $\epsilon(\ell\omega)$. In addition, if there is band overlap, additional diffusion (second derivative) terms appear corresponding to values of x' satisfying $\ell\omega(x') = m\omega(x)$ for some ℓ and m. Physically, if there is band overlap, particles at different revolution frequencies produce signals that have the same frequency and these particles can interfere with each other's cooling.

The analysis of betatron cooling proceeds from a similar analysis with the complication of averaging over rapid betatron oscillations and slowly varying amplitudes. However, the basic notions of correlation, Schottky noise, and feedback remain (with associated ϵ-factors). The practical details will be discussed in subsequent sections.

6. BASIC SYSTEMS

A. Introduction

Pick-up electrodes (PU's), signal combiners, amplifiers, transmission lines, frequency filters, power splitters and kicker electrodes (K's) are the basic hardware components of a cooling system. We postpone discussion of most component properties to later sections and concentrate on the derivation of expressions for the gain functions $G_\ell(\omega)$, $G_{\ell\neq 0}(\omega)$ for longitudinal and transverse cooling systems, respectively, in terms of component transfer functions. For simplicity we will mostly concentrate on simple cooling systems acting on a fixed number of particles deferring discussion of the

more complex stochastic accumulation process, and most of the complications arising from coupling between different phase planes to later sections. We seek expressions of the form:

$$G = F_{PU} \cdot F_A \cdot F_K \, ef_o^2$$

where F_{PU}, F_A, F_K are transfer functions of PU, Amplifier (including filters and transmission lines) and K.

B. PU-Description.

We want to know the signal voltage spectrum generated by a single particle circulating in a ring. We will show later that the most general spectrum consists of frequencies $f_{q,r_x,r_z} = (q+r_xQ_x+r_zQ_z)f_o$, where q, r_x, r_z are integers, $-\infty < q, r_x, r_z < +\infty$, and Q_x, Q_z are the horizontal and vertical betatron tunes, respectively. For the cooling process only $f_{q,0,0}$, $f_{q,\pm1,0}$ and $f_{q,0,\pm1}$ are useful, and we restrict our discussion to these. PU response is most conveniently defined as an impedance. For a short PU there exists a well defined equilibrium position x_o, z_o (usually $z_o \equiv 0$) at the PU location and for a particle with betatron amplitudes x_β, z_β, revolution frequency f_o and arrival time t_{PU} (modulo T, $T=1/f_o$), the signal voltage is (to first order in x_β, z_β):

$$U_s(t) = U_{s,\parallel}(t) + U_{s,x}(t) + U_{s,z}(t) \tag{65a}$$

with

$$U_{s,\parallel}(t) = ef_o \sum_{q=-\infty}^{+\infty} Z_{PU}(x_o, q\omega)\, e^{iq\omega(t-t_{PU})} \tag{65b}$$

$$U_{s,x}(t) = ef_o \frac{x_\beta}{2} \sum_{q=-\infty}^{+\infty} \sum_{\pm Q_x} \frac{\partial}{\partial x} Z_{PU}(x_o, q\omega \pm Q_x\omega)\, e^{-iq\omega t_{PU}}\, e^{i(q\pm Q_x)\omega t} \tag{65c}$$

$$U_{s,z}(t) = ef_o \frac{z_\beta}{2} \sum_{q=-\infty}^{+\infty} \sum_{\pm Q_z} \frac{\partial}{\partial z} Z_{pu}(x_o, q\omega \pm Q_z\omega)\, e^{-iq\omega t_{PU}}\, e^{i(q\pm Q_z)\omega t} \tag{65d}$$

It is possible to build PU structures delivering signals (65b)-(65d) simultaneously but often specialization to only one of them is a more advantageous choice. In practice quite long PU's or arrays of many (hundreds) of PU's are used. Still, the long PU can be reduced to the form given above and for arrays of many PU's

the same holds. For ideal signal combiners we may write:

$$U_{total} = \sum_{n=1}^{N} U_n/\sqrt{N} \tag{66a}$$

If all U_n are equal; $U_n = U$

$$U_{total} = \sqrt{N}\, U \tag{66b}$$

The signal voltage as used in Eqs. (65) is the voltage of an outgoing wave in a properly terminated wave guiding structure, typically a 50Ω coaxial line feeding the preamplifier. As defined above the PU impedance relates particle current and signal voltage. Sometimes a power relation is desired in the form $P(\Omega) = (ef_0)^2\, Z_p(\Omega)$. $Z_p(\Omega)$ is easily obtained as $Z_p = |Z_{PU}(\Omega)|^2/Z_c$, where Z_c stands for the characteristic impedance of the coaxial line (= amp input impedance).

C. Amplifiers, Filters, Transmission Lines

The amplifier chain is unambiguously characterized by its complex gain $g_A(\Omega)$ (amplitude and phase) as a function of frequency. We include the transfer functions of filters and cables (with one exception) into the net electronic gain, including effects of impedance changes etc. If several K's are used the gain is defined from preamp input to a terminal plane at the entrance of the splitting network. It can be verified by the reader that the case of several power amplifiers driving different kickers can also be reduced to this description. Clearly the installed total amplifier gain is different in general from the net electronic gain used here. The only factor in the total electronic transfer function which we do not absorb in the net overall gain is the one associated with delays:

$$T(\Omega) = \exp\left(-i\,\frac{\Omega}{c}\,L\right) \tag{67}$$

where L represents the total electrical length of the system. The total electronic transfer function then is:

$$g_A(\Omega)\,\exp\left(-i\,\frac{\Omega}{c}\,L\right), \quad \text{i.e.} \tag{68a}$$

$$U_{K,in}(\Omega) = g_A(\Omega)\,\exp\left(-i\,\frac{\Omega}{c}\,L\right)\, U_{PU,out}(\Omega) \tag{68b}$$

For the previously introduced single particle signals:

$$U_{K,\parallel}(t) = ef_o \sum_q Z_{PU}(x_o, q\omega)\, g_A(q\omega) \exp i\left(q\omega t - iq\omega t_{PU} - iq\omega \frac{L}{c}\right) \quad (69a)$$

and

$$U_{K,\perp}(t) = ef_o \frac{A}{2} \sum_q \sum_{\pm Q} Z'_{PU}(x_o, q\omega \pm Q\omega)\, g_A\left((q \pm Q)\omega\right)$$

$$\exp(-iq\omega t_{PU}) \exp i\left((q \pm Q)\omega t - (q \pm Q)\omega \frac{L}{c}\right) \quad (69b)$$

with $A = x_\beta, z_\beta$; $' \equiv \frac{\partial}{\partial x}, \frac{\partial}{\partial z}$, respectively.

D. Kicker Transfer Function

We define this in terms of the voltage gain $\Delta U(\Omega)$ or transverse kick $\Delta x'(\Omega)$ experienced by a particle in a single pass through the structure driven by $U_K = U_o e^{i\Omega t}$.

$$\Delta U(\Omega) = \int_0^L e^{i\Omega \frac{s}{v}} E_s(\Omega)\, ds = U_o \int_0^L \frac{E_s(\Omega)}{U_o} e^{i\Omega \frac{s}{v}}\, ds = U_o\, K_\parallel(\Omega) \quad (70a)$$

and

$$\begin{Bmatrix} \Delta x' \\ \Delta z \end{Bmatrix} = \frac{\Delta p_{x,z}}{p} = \frac{1}{vp} \int_0^L e^{i\Omega \frac{s}{v}} (E_{x,z} \pm vB_{z,x})\, ds$$

$$= \frac{U_o}{\beta^2 E} \int_0^L e^{i\Omega \frac{s}{v}} \frac{E_{x,z} \pm vB_{z,x}}{U_o}\, ds = \frac{U_o}{\beta^2 E} K_{x,z}(\Omega) \quad (70b)$$

where $\beta^2 E$ is in [eV], a Cartesian coordinate system $\{x,z,s\}$ is used, $\vec{E}, \vec{B}$ are the fields generated by U_K and the particle trajectory is assumed parallel to the kicker axis. As in the case of PU's, refinements will be treated later, and similar remarks as in the PU case apply to long structures and/or arrays of kickers. In particular for N identical kickers:

$$K_{total} = \sum_{n=1}^{N} U_n / U_o \cdot K\ . \quad (71a)$$

For ideal power splitters $U_n = \text{const.} = U_o/\sqrt{N}$ and:

$$K_{total} = \sqrt{N}\, K \quad (71b)$$

We will see later that for any structure $K_\parallel, K_\perp$ are not independent but at present we will take them as separate quantities. Other ways to describe kicker efficiency are possible and in use. We may, e.g., relate the voltage gain to the driving current of the kicker, this leads to a kicker impedance Z_K, $\Delta U = Z_K I_K$ with $Z = K\, Z_C$, where Z_C is the characteristic impedance of the line feeding the kicker. Furthermore a kicker shunt impeadance Z_{Sh}, may be used relating ΔU and power, $(\Delta U)^2 = Z_{Sh}\, P$, with $Z_{Sh} = |K|^2 Z_C$.

E. Overall Gain

The single particle gain is now obtained. In the longitudinal case:

$$\dot{x} = ef_o^2 \sum_{q,p} Z_{PU}(x_o, q\omega)\, g_A(q\omega)\, K_\parallel(p\omega)\, e^{iq\omega\left(t - t_{PU} - \frac{L}{c}\right)}\, e^{ip\omega(t - t_K)} \tag{72}$$

obtained from the discrete (delta function like) action of the kicker. In the long time average:

$$p = -q, \qquad \text{yielding:}$$

$$\dot{x} = ef_o^2 \sum_q Z_{PU}(x_o, q\omega)\, K_\parallel(x_o, q\omega)\, g_A(q\omega)\, e^{iq\omega(t_K - t_{PU})}\, e^{-iq\omega \frac{L}{c}} \tag{73}$$

or with $\tau = t_K - t_{PU}$, $\tau_o = L/c$

$$\dot{x} = ef_o^2 \sum_q Z_{PU}(x_o, q\omega)\, K_\parallel(x_o, q\omega)\, g_A(q\omega)\, e^{iq\omega(\tau - \tau_o)} = \sum_q G_q(\omega) \tag{74}$$

In view of applying this expression in the evaluation of signal suppression factors we might carefully rewrite $G_q(\omega)$ as $G(\omega, \Omega)$ in the sense of the theoretical section of this paper:

$$G_q(\omega) = G(\omega, \Omega) = ef_o^2\, Z_{PU}\big(x_o(\omega), \Omega\big)\, K_\parallel\big(x_o(\omega), \Omega\big)\, g_A(\Omega)\, e^{i\Omega\left(\frac{\theta}{\omega} - \tau_o\right)} \tag{75a}$$

or

$$G_q(\omega) = ef_o^2\, Z_{PU}\big(x_o(\omega), q\omega\big)\, K_\parallel\big(x_o(\omega), q\omega\big)\, g_A(q\omega)\, e^{iq\theta - iq\omega\tau_o} \tag{75b}$$

where θ is the azimuthal separation (in radians) between PU and K.

The dimension of G is Vs^{-1}, if we express particle energies in eV.

For the transverse case we evaluate the rate of change of a single particle's emittance $\epsilon_\perp$, defined by $x = (\epsilon_\perp \beta_x)^{1/2} \cos(\psi)$, where β_x is the transverse betatron function, ψ the betatron phase and x is the particle transverse position.

For a single kick to first order in $\Delta x'$:

$$\Delta\epsilon_\perp = -2\epsilon_\perp^{1/2} \beta_K^{1/2} \sin\psi\Delta x' \tag{76}$$

Taking $x_{PU} = \epsilon_\perp^{1/2} \cdot \beta_{PU}^{1/2} \cos\psi$ and going through the same steps as for the longitudinal case:

$$\dot{\epsilon}_\perp = \epsilon_\perp \frac{(\beta_K\beta_{PU})^{1/2}}{2} \frac{ef_o^2}{\beta^2 E} \sum_{q,Q} (\mp i)\, Z'_{PU}\left(x_o,(q\pm Q)\omega\right) g_A\left((q\pm Q)\omega\right)$$

$$K_\perp\left(x_o,(q\pm Q)\omega\right) \cdot \exp iq\omega(\tau-\tau_o) \exp\left(\mp iQ\omega\tau_o\right) \tag{77}$$

or

$$G\left((q\pm Q)\omega\right) = (\mp i) \frac{(\beta_K\beta_{PU})^{1/2}}{2} \frac{ef_o^2}{\beta^2 E} Z'_{PU}\left(x_o,(q\pm Q)\omega\right) g_A\left((q\pm Q)\omega\right)$$

$$K_\perp\left(x_o,(q\pm Q)\omega\right) \exp iq\omega(\tau-\tau_o) \exp\left(\mp iQ\omega\tau_o\right) \tag{78}$$

The required betatron phase advance from PU to K, ψ_{PK} follows directly from this:

$$\text{set } \phi = \arg(Z\cdot g\cdot K), \quad \text{and} \quad \psi_{PK} = Q\omega\tau_o.$$

Then

$$\mathrm{Re}\left\{G\left((q\pm Q)\omega\right)\right\} \propto \pm \sin(\phi\mp\psi_{PK}) \tag{79}$$

The optimum solutions are:

$$\psi_{PK} = \frac{2n+1}{2}\pi, \quad n = 0,2,4 \quad \text{for } \phi = 0$$

$$\psi_{PK} = \frac{2n-1}{2}\pi, \quad n = 2,4, \quad \text{for } \phi = \pi$$

It is not possible to compensate a substantially "wrong" phase advance ψ_{PK} by adjusting the electrical phase of the system. It is left as an exercise to the reader to show that the proper

phase advance is a multiple of π if the transverse kicker is replaced by a longitudinal (uniform) kicker placed at a point in the lattice with $\alpha_p \neq 0$. Also note, by inspecting (77) and (78), that if $\psi \neq \left((2n\pm1)/2\right)\pi$, the phase of the gain at the $\pm Q$ sidebands is different. This is clearly visible experimentally in beam transfer function measurements.

Rewriting (78) again to emphasize the distinction between ω and Ω, with $\Omega_\pm = (q\pm Q)\omega$, and assuming ψ_{PK} to be an odd multiple of $\pi/2$:

$$G(\omega,\Omega_\pm) = -\frac{(\beta_K\beta_{PU})^{1/2}}{2}\frac{ef_o^2}{\beta^2 E} Z'_{PU}\left(x_o(\omega),\Omega_\pm\right)$$

$$\mathfrak{I}_A(\Omega_\pm)\ K_\perp\left(x_o(\omega),\Omega_\pm\right) e^{i\Omega_\pm\left(\frac{\theta}{\omega} - \tau_o\right)} \tag{80}$$

We proceed to apply these expressions to some simple design considerations, further simplifying the expressions in the process.

F. Transverse Cooling, Simplified Design Procedures

We consider a system with PU and K in "$\alpha_p = 0$ straight sections," where α_p is the horizontal dispersion function, to reduce maximally the energy dependence of the cooling process. (This is not always experimentally desirable but simplifies the example calculation.) Before entering into calculations we shall briefly and without proof establish the connection between the moment equation, which we will use here, and the more general framework involving the Fokker-Planck equation, previously derived for longitudinal cooling. The results follow after transforming from (q,p) space to the action-angle variables I,ψ and integrating over ψ. The relevant distribution is denoted by $F(\omega,I)$, where $\int_0^\infty F(\omega,I)dI = f(\omega)$, $\int f(\omega)d\omega = 1$. It can then be shown that for a linear gain, as introduced above, and non-overlapping Schottky bands the following equation holds:

$$\frac{\partial F}{\partial t} = -\frac{\partial}{\partial I}\left\{\sum_{q,Q}\left[\frac{G((q\pm Q)\omega)}{\epsilon_{-q\mp Q}(\omega)} IF + \frac{\pi N}{|q\pm Q|}\frac{|G((q\pm Q)\omega)|^2}{|\epsilon_{q\pm Q}(\omega)|^2}\int_0^\infty FI'dI'\left(I\frac{\partial F}{\partial I}\right)\right]\right\}$$

$$= -\frac{\partial}{\partial I}\left\{\sum_{q,Q}\left[\frac{G((q\pm Q)\omega)}{\epsilon_{-q\mp Q}(\omega)} IF(\omega,I)\right.\right.$$

$$\left.\left. + \frac{\pi N f(\omega)}{|q\pm Q|}\langle I_\omega\rangle\frac{|G((q\pm Q)\omega)|^2}{|\epsilon_{q\pm Q}(\omega)|^2} I\frac{\partial F(\omega,I)}{\partial I}\right]\right\} \tag{81}$$

The interesting difference between (81) and the corresponding equation for momentum cooling is that a particle with ω, I' experiences heating from all other particles with the same ω and any I: therefore the appearance of $\langle I \rangle$ in (81). Simplifying (81) we can write:

$$\frac{\partial F(\omega,I)}{\partial t} = -\frac{\partial}{\partial I}\left\{gIF(\omega,I) + D(\omega)\,\langle I_\omega\rangle\, I\,\frac{\partial F(\omega,I)}{\partial I}\right\} \tag{82}$$

From this the following equation for $\langle I_\omega\rangle$ is derived:

$$\frac{\partial\langle I_\omega\rangle}{\partial t} = g\langle I_\omega\rangle + D(\omega)\,\langle I_\omega\rangle \tag{83}$$

Obviously this equation holds also if we replace $\langle I\rangle$ by any quantity proportional to $\langle I\rangle$, such as $\epsilon_\perp$ (rms or full beam) or $\langle A^2\rangle$. If, in contrast to the assumptions leading to Eqs. (80) and (81), the rate of change of $\epsilon_\perp$ for a single particle is not linear in $\epsilon_\perp$, a more general gain function, $G(\omega,\epsilon)$ with dimensions $[ms^{-1}]$ must be introduced. A moment equation is then no longer very useful and a correspondingly modified form of Eq. (81) must remain the basis for calculation. For the present purposes however we assume $\dot{\epsilon}_\perp \propto g\epsilon_\perp$.

The cooling rate equation in the absence of noise is then:

$$S_\omega = \frac{1}{\langle A^2\rangle_\omega}\frac{d\langle A^2_\omega\rangle}{dt} = \frac{1}{\epsilon_{\perp,\omega}}\frac{d\epsilon_{\perp,\omega}}{dt}$$

$$= \sum_{q,Q}\left\{\frac{G\,(q\pm Q)\omega}{\epsilon_{-q\mp Q}(\omega)} + \frac{\pi N f(\omega)}{|q\pm Q|}\,\frac{|G((q\pm Q)\omega)|^2}{|\epsilon_{q\pm Q}(\omega)|^2}\right\}. \tag{84}$$

It can be shown that this can be rewritten as:

$$S_\omega = \sum_{q,Q}\frac{G((q\pm Q)\omega)}{|\epsilon_{q\pm Q}(\omega)|^2} \tag{85}$$

for the case where G can be pulled out of the dispersion integral used in the evaluation of $\epsilon_{q\pm Q}(\omega)$. With substantial pick-up - kicker delay this is not truly the case but for reasonable phase shifts across the distribution the error remains small.

We evaluate the cooling rate at the center frequency ω of a symmetric distribution where only the pole term enters into the evaluation of ϵ. The expression for $\epsilon_{q\pm Q}(\omega)$ is obtained from that for the longitudinal case by substituting $|q\pm Q|$ for $|q|$, and $f(x)$ for $\partial f/\partial x$ respectively.

We then obtain:

$$S_\omega = \sum_{q,Q} \frac{G\big((q\pm Q)\omega\big)}{\left|1 + \frac{\pi N f(\omega)}{|q \pm Q|} G\big((q\pm Q)\omega\big)\right|^2} \tag{86}$$

For simple gain models this expression can be evaluated in closed form. Let

$$G\big((q\pm Q)\omega\big) = G, \text{ real}, \quad n_1 < |q| < n_2$$

$$G\big((q\pm Q)\omega\big) = 0, \text{ otherwise}$$

and

$$n = q \cong q \pm Q$$

Then

$$s_\omega \xi \cong -4 \int_{n_1}^{n_2} dn \frac{G}{\left|1 + \frac{\pi N f(\omega)}{n} G\right|^2} = -n_T R(G\xi) \tag{87}$$

where

$$n_T = n_2 - n_1 = q_{max} - q_{min}$$

and

$$\xi = \frac{\pi N f(\omega)}{n_T}$$

where R stands for the somewhat lengthy but elementary expression for the integral (84). R is plotted in Fig. 2 for one and two octave bandwidth systems. The cooling rate is not very sensitive to the frequency dependence of G: if the plotted curves are used, e.g., for a system with $G_k = g_0 k$, i.e. linearly rising, only a few precent error occurs, provided $g_0(n_2+n_1)/2$ is substituted for G.

So far the effect of thermal noise has been neglected. The presence of an external (independent of particle amplitude) heating term modifies the equation for the evolution of the emittance:

$$\frac{d\varepsilon_\perp}{dt} = s\varepsilon_\perp + a \tag{88a}$$

with the solution

$$\varepsilon_\perp(t) = e^{s_\omega t}\Big(\varepsilon_\perp(0) - \varepsilon_\perp(\infty)\Big) + \varepsilon_\perp(\infty), \quad \text{with} \quad \varepsilon_\perp(\infty) = \frac{a}{s_\omega} \tag{88b}$$

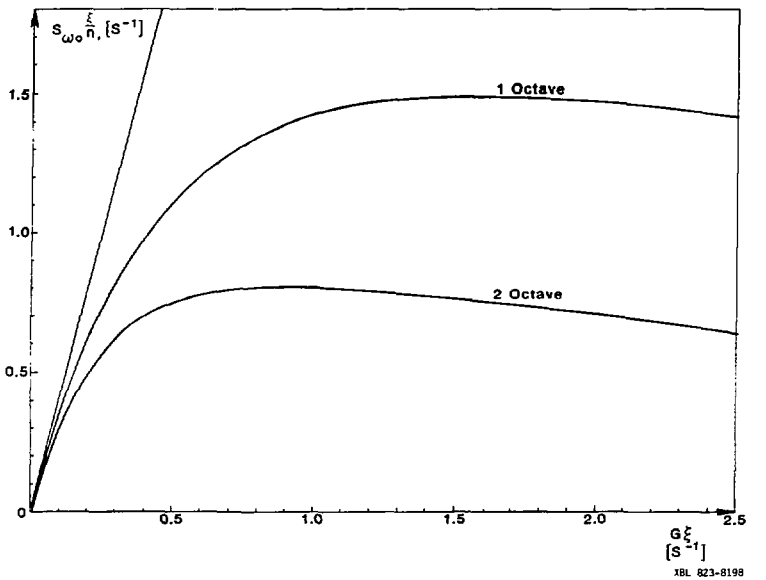

Fig. 2. Transverse cooling rate s_ω at center of symmetric distribution $f(\omega)$; $n = q_{max} - q_{min}$, $\xi = \frac{\pi N f(\omega)}{n}$, G = system gain [see Eq. (87)].

where a represents the thermal noise heating term. An expression for a, and therefore $\epsilon_\perp(\infty)$, may be obtained by explicitly writing the Schottky heating term in Eq. (84) and substituting the thermal power density at the preamp input for the Schottky power density. The result is:

$$\epsilon_\perp(\infty) = \frac{\beta_k f_o^2}{s_\omega} \frac{R_{in}}{(\beta^2 E)^2} \sum_{q,\pm Q} \frac{|K\ (q\pm Q)\omega|^2 \frac{dP}{df}\left(-(n\pm Q)f_o\right)}{|\epsilon_{q\pm Q}(\omega)|^2} |g_A|^2 \quad (89)$$

As written, Eq. (89), gives the asymptotic emittance for the full beam, i.e. $\sigma(\infty) = 1/2\ \sqrt{\beta\epsilon_\perp(\infty)}$. In many applications total power becomes an important issue and we need simple equations to estimate the total system power. Generally,

$$P = \int df\ |g_A|^2 \frac{dP_{in}}{df}(f)\ . \quad (90)$$

For an amplifier at temperature T_0 (typically $T_0 \sim 300°K$) whose input is properly back terminated with resistors at temperature T the thermal input power density is given by $dP/df = 1/2(T/T_0 + (10^{NF/10}-1))\ kT_0$, where NF is the amplifier noise figure in dB and k is Boltzmann's constant. For $T = T_0$ and NF = 3dB this reduces to the familiar approximate expression $dP/df \cong kT$.[11]

The Schottky input power density for transverse cooling is given by

$$dP/df \cong (ef_o\ Z'_{pu})^2 \langle A^2\rangle\ (dN/df_o)/(4\ R_{in}|q|)$$

$$= (ef_o\ Z'_{PU})^2\ \beta_{PU}\ \epsilon_\perp(dN/df_o)/(16\ R_{in}|q|)$$

where $\epsilon_\perp$ is the full beam emittance.

Note that the power densities as given are appropriate for our use of both positive and negative frequencies, otherwise they must be multiplied by 2. These equations allow a quick evaluation or preliminary design of transverse cooling systems. One possible way might follow these lines:

1) Determine an appropriate frequency range. This follows from N, n, $f(\omega)$, i.e. $\Delta p/p$, and the desired cooling rate [Fig. 2]. It is desirable to achieve the design rate with less than the optimum gain, since this results quickly in substantial power savings. Fractional bandwidths will typically be limited to one octave or less at frequencies in excess of 1 GHZ. Apart from practical

considerations the upper frequency limit may be determined by the phase error occurring due to the PU-K azimuthal separation. This phase error is given by $\Delta\psi = \pm 1/2\ \alpha\theta$, where θ is the PU-K separation, and αf_0 is the frequency width of the distribution at the top harmonic.

2) Determine g_A, and therefore, $\epsilon_\perp(\infty)$, P_N, P_{Sch} as a function of n_{PU}, n_K for a given type of PU's and K's. $\epsilon_\perp(\infty)$ should be $\lesssim 1/2$ the desired final emittance. Both $\epsilon_\perp(\infty)$ and P_N may be lowered by increasing n_{PU}. P_{Sch} and, again, P_N will decrease with increased n_K.

It is suggested as an exercise to consider the following case: $N = 10^8$, $\gamma = 9.5$, $m_p = .938$ GeV, $|\eta| = 0.005$, $f_0 = 6\cdot 10^5$ Hz, $\Delta p/p = \pm 1.5\ 10^{-3}$, $\epsilon_\perp(0) = 20\ \mu m$. Discuss the relative merits of systems working in the 1-2, 2-4 and 4-8 GHz range respectively. Determine n_{PU}, n_K, g_A, for a 2-4 GHz system which will reduce the initial emittance by a factor 4 in 2s. Keep the total power below 500 W. Assume
NF = 3 dB and refer to section 8E for electrode properties.

G. Longitudinal (Momentum) Cooling

The relevant equations are:

$$\frac{\partial\psi(x)}{\partial t} = -\frac{\partial\phi(x)}{\partial x} \tag{91}$$

$$\phi(x) = \psi(x)\sum_\ell \frac{G_\ell(x)}{\epsilon_{-\ell}(x)} - \psi(x)\frac{\partial\psi}{\partial x}\frac{1}{2}\frac{\beta^2\ddot{E}}{|\eta| f_0}\sum_\ell \frac{|G_\ell(x)|^2}{|\ell|\,|\epsilon_{-\ell}(x)|^2}$$

$$-\frac{\partial\psi}{\partial x}\sum_\ell \frac{|H_\ell(x)|^2}{|\epsilon_\ell(x)|^2} \tag{92}$$

$|H_\ell(x)|^2$ is given by:

$$|H_\ell(x)|^2 \doteq \frac{1}{2} R_{in} f_0^2 \frac{dP_N}{df}(\ell\omega)\,|g_A(\ell\omega)|^2\,|K_\ell(x)|^2 . \tag{93}$$

Using the previously given expressions for $G_\ell(x)$ Eq. (75a,b), these equations completely determine the evolution of the beam density function under the action of a given cooling system. In contrast to transverse cooling these equations are less amenable to reasonably accurate analytical approximations, and in general,

numerical evaluation is needed to determine $\psi(x,t)$. Nevertheless a number of approximate estimates are often possible.

i) A lower limit for the required gain may be obtained by keeping only the coherent term and equating it to the required rate of change of energy, i.e.

$$\left| \sum_{\ell} G_{\ell}(x) \right| \geqslant \left| \frac{dx}{dt} \right| \simeq \frac{x_{max}}{\tau_{cool}}$$

ii) an average instantaneous cooling rate for particles with $x_1 \leqslant x \leqslant x_2$ may be estimated:

$$\frac{\frac{\partial}{\partial t} \int_{x_1}^{x_2} \psi dx}{\int_{x_1}^{x_2} \psi dx} = \frac{[\phi(x_1) - \phi(x_2)]}{\int_{x_1}^{x_2} \psi dx} \tag{94}$$

whose evaluation of course requires that we postulate a certain $\psi(x)$ to exist at time t.

iii) Assuming a certain initial $\psi(x,t)$ we can, neglecting signal suppression and using a simple gain model, also derive an equation for the rate of change of the second moment $\langle x^2 \rangle$.

While all these approaches have a certain usefulness for initial estimates they must remain "crutches", the real answer will come from numerical evaluation tracking the evolution of $\psi(x,t)$.

Two essentially different methods to shape the gain function have been developed, the Thorndahl or filter method,[9] and the Palmer[31] method in various modifications. The filter method makes use of a Σ-PU and periodic frequency filters. Some more detailed comments on filters will be made in a later section. At present it suffices to state that electronic networks may be realized with transfer functions of the form:

$$T(\Omega) = 1 - Ae^{-i\Omega \frac{L}{c}} = 1 - Ae^{-i\Omega\tau_0} = 1 - Ae^{-i\Omega/f_0} \tag{95}$$

The quantities A and c are not in reality completely frequency independent over a wide band, and one of the outstanding problems of filter design is compensation for that dependence. Writing $\Omega = \ell\omega = 2\pi\ell f$

$$T(\ell\omega) = 1 - Ae^{-2\pi i \ell f/f_0} = 1 - A\cos 2\pi\ell f/f_0 + i\,A\sin 2\pi\ell f/f_0 \tag{96}$$

and

$$|T(\ell\omega)| = \left[1 + A^2 - 2A\cos 2\pi\ell f/f_0\right]^{1/2}, \tag{97}$$

$$\arg\left\{T(\ell\omega)\right\} = \operatorname{arctg}\frac{A\sin 2\pi\ell f/f_0}{1 - A\cos 2\pi\ell f/f_0}$$

This results in a transfer function periodic in f, with minimum transmission and a rapid phase jump ($-90°$ to $+90°$ for $A = 1$) whenever $\ell f = f_0$. By introducing an overall $\pi/2$ phase off-set in the electronics we obtain

$$\mathrm{Re}\left\{G_\ell\right\} \propto \sin\left(2\pi\ell f/f_0\right) = \sin\left(2\pi\ell\,\frac{xn}{\beta^2 E}\right) \tag{98}$$

In the Palmer method,[31] by contrast, a position sensitive PU is placed at a location with $\alpha_p \neq 0$, resulting in a signal voltage, and therefore overall gain, proportional to $Z_{PU}(\alpha_p x/\beta^2 E)$. In the simplest case a difference PU is used and $Z_{pu}(\alpha_p x/\beta E) \cong (\alpha_p x/\beta^2 E)Z'_{pu}$. Such a pick-up, of course, also detects horizontal betatron motion, a fact which, depending on band overlap, location and nature of kicker, can be used to achieve simultaneous betatron cooling, or may become a nuisance in that betatron signals from particles at one energy longitudinally heat particles at another energy. Both methods may be combined of course (although the role of filters will then be different from the one just outlined). Finally it may be pointed out that one might of course combine a sum PU with a K in a dispersed location and a transfer function $K_\parallel(x) = -K_\parallel(-x)$. Such a kicker will, however, always introduce transverse kicks and will not be pursued further here, since some of the associated problems in computing the appropriate signal suppression factors have not yet been solved to our satisfaction.

Apart from the differences in apparatus there are some more fundamental differences between the two methods, one having to do with thermal noise, the other with signal suppression. The filter method is more effective in reducing the effects of thermal noise, since the overall electronic gain, and therefore, the rms noise voltage seen by a particle is reduced proportional to $[1 + A^2 - 2A\cos 2\pi\ell f/f_0]$ tending towards $1 + A^2 - 2A$ as f approaches f_0, i.e., as the particles converge towards the desired equilibrium energy $x = 0$.

With regard to signal suppression we note that the following expressions apply:

a) Filter Method:

$$\epsilon_{\mp|\ell|}(x) = 1 + \frac{\pi N}{|\ell|}\frac{\beta^2 E}{|\eta|\omega} G_{\mp|\ell|}(\omega) \int_{\sigma\to 0_+} \frac{dx' \frac{\partial\psi}{\partial x'}}{\sigma \pm i(x-x')} \tag{99a}$$

b) Palmer Method:

$$\epsilon_{\mp|\ell|}(x) = 1 + \frac{\pi N}{|\ell|}\frac{\beta^2 E}{|\eta|\omega} \int_{\sigma\to 0_+} \frac{dx' \frac{\partial\psi}{\partial x'}}{\sigma \pm i(x-x')} G_{\mp|\ell|}(x') \tag{99b}$$

For illustration we use a simple, well behaved function, such as

$$\psi(x) = \frac{15}{16}\frac{1}{x_0}\left(1 - (x/x_0)^2\right)^2, \quad |x| \leq x_0 \tag{100}$$

$$\psi(x) = 0, \quad |x| > x_0$$

The evaluation will be made at a single harmonic with the following gain functions:

a) Filter: $$G = -g\sqrt{2}\left(\sin\frac{\pi}{4}\frac{x}{x_0} + i\left(\frac{1}{A} - \cos\frac{\pi}{4}\frac{x}{x_0}\right)\right)x_0 \tag{101b}$$

with $A = 0.9$, $g > 0$, real, $[g] = s^{-1}$

b) Palmer: $$G = -gx \tag{101b}$$

This choice corresponds to a distribution filling one fourth of a Schottky band at the selected harmonic ℓ, a filter with ~ -25 dB notch depth and the same single particle cooling rate at the edges of the distribution for the two cases.

With the distribution function (100) the PV-parts can be evaluated in closed form:

a) $$PV\int \alpha \left\{\frac{2}{3} - \left(1 - \left(\frac{x}{x_0}\right)^2\right)\left(2 + \left(\frac{x}{x_0}\right)\right) \ln\left|\frac{1-x/x_0}{1+x/x_0}\right|\right\} \tag{102a}$$

b) $$PV\int \alpha\left(\frac{x}{x_0}\right)\left\{\frac{1}{3}-\left(1-\left(\frac{x}{x_0}\right)^2\right)\left(2+\left(\frac{x}{x_0}\right)\right)\ln\left|\frac{1-x/x_0}{1+x/x_0}\right|\right\} \quad (102b)$$

The ϵ factor can then be rewritten as

$$\epsilon(x) = 1 + \frac{Ng}{\Delta f}(\alpha + i\beta) = 1 + \frac{4Ng}{f_0}(\alpha + i\beta) \quad (103)$$

where Δf is the full frequency spread of the distribution at the ℓth harmonic and where we recall that in the example we assumed one fourth of the Schottky band to be occupied. Figure 3 shows the quantity $(\alpha + i\beta)$ for both cases. It can be seen from the figure that not only signal suppression but also enhancement is possible, and that with sufficiently high gain, instability will occur. This is an immediate consequence of the substantial imaginary part of the gain with the filter method, which is particularly pronounced near the zero of Re{G}. In practice phase shifts will occur with any method and it should be remembered that we neglected to include the unavoidable phase error across the distribution due to different PU-K transit times of particles with different momenta.

H. Stochastic Stacking

The capability to increase the phase-space density of a circulating beam, or to maintain it in the presence of intrabeam and gas scattering, weak resonances or beam-beam effects, by means of stochastic cooling[43] is of great interest but the most important application to date is the stochastic accumulation of antiprotons. In machines such as the CERN-AA ring or the proposed FNAL accumulator a density increase of $\gtrsim 10^4$ in momentum space and 10 to 100 in each transverse phase plane are required.

We will only consider longitudinal cooling in this section. This presents the most demanding design task and requires the bulk of the cooling hardware. The process is schematically shown in Fig. 4 and is analyzed using the Fokker-Planck equation. A detailed study requires numerical solution, integrating with pulse by pulse injection. This proves to be time consuming, largely due to the need for frequent evaluation of the dispersion integrals needed for the ϵ-factor. Fortunately it is observed that over a substantial portion of the stack a nearly static situation with time independent ϕ, $\partial\psi/\partial x$ and ψ is established. This allows solution of the equation with boundary conditions on ψ and $\partial\psi/\partial x$, without a precise calculation of pulse injection. At various times through the accumulation of a stack a few single pulses might be calculated to verify that they are properly accumulated.

To gain a semi-quantitative insight we follow van der Meer,[41] observing that over most of the stack width we want an increase in ψ while maintaining a constant (energy and time independent) flux ϕ_0. (However, near injection and near the core this will not be

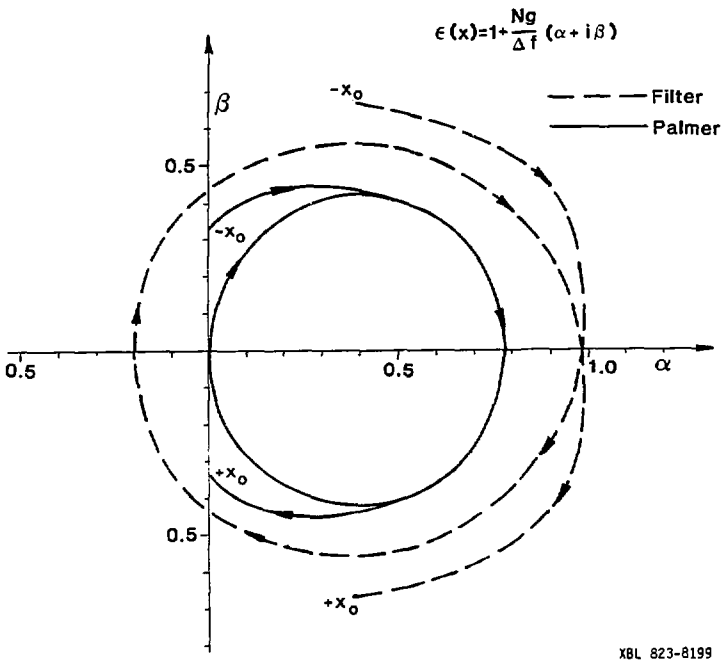

Fig. 3. Example for signal suppression factor $\varepsilon(x)$: see text, Eqs. (99) through (103) for system parameters.

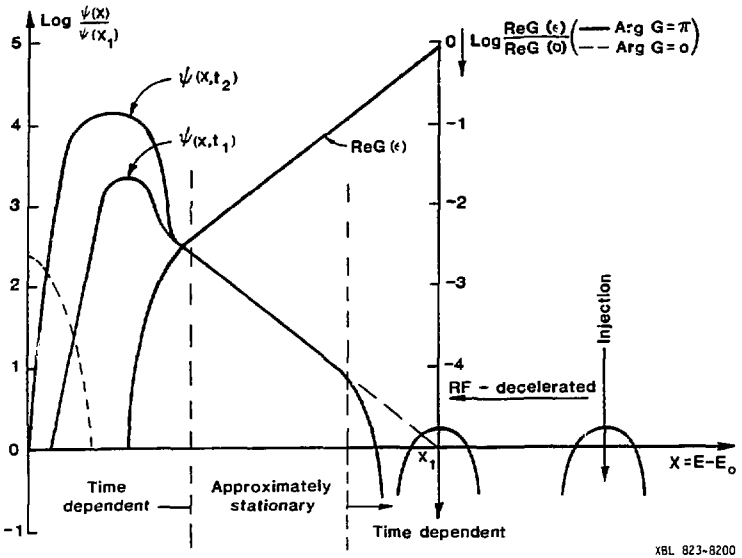

Fig. 4. Schematic description of stochastic stacking process: A pulse is injected on an injection orbit, then decelerated (or accelerated) to x_1 by an RF-system. From x_1 further acceleration and compression of longitudinal phase space density is achieved by a stochastic cooling system. Shown is the density function $\psi(x,t)$ at two different times t_1, t_2 and the system gain.

correct.) Neglecting signal suppression and thermal noise we obtain

$$\phi_0 = \psi(x) \sum_{\ell} G_{\ell}(x) - \frac{1}{2} \frac{\beta^2 E}{|\eta| f_0} \psi \frac{\partial \psi}{\partial x} \sum_{\ell} \frac{|G_{\ell}|^2}{|\ell|} \tag{104}$$

or

$$\frac{\partial \psi}{\partial x} = \frac{\psi(x) \sum_{\ell} G_{\ell}(x) - \phi_0}{\frac{1}{2} \frac{\beta^2 E}{|\eta| f_0} \psi \sum_{\ell} \frac{|G_{\ell}|^2}{|\ell|}} \tag{105}$$

Assuming $G_{\ell} = G_0$, a constant independent of ℓ over the working band, we obtain:

$$\frac{\partial \psi}{\partial x} = \frac{\psi(x)\ 2(\ell_{max} - \ell_{min})\ \rho(x)\ |G_0| - \phi_0}{\frac{\beta^2 E}{|\eta| f_0} \psi |G_0|^2\ \ell n(\ell_{max}/\ell_{min})} \tag{106}$$

where the factor $\rho(x)$ takes into account that $G_{\ell}(x)$ may not be purely real. Equation (106) cannot be solved analytically for arbitrary $G_0(x)$ but we can find a special choice of $G_0(x)$, yielding an "implicit" solution. Let

$$\rho(x)\ G_0(x) = \frac{\alpha(x)\ \phi_0}{\psi(x)\ 2(1-r)\ \ell_{max}} \tag{107}$$

where $r = \ell_{min}/\ell_{max}$. Then

$$\frac{\partial \psi}{\partial x} = \frac{\alpha(x) - 1}{\alpha^2(x)} \rho^2(x) \frac{4(1-r)^2}{\ell n\left(\frac{1}{r}\right)} \frac{\ell_{max}^2 |\eta| f_0}{\beta^2 E\ \phi_0} \psi = \lambda(x)\psi \tag{108}$$

with the obvious solution

$$\psi(x_2) = \psi(x_1) \exp \int_{x_1}^{x_2} \lambda(x')\, dx' \tag{109}$$

The steepest density increase is obtained with $\rho(x) = 1$ (real gain), $\alpha(x) = 2$ yielding

$$\lambda = E_D^{-1} = \frac{(1-r)^2}{\ln\left(\frac{1}{r}\right)} \frac{\ell_{max}^2 |\eta| f_o}{\beta^2 E\, \phi_o} \tag{110}$$

There will be some restrictions imposed on ℓ_{max}, η, and the stack width x_s, either from the use of frequency filters or the need to control PU-K mixing. It can be put in the form

$$\frac{\ell_{max}|\eta| f_o}{\beta^2 E} = \frac{k f_o}{x_s}$$

where k is some number dependent on the details of the system, typically $k < 1$. This leads to:

$$\frac{x_s}{E_D} = \frac{(1-r)^2}{\ln\left(\frac{1}{r}\right)} k \frac{f_{max}}{\phi_o} = \frac{(1-r)}{\ln\left(\frac{1}{r}\right)} k \frac{W}{\phi_o} \tag{111}$$

showing that the number of e-foldings depends on the ratio of system bandwidth to particle flux and the well known fact that a given bandwidth is more effective if centered at higher frequency (higher r). In practice several systems are used, with the highest frequency operating in the core where also a sign reversal not included above is introduced (this leads to a nonstationary configuration and some additional "peaking" at the core).

For gain shaping pick-up electrodes in straight sections with high dispersion α_D and filters are used. In principle kickers in sections with high dispersion could be used too, possibly eliminating the need for filters but their use, complicated by the transverse kicks they impart, has not been fully analyzed. The role of the filters is predominantly to protect the high density core from the thermal noise generated by the high power tail system. Stability must be carefully considered in splitting the gain roll-off between the electrodes and filters. High demands are also put on the lattice design: η is typically rather strictly defined, and long straight sections (~15 m in the FNAL design) with minimized β-functions in both planes and $\alpha_D = 10$ m are desired.

7. ELECTRONIC COMPONENTS

The essential components are signal combiners, transmission lines, amplifiers, power splitters and filters. All of these except the filters are usually commercially available.

Signal combiners may be of the "hybrid" type, i.e. 4 port junctions with the property that any port connects to only two of the other three and is isolated from the remaining one. They are used to create sum and difference signals from two incoming signals. They have the property that they always provide an impedance matched

input independent of the relative magnitude and phase of the incoming signals. The simple addition of equal signals, or arbitrary signals in a situation where reflections are not critical, may be achieved by leading N incoming lines of impedance Z together into a line of impedance Z/N. Tapers or multistep transformers are used to make the impedance of input and output lines equal, i.e. typically 50 Ω. The number of input lines need not be a binary number. All these devices come very close to "ideal performance;" they provide an output voltage $U_{out} = 1/\sqrt{N}\ \Sigma\, U_{n,in}$. Power splitters are essentially the same networks, the main practical difference is the particular power level.

Preamplifiers, and power amplifiers below 1 GHz, are usually solid state, with noise figures for preamps between 2.5 and 3 dB in the 1 to 2 and 2 to 4 GHz range, and lower ($\lesssim$ 2 dB) in the few hundred MHz range. Travelling wave tube amplifiers (TWTA) will be required in the GHz range for power levels exceeding a fraction of 1 W. Flat phase and gain characteristics are required, in particularly substantial phase deviations should not occur in the high gain region. This criterion is quite well satisfied by TWTA's, while many solid state power amplifiers often show a very sharp gain cutoff with substantial phase errors ($\sim 2\pi$) within the working band.

Periodic filters are usually "custom made". Most of the pioneering work in that area has been performed by L. Thorndahl et al. at CERN.[9] We will not discuss all the intrincacies involved here but merely illustrate the principles. Three basic configurations are common, as depicted in Figs. 5a. Consider first the configuration shown in Fig. 5a. Applying standard "S-matrix" formalism[11] to the junction shown yields:

$$S_{21} = \frac{2}{2 + \bar{y}_L} \qquad (112)$$

where $\bar{y}_L$ is the normalized admittance of the shorted, lossy line.

$$\bar{y}_L = \bar{y}\ \mathrm{ctgh}(i\beta L + \alpha L), \qquad (113)$$

where β, α are the (frequency dependent in real cables) propagation and loss constants of the line. Therefore

$$S_{21} = \frac{2(1 - e^{-2(i\beta L+\alpha L)})}{2 + \bar{y} - (2-\bar{y})\, e^{-2(i\beta L+\alpha L)}} \qquad (114)$$

or if we use, for simplicity, $\bar{y} = 2$

$$S_{21} = \frac{1}{2}\left(1 - e^{-2\alpha L} \cdot e^{-2i\beta L}\right) \qquad (115)$$

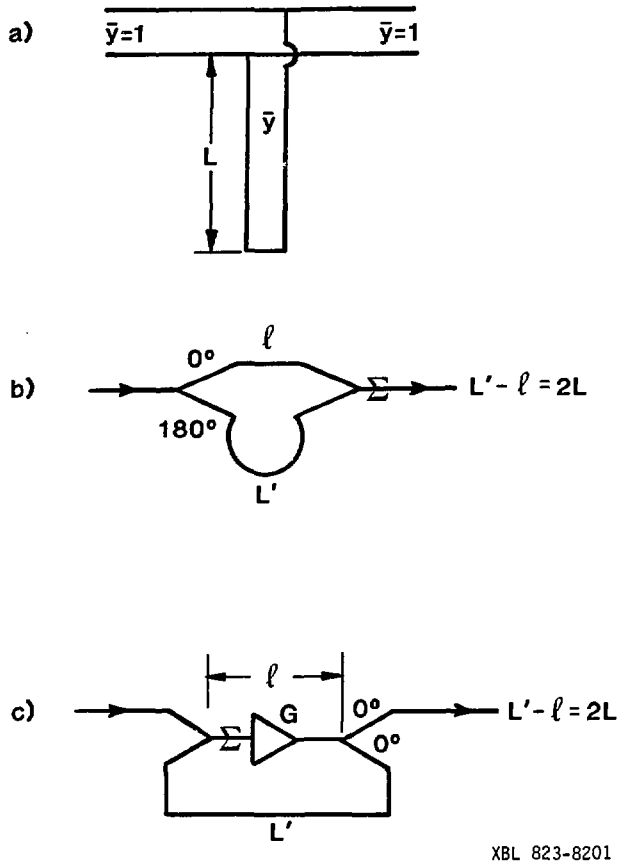

Fig. 5. Schematic filter configurations:

5a: shorted line, minimum transmission at $f_n = nc/2L$

5b: splitter-combiner network, minimum transmission at $f_n = nc/2L$

5c: "active" filter, maximum transmission at $f_n = nc/2L$ (ℓ,L,L' are "electrical lengths: at f_n)

which is of the same form previously used in the context of momentum cooling. Inspection of Eq. (114) shows that the ratio of maximum to minimum transmission for a given attenuation α increases as $\bar{y} \to \infty$. This is not possible in practice, also minimum α for a given outer diameter is reached at $Z \approx 77\,\Omega$. In practice, at frequencies of a few 100 MHz, series resistors are inserted in the input and output lines, which has essentially the same effect as increasing $\bar{y}$ in Eq. (114).

A simple analysis of the next configuration yields exactly the same result for the transfer function. Using an open line, or equivalently an adding instead of a subtracting network in the second case yields filters with the same characteristics but translated by $f_0/2$. These filters produce, within the limits of their cable losses, sharp minima. The third illustrated configuration generates a sharp maximum. Analyzing the network we obtain for the transmission:

$$T(\omega) = \frac{G}{1 - Ge^{-(i\beta+\alpha)L}} \,. \tag{116}$$

Care must be exercised to avoid instability in the choice of the gain G. Typical phase/amplitude characteristics are shown in Fig. 6. Common to all is a falling phase characteristic at maximum transmission which may be a problem if the filter is to be used at maximum transmission such as in stochastic stacking.

The most fundamental problems in filter construction are posed by cable losses and velocity dispersion. High uniformity, large diameters (controlled by the cut-off frequencies of modes other than the TEM-mode), and possibly cryogenic temperatures are required. In addition compensating networks may be used. In these schemes typically a signal proportional to the cable loss, generated by taking the difference signal between a high and a low loss line, is subtracted from the signal transmitted through the filter after suitable attenuation.

8. PICK-UP AND KICKER ELECTRODES, GENERAL SINGLE PARTICLE SCHOTTKY SPECTRUM

A. Introduction and Overview

We will discuss pick-up and kicker electrodes in greater depth and more detail than all other system components. Their performance affects important quantities such as signal to noise ratio, total amplifier power requirements, and amplitude and phase characteristics of the overall system gain. Unlike most components, they are not commercially available but must be tailored to the specific application needs. Furthermore, their requirements for space and specific locations in a cooling ring lattice interact strongly with the overall machine design. Reliable calculations and measurements often pose a nontrivial task.

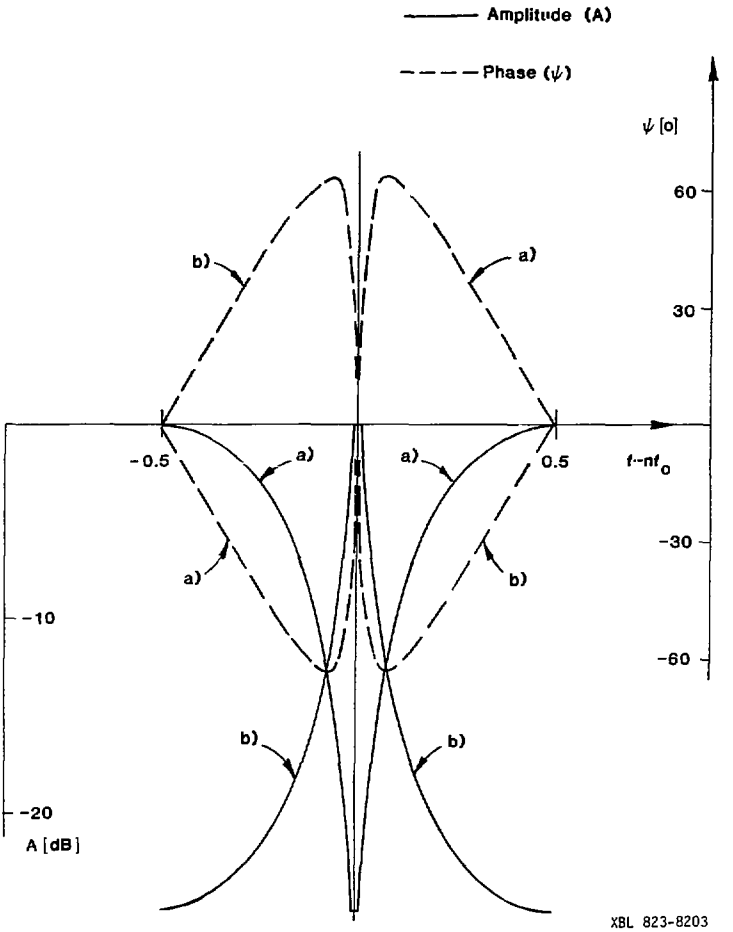

Fig. 6. Filter transfer functions, shown for $(n-1/2)f_0 \leqslant f \leqslant (n+1/2)f_0$; amplitude is normalized to maximum transmission.

a) type (a) with $\bar{y}_L$ or type (b)
b) type (c)

In all cases $e^{-2\alpha L} \cong 0.9$.

In this chapter we will proceed along the following lines of development:

First, we will describe general expressions for the PU-response. We will base this discussion on the Lorentz reciprocity theorem which, in our view, provides some conceptual simplifications and is related closely to the second objective, the discussion of kicker transfer functions. These discussions will provide us with general expressions for the pick-up and kicker transfer functions. We will use these then to obtain the signal spectrum of a single particle circulating in a ring. Finally we apply the results obtained to estimate the characteristics of some example structures.

B. PU-Characteristics, Reciprocity Theorem

Figure 7 schematically shows a pick-up (or kicker) structure: a discontinuity of some sort in the beam chamber connected to the "outside world" by one or more wave guiding structures, in practice transmission lines. Viewed as pick-up, we want to calculate the complex voltage amplitudes in the output port(s) generated by a particle travelling through the structure. The relevant equations are, of course

$$\nabla^2 \vec{A} - \frac{1}{c^2}\frac{\partial^2 \vec{A}}{\partial t^2} = -\mu_0 \vec{j} \quad \text{and} \quad \Delta^2 \phi - \frac{1}{c^2}\frac{\partial^2 \phi}{\partial t^2} = -\rho/\varepsilon_0 \qquad (117)$$

where $\vec{j}, \rho$ are the current and charge density corresponding to the particle. These, to be exact, must be complemented by the relativistic equations of motion, i.e.:

$$\frac{d\vec{p}}{dt} = e(\vec{E} + \vec{v} \times \vec{B}) \quad \text{and} \quad \frac{dE}{dt} = e(\vec{v} \cdot \vec{E}) \qquad (118)$$

where $\vec{E}, \vec{B}$ are the fields corresponding to $\vec{A}, \phi$ of Eq. (117). For PU response calculations we may, in contrast to stability calculations or electron beam tube evaluations, e.g., neglect (118), i.e, we need not take into account the effects on the particles trajectories by the fields generated by the particle. (This is borne out by the numerical results and, for stochastic cooling, is true in the case of kicker electrodes also.) Instead of solving Eq. (117) directly we use the Lorentz reciprocity theorem, which of course must lead to the same result since it is based solely on Maxwell's equations, but seems to provide some practical simplification and provides us with a unified view of PU and kicker response. To derive the theorem[1] we make use of Maxwell's curl equations for fields depending on time as $e^{i\Omega t}$, i.e

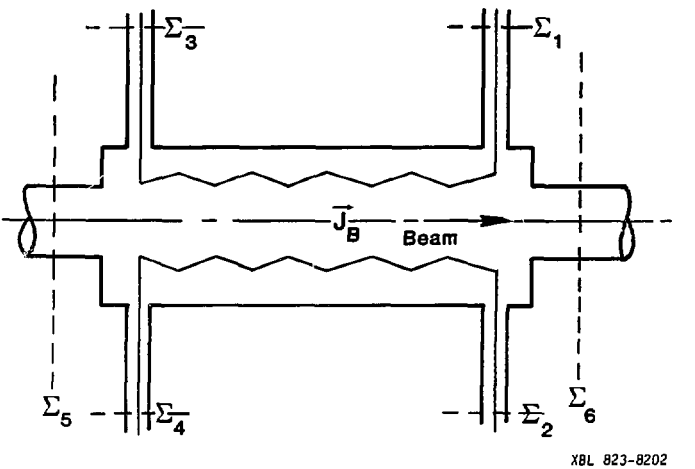

Fig. 7. Schematic representation of a PU or K; figure relevant to discussion of reciprocity theorem.

$$\text{curl}\ \vec{E} = -i\Omega\vec{B} \quad \text{and} \quad \text{curl}\ \vec{B} = \mu_0\left(\vec{J} + \text{curl}\ \vec{M} + i\Omega\vec{D}\right) \tag{119a}$$

and the vector identity:

$$\text{div}\left(\vec{E}_1 \times \vec{B}_2 - \vec{E}_2 \times \vec{B}_1\right) = \left(\text{curl}\ \vec{E}_1\right) \cdot \vec{B}_2 - \left(\text{curl}\ \vec{B}_2\right) \cdot \vec{E}_1 - \left(\text{curl}\ \vec{E}_2\right)\vec{B}_1 + \left(\text{curl}\ \vec{B}_1\right)\vec{E}_2 \tag{119b}$$

For isotropic and constant (independent of $\vec{B},\vec{E}$) μ and ϵ we combine (119a) and (119b) to obtain with $\vec{B} = \mu\vec{H}$, $\vec{D} = \epsilon\vec{E}$:

$$\text{div}\left(\vec{E}_1 \times \vec{H}_2 - \vec{E}_2 \times \vec{H}_1\right) = \vec{E}_2 \cdot \vec{J}_1 - \vec{E}_1 \cdot \vec{J}_2 \tag{120}$$

Note furthermore that if the current densities $\vec{J}_k$ are expressed $\vec{J}_k = \vec{J}_k^{(0)} + \sigma\vec{E}_k$, where $\sigma\vec{E}_k$ represent conduction currents in a resistive conductor Eq. (120) becomes:

$$\text{div}\left(\vec{E}_1 \times \vec{H}_2 - \vec{E}_2 \times \vec{H}_1\right) = \vec{E}_2 \cdot \vec{J}_1^{(0)} - \vec{E}_1 \cdot \vec{J}_2^{(0)} \tag{121}$$

Integrating over a volume V bounded by a surface Σ we obtain:

$$\oint_\Sigma d\vec{\Sigma}\left(\vec{E}_1 \times \vec{H}_2 - \vec{E}_2 \times \vec{H}_1\right) = \int_V dV\left(\vec{E}_2 \cdot \vec{J}_1^{(0)} - \vec{E}_1 \cdot \vec{J}_2^{(0)}\right) \tag{122}$$

where the surface integral vanishes if:

a) Σ is at infinity, or more generally includes all the sources $\vec{J}_1,\vec{J}_2$

b) Σ is a perfectly conducting surface

c) Σ is characterized by a surface impedance Z_m, $\vec{E}_{tang} = -Z_m\,\vec{n} \times \vec{H}$

For our application we make the following choices: $\{\vec{E}_1,\vec{H}_1,\vec{J}_1\} \equiv \{\vec{E}_B,\vec{H}_B,\vec{J}_B\}$ are the electromagnetic fields at frequency Ω generated by the particle represented by the current density $\vec{J}_B$. At the output ports this field must correspond to an outgoing

TEM wave if we select the location of the terminal planes Σ_1, Σ_2, Σ_{N-2} properly and operate at frequencies Ω below the cut-off for other modes, therefore:

$$\vec{E}_B(\Sigma_k) = V_B \text{ grad } \phi \quad \text{and} \quad \vec{H}_B(\Sigma_k) = \frac{V_B}{Z} (\vec{n} \times \text{grad } \phi) \tag{123}$$

where $Z = (1/\varepsilon')^{1/2} Z_0$, $Z_0 = 377\,\Omega$ and ϕ is the two-dimensional potential function appropriate for the particular transmission line geometry.

For the fields $\{\vec{E}_2, \vec{H}_2\} = \vec{E}_T, \vec{H}_T$ we select a TEM wave with an incoming voltage amplitude V_T in the kth guide. This creates the fields $\vec{E}_T, \vec{H}_T$ in the interior of V, its sources are obviously outside the volume V, $\vec{J}_T = 0$ therefore and at the terminal planes we have:

$$\vec{E}_T(\Sigma_k) = V_T(1 + S_{kk}) \text{ grad } \phi$$

$$\vec{H}_T(\Sigma_k) = -\frac{V_T}{Z} (1 - S_{kk}) (\vec{n} \times \text{grad } \phi) \tag{124a}$$

$$\vec{E}_T(\Sigma_n) = V_T S_{nk} \text{ grad } \phi \quad n \neq k,\ N-1,\ N-2$$

$$\vec{H}_T(\Sigma_n) = \frac{V_T}{Z} S_{nk} (\vec{n} \times \text{grad } \phi) \tag{124b}$$

where S_{nk} are the elements of the S-matrix of the considered N-port junction. To complete the description of our configuration we have to define E_T, H_T at Σ_{N-1} and Σ_N. We require $\{\vec{E}_T, \vec{H}_T\} \equiv \{\vec{0}, \vec{0}\}$ at these locations. This implies that the frequency is below cut-off of the beam pipe or that we insert attenuating materials and structures for any propagating modes. Performing the surface integral we then obtain immediately from b) or c) above that only Σ_ℓ, $\ell = 1,2,\ldots N$ can contribute. The contributions for Σ_{N-1}, Σ_N vanish with the requirements just made and on further inspection, it is seen that a non zero result is obtained only at those ports where both incoming and outgoing TEM waves are present, i.e. only at S_k. Therefore

$$\oint_{\Sigma}\left(\vec{E}_B \times \vec{H}_T - \vec{E}_T \times \vec{H}_B\right) d\vec{\Sigma} = \int_{\Sigma_k}\left(\vec{E}_B \times \vec{H}_T - \vec{E}_T \times \vec{H}_B\right) d\vec{\Sigma}$$

$$= -2\,\frac{V_T V_B}{Z}\int_{\Sigma_k} \text{grad}\,\phi \times (\vec{n} \times \text{grad}\,\phi)\, d\vec{\Sigma}$$

$$= -2\,\frac{V_T V_B}{Z}\int_{\Sigma_k} |\text{grad}\,\phi|^2\, d\Sigma \qquad (125)$$

$$= -2\,\frac{V_T V_B}{Z_C}$$

where Z_C is the characteristic impedance of the output line.

Comparing this finally with Eq. (122) we obtain the result

$$V_B = -\frac{Z_C}{2V_T}\int dV\, \vec{E}_T \cdot \vec{J}_B^{(0)} \qquad (126)$$

In words: the output voltage amplitude at a terminal plane Σ_k in the kth output port, generated by a current density $\vec{J}_B$ (at frequency Ω) in the interior of the structure, is obtained by performing the volume integral of Eq. (126)) where $\vec{E}_T$ is the field excited by an incoming wave with amplitude V_T at the terminal plane Σ_k. Once the current density $\vec{J}_B$ is known the only non-trivial task is to calculate the fields inside the structure for a given excitation. This task must be performed anyhow in order to establish the kicker properties and, as we shall see, the integral in Eq. (126) is closely related to the energy gain of a particle in a kicker of identical electrical properties.

We conclude this paragraph by calculating the signal voltage due to a single passage of a particle with velocity v and charge e. We make the usual paraxial ray approximation, assume the PU to be located in a drift space, and as mentioned above, neglect any effects on the particle trajectory due to the interaction with the PU, i.e.:

$$\frac{ds}{dt} = v\left(x'^2 + z'^2 + 1\right)^{-1/2} \cong v, \quad x' \equiv \frac{dx}{ds} = \text{const.} \quad z' \equiv \frac{dz}{ds} = \text{const.}$$

Then

$$\vec{j}(x,z,s,t) = e\vec{v}\ \delta\big(x-x(s)\big)\ \delta\big(z-z(s)\big)\ \delta(s-vt) \tag{127}$$

assuming $s(t=0) = 0$. By Fourier transform:

$$\vec{j} = e\vec{v}\ \delta\big(x-x(s)\big)\ \delta\big(z-z(s)\big)\ \frac{1}{\sqrt{2\pi}} \int_{-\infty}^{+\infty} dk\ e^{ik(s-vt)}$$

or for the quantity $\vec{J}(\Omega,x,z,s)$ which we need for use in Eq. (126):

$$\vec{J}(\Omega,x,z,s) = \frac{e\vec{v}}{v}\ \delta\big(x-x(s)\big)\ \delta\big(z-z(s)\big)\ e^{-i\frac{\Omega}{v}s} \tag{128}$$

Insertion in (126) finally yields:

$$V_B(\Omega) = -\frac{Z_c}{2}\frac{e}{v_T(\Omega)}\int ds$$

$$\left\{x'E_x\big(x(s),z(s),s\big) + z'E_z\big(x(s),z(s),s\big) + E_s\big(x(s),z(s),s\big)\right\} e^{-i\frac{\Omega}{v}s} \tag{129}$$

or equivalently:

$$V_B(\Omega) = -\frac{Z_c}{2}\frac{e}{V_1(\Omega)}\left\{x'\,\tilde{E}_x\left(\frac{\Omega}{v}\right) + z'\,\tilde{E}_x\left(\frac{\Omega}{v}\right) + \tilde{E}_s\left(\frac{\Omega}{v}\right)\right\}\sqrt{2\pi}\ ^{*)}$$

where the tilde indicates the Fourier transform with respect to the (longitudinal) spatial coordinate s.

C. Expressions for Kickers

The evaluation of the kicker transfer functions is relatively straightforward if we know the fields inside the structure. The starting point is provided by Eq. (118).

The energy change experienced by a particle in a single pass with harmonic excitation of the kicker ($\vec{E} \propto e^{i\Omega t}$) is easily evaluated.

---

*$[V_B(\Omega)] = V/Hz$ in Eq. (129). Later, for discrete spectra, we will use $[V_B(\Omega)] = V$. Equation (126) remains valid with either convention provided all quantities are treated consistently.

$$\Delta E = e \int_{s_1}^{s_2} ds \left\{ x' E_x\big(x(s),z(s),s\big) + z' E_z\big(x(s),z(s),s\big) + E_s\big(x(s),z(s),s\big) \right\} e^{i\Omega \frac{s}{v}} \tag{130}$$

where we made the substitution $s = vt$. Or in form of the Fourier transforms of the fields:

$$\Delta E = e \left\{ x' \tilde{E}_x\left(-\frac{\Omega}{v}\right) + z' \tilde{E}_z\left(-\frac{\Omega}{v}\right) + \tilde{E}_s\left(-\frac{\Omega}{v}\right) \right\} \sqrt{2\pi} \tag{131}$$

where the relation to the PU sensitivity expression (129) is evident.

We also need to know the transverse effects, $\Delta p_x, \Delta p_z$, from a transverse kicker for betatron cooling or in order to calculate the transverse kicks due to a longitudinal kicker. Expressions for $\Delta p_{x,z}(\Omega)$ may be described in analogy to the longitudinal case, evaluating $(\vec{E}+\vec{v}\times\vec{B})$ along the particle's trajectory. Instead of this explicit approach, we will derive an equation relating the transverse to the longitudinal kicks.

Assuming again an $e^{i\Omega t}$ time dependence of the fields we rewrite $d\vec{p}/dt$ by substituting i/Ω curl $\vec{E}$ for $\vec{B}$ in the expression for $d\vec{p}/dt$. We obtain:

$$\frac{dp_x}{dt} = e\left(E_x + \dot{y}\,\frac{i}{\Omega}\left(\frac{\partial E_z}{\partial x} - \frac{\partial E_x}{\partial z}\right) - \dot{z}\,\frac{i}{\Omega}\left(\frac{\partial E_x}{\partial z} - \frac{\partial E_s}{\partial x}\right)\right) \tag{132}$$

where dp_z/dt, dp_s/dt are obtained by cyclic permutation of the variables (x,z,s). With $dE_x/dt \equiv d/dt\ E_x\big((x(t),z(t),s(t),t\big)$ where x,z,s represent the particles trajectory through the kicker we arrive at:

$$\frac{dp_x}{dt} = e\,\frac{i}{\Omega}\left(-\frac{d}{dt}\,E_x + \vec{v}\,\frac{\partial}{\partial x}\,\vec{E}\right) \tag{133}$$

After substituting $s = vt$, we obtain:

$$\frac{dp_x}{ds} = e\,\frac{i}{\Omega}\left(x',z',1\right) \cdot \frac{\partial}{\partial x}\,\vec{E} - e\,\frac{i}{\Omega}\,\frac{1}{v}\,\frac{dE_x}{ds} \tag{134}$$

or

$$\Delta p_x = e\frac{i}{\Omega}\int_{s_1}^{s_2} ds\left\{x'\frac{\partial E_x}{\partial x} + z'\frac{\partial E_z}{\partial x} + \frac{\partial}{\partial x}E_s\right\} \tag{135}$$

since $E_x(s_1) = E_x(s_2) = 0$ by definition. This expression reveals the close relation between transverse kick strength and the transverse variation of the longitudinal kick strength. If the distances $x'L$, $z'L$, $L = s_2 - s_1$ are short compared to the scale of transverse changes of the fields in the structure we may simplify further:

$$\Delta p_x = \frac{i}{\Omega}\frac{\partial}{\partial x}\Delta E(x), \quad \Delta p_z = \frac{i}{\Omega}\frac{\partial}{\partial z}\Delta E(z) \tag{136}$$

Often the terms $x'E_x$, $z'E_z$ may be safely neglected compared with E_s. In that case we are left with a single expression to be evaluated:

$$\Delta E = e\int_{s_1}^{s_2} E_s(x,z,s)e^{i\frac{\Omega}{v}s}ds \tag{137}$$

from which all pick-up and kicker properties of a given structure may be derived.

Δp_s and ΔE are of course closely related and one may be obtained from the other without use of the equations described above. It is left as an exercise to the reader to show that application of Eqs. (135,137) yields the correct answer.

D. General Single Particle Spectrum

We derive the signal spectrum of a particle circulating with frequency $\omega/2\pi$, energy deviation x, $\Delta p/p = x/\beta^2 E$, and betatron amplitudes $x_\beta = \sqrt{\epsilon_x\beta_x}$, $z_\beta = \sqrt{\epsilon_z\beta_z}$.

The signal frequencies are determined by the current density which is the driving term, while the respective amplitudes must depend on the PU structure.

The current density is given by:

$$\vec{j}(x,z,s,t) = e\Big(x'(s,t),z'(s,t),1\Big)\ \delta\Big(x-x(s,t)\delta(z-z(s,t))\Big)$$

$$\sum_m \delta\left(t - \frac{s}{v} - mT\right) \tag{138}$$

where s is the distance along the trajectory within the PU, $-L/2 \leq s \leq L/2$, where L is the PU length. We Fourier transform the δ-functions to obtain:

$$\vec{j}(x,z,s,t) = e\left(x'(s,t)z'(s,t),1\right)\frac{1}{2\pi}$$

$$\iint_{-\infty}^{+\infty} dk_x\, dk_z\, e^{ik_x\left(x-x(s,t)\right)} e^{ik_z\left(z-z(s,t)\right)} f_0 \sum_q e^{iq\omega\left(t-\frac{s}{v}\right)} \quad (139)$$

In order to shorten the expressions we concentrate on j_s:

$$j_s = \frac{ef_0}{2\pi}\iint_{-\infty}^{+\infty} dk_x\, dk_z\, e^{ik_x\left(x-x(s,t)\right)} e^{ik_z\left(z-z(s,t)\right)} \sum_q e^{iq\omega\left(t-\frac{s}{v}\right)} \quad (140)$$

For $x(s,t)$ we write:

$$x(s,t) = x_p(s) + x_\beta(s)\cos\left(Q_x\omega t + \delta_x(s)\right), \quad (141a)$$

$$x_p(s) = \frac{\alpha_p(s)x}{\beta^2 E}, \quad (141b)$$

$$\delta_x(s) = \psi_x(s) - Q_x\,\omega\,\frac{s}{v} \quad (141c)$$

where $\alpha_p(s)$ is the dispersion function and where $\psi_x(s)$ is the betatron phase advance from the reference point $s = 0$ in the centre of the PU.

Similarly:

$$z(s,t) = z_\beta(s)\cos\left(Q_z\,\omega t + \delta_z(s)\right)$$

We make use of the expansion:

$$e^{ia\cos\theta} = \sum_r e^{ir\frac{\pi}{2}} e^{ir\theta} J_r(a) \quad (142)$$

where $J_r(a)$ is a Bessel function to obtain:

$$j_s(x,z,s,t) = \frac{ef_0}{2\pi} \sum_{q,r_x,r_z} e^{ir_x \frac{\pi}{2}} e^{ir_z \frac{\pi}{2}}$$

$$\iint_{-\infty}^{+\infty} dk_x\, dk_z\, e^{ik_x x} e^{ik_z z} e^{-iq\omega \frac{s}{v}} e^{-ik_x x_p(s)} e^{ir_x Q_x \omega t} e^{ir_x \delta_x(s)}$$

$$e^{ir_z Q_z \omega t} e^{ir_z \delta_z(s)} J_{r_x}\left(-k_x x_\beta(s)\right) J_{r_z}\left(-k_z z_\beta(s)\right) e^{iq\omega t} \qquad (143)$$

At any location s in the PU therefore:

$$j_s = \sum_{q,r_x,r_z} j_{q,r_x,r_z}(s)\, e^{i(q+r_x Q_x + r_z Q_z)\omega t} \qquad (144)$$

with

$$j_{q,r_x,r_z}(s) = \frac{ef_0}{2\pi} e^{i(r_x+r_z)\frac{\pi}{2} + ir_x\delta_x(s) + ir_z\delta_z(s) - iq\omega \frac{s}{v}}$$

$$\iint_{-\infty}^{+\infty} dk_x\, dk_z\, e^{ik_x x} e^{ik_z z} e^{-ik_x x_p(s)} J_{r_x}\left(-k_x x_\beta(s)\right) J_{r_z}\left(-k_z z_\beta(s)\right)$$

(145)

In general therefore a spectrum $\Omega_{q,r,s} = (q + {}_x r_x Q + {}_z r_z Q)\omega$ is possible, with $-\infty < q, r_x, r_z < +\infty$. It is easy to see that the com-components j_x, j_z will not introduce new frequencies since all they imply is essentially another multiplier $\exp(\pm iQ_x\omega t)$, $\exp(\pm iQ_z\omega t)$. How strong the different sideband signals are depends, of course, on the PU structure.

To demonstrate the principle we evaluate the $J_s \cdot E_s$ contribution to Eq. (126) only. With $\Omega = (q + r_x Q_x + r_z Q_z)\omega$:

$$V_B(\Omega) = -\frac{Z_c}{2V_T(\Omega)} \int dxdzds\, e^{i(r_x+r_z)\frac{\pi}{2}}\, e^{-i\frac{\Omega}{v}s}\, \frac{ef_o}{2\pi}$$

$$\iint dk_x\, dk_z\, e^{ik_x(x-x_p(s))}\, e^{ik_z z}\, e^{ir_x\psi_x(s)}\, e^{ir_z\psi_z(s)}\, J_{r_x}(-k_x x_\beta)$$

$$J_{r_z}(-k_z z_\beta)\, E_s(x,z,s) \qquad (146)$$

Upon introducing the two-dimensional Fourier transform of $E_s(x,z,s)$:

$$\tilde{\tilde{E}}_s(m,\ell,s) = \frac{1}{2\pi} \iint dxdz\, e^{imx}\, e^{i\ell z}\, E_s(x,z,s)$$

we obtain:

$$V_B(\Omega) = -\frac{Z_c}{2V_T(\Omega)} \frac{ef_o}{2\pi} \iiint dsdmd\ell\, e^{i(r_x+r_z)\frac{\pi}{2}}\, e^{-i\frac{\Omega}{v}s}\, e^{ir_x\psi_x}\, e^{ir_z\psi_z}$$

$$e^{imx_p(s)}\, J_{r_x}(mx_\beta)\, J_{r_z}(\ell z_\beta)\, \tilde{\tilde{E}}_s(m,\ell,s) \qquad (147)$$

Cumbersome as it appears, Eq. (146) represents one possible general formulation for the signal spectrum generated by a circulating particle in an arbitrary PU (or PU array). We examine a few of its aspects to establish the connection with previously introduced concepts.

i) For $x_\beta = z_\beta = 0$ all Bessel functions except J_0, $(J_0(0) = 1)$, vanish and therefore also all sidebands with $r_x, r_z \neq 0$. Recalling that we always assume the PU to be located in a drift space, we obtain:

$$V_B(q\omega) = -\frac{Z_c}{2V_T(q\omega)}\, ef_o \int_{-L/2}^{+L/2} ds\, e^{-i\frac{q\omega s}{v}}\, E_s\left(x_p(0)+x_p's, 0, s\right) \qquad (148a)$$

$$= ef_o\, Z_{pu}(x_o, q\omega) \qquad (148b)$$

in agreement with the PU-impedance introduced, somewhat arbitrarily, in Eq. (65b). The suppression of the argument x_p' in (148b) needs no further justification for a short PU; for a long PU or an array of many PU's it implies a statement about the lattice functions at the location of the electrode.

ii) For the betatron sidebands, $(q\pm Q_x)\omega$, $(q\pm Q_z)\omega$, the terms proportional to J_1 must be inspected. For sufficiently small arguments mx_β, ℓz_β, we write:

$$V_B(q\omega\pm Q_x\omega) = -\frac{Z_c}{2V_T((q\pm Q_x)\omega)}\, ef_o\, \frac{(\pm i)}{2} \int_{-L/2}^{+L/2} ds\, e^{-i(q\pm Q_x)\frac{\omega}{v}s}\, e^{i\psi_x(s)}\, x_\beta(s)\, \frac{\partial}{\partial x} E_s\big(x_p(s),0,s\big) \tag{149a}$$

and

$$V_B(q\omega\pm Q_z\omega) = -\frac{Z_c}{2V_T((q\pm Q_z)\omega)}\, ef_o\, \frac{(\pm i)}{2} \int_{-L/2}^{+L/2} ds\, e^{-i(q\pm Q_z)\frac{\omega}{v}s}\, e^{i\psi_z(s)}\, z_\beta(s)\, \frac{\partial}{\partial z} E_s\big(x_p(s),0,s\big) \tag{149b}$$

Again the expressions reduce immediately to Eqs. (65b,c) for a short PU, and provide the basis for the correct extension of Eqs. (65b,c) to a long PU structure.

iii) For a short PU we can write approximately

$$V_B(\Omega) \cong ef_o\, Z_{pu}(x_p,\Omega) \tag{150}$$

for any frequency Ω and obtain a simplified version of (147) in the form

$$V_B(\Omega) = \frac{ef_o}{2\pi} \iint dm\, d\ell\, e^{i(r_x+r_z)\frac{\pi}{2}}\, J_{r_x}(mx_\beta)\, J_{r_z}(\ell z_\beta)\, e^{ikx_p}\, \tilde{Z}_{pu}(m,\ell,\Omega) \tag{151}$$

It should be pointed out that there are configurations where these expressions are of more than academic interest. In stochastic accumulation, e.g., variation of Z_{pu} with x_p is essential to shape the longitudinal system gain. With finite x_β, z_β not only higher order sidebands appear but also the response at $\Omega = q\omega$ is modified and becomes dependent on betatron amplitudes. Lattice functions must be chosen to minimize this effect. Their magnitude is strikingly evident in Figs. 8 and 9, calculated from Eq. (151).

It is left as an exercise for the reader to verify that the same frequencies $\Omega = (q+r_x Q_x + r_z Q_z)\omega$ exert an influence in a long time average on a particle traversing a kicker of arbitrary field configuration.

E. A Few Specific Electrode Models

We will now apply these rather theoretical arguments to the approximate evaluation of some practical structures. As our first example we select the simple device depicted in Fig. 10, which is sometimes referred to as a wall current monitor and which might typically serve as a Σ-PU, i.e., a device with minimized spatial (transverse) variation of response which simply detects the passage of a particle.

Let us first consider the voltage gain of a particle travelling parallel to the axis at radius r. From Eq. (131)

$$\Delta U = \sqrt{2\pi}\,\tilde{E}\left(r, -\frac{\Omega}{v}\right) \tag{152}$$

The field must satisfy the vector Helmholtz equation: $\nabla^2\vec{E} + k_0^2\vec{E} = 0$. In cylindrical coordinates the longitudinal component is:

$$\frac{1}{r}\frac{\partial}{\partial r}\left(r\frac{\partial E_s}{\partial r}\right) + \left(k_0^2 - k^2\right)E_s = 0 \tag{153}$$

and with $k^2 = \Omega^2/v^2$, $k_0^2 = \Omega^2/c^2$:

$$\frac{1}{r}\frac{\partial}{\partial r}\left(r\frac{\partial E_s}{\partial r}\right) - \frac{k_0^2}{\beta^2\gamma^2}E_s = 0 \tag{154}$$

The solution is $I_0(k_0 r/\beta\gamma)$, where I_0 is the modified Bessel function. Therefore:

$$\Delta U(r_1)/\Delta U(r_2) = I_0\left(\frac{k_0 r_1}{\beta\gamma}\right)/I_0\left(\frac{k_0 r_2}{\beta\gamma}\right) \tag{155}$$

In particular:

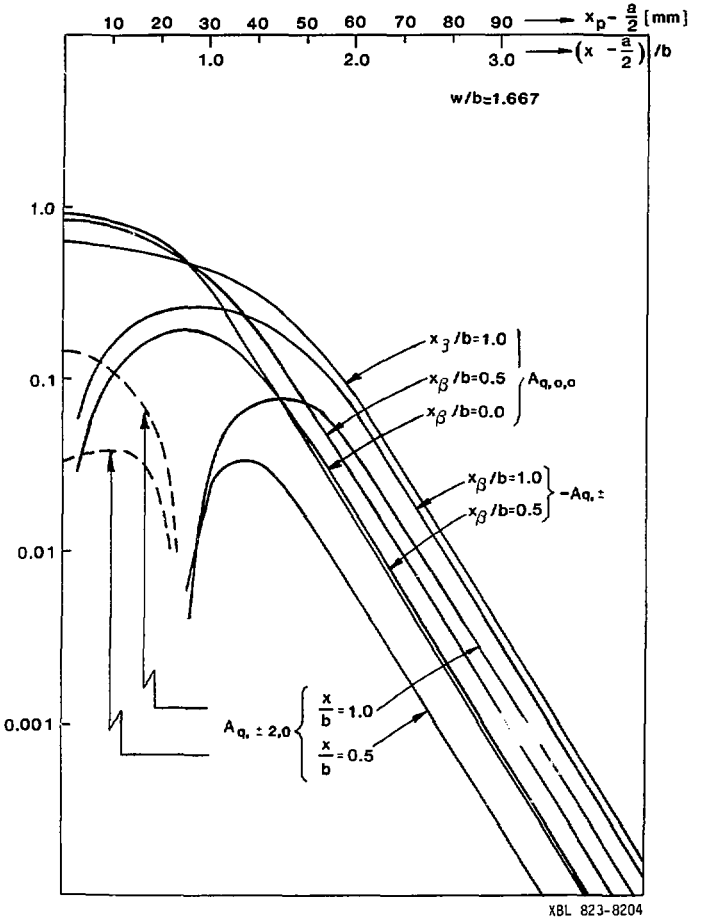

Fig. 8. Relative signal amplitudes $A_{q,r_x,o}$ at frequencies $(q \pm r_x Q_x)\omega$ vs. equilibrium position x_p for common mode operation of the PU structure shown in Fig. 11. Shown are the nominal response $A_{q,o,o}$ and the sidebands $r_x = \pm 1, \pm 2$ for $z_\beta = 0$, $x_\beta \cong 0, 0.5b$ and b.

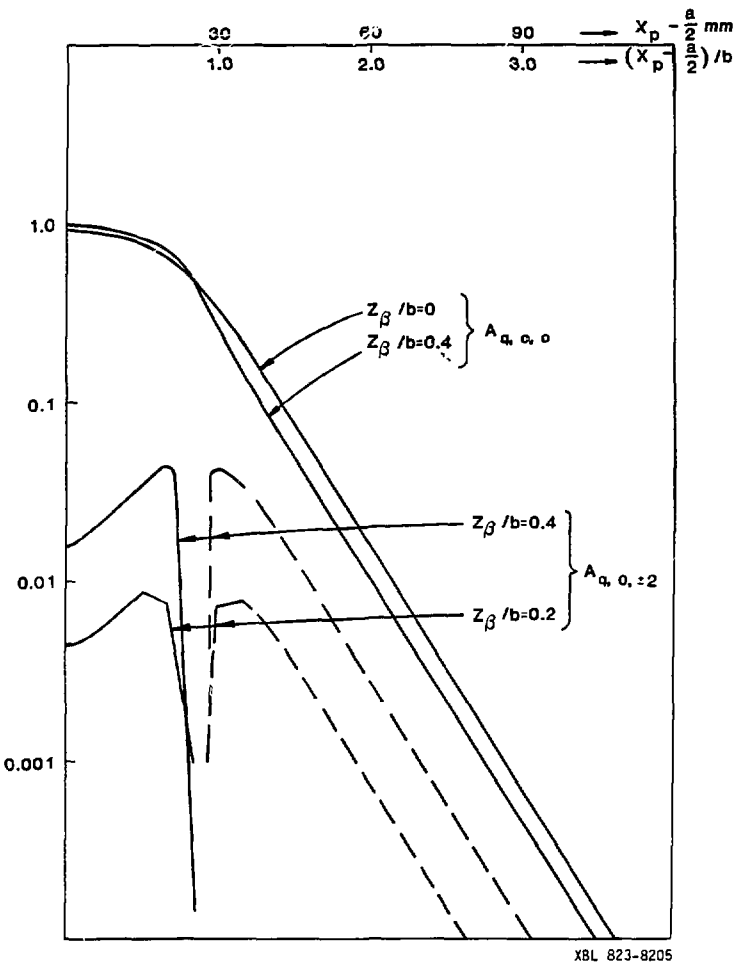

Fig. 9. Relative signal amplitudes A_{q,o,r_z} for same PU as Fig. 8. $x_\beta = 0$, $z_\beta = 0, 0.2b, 0.4b$. Note disappearance of $r_z = \pm 1$ sidebands in common mode operation of PU.

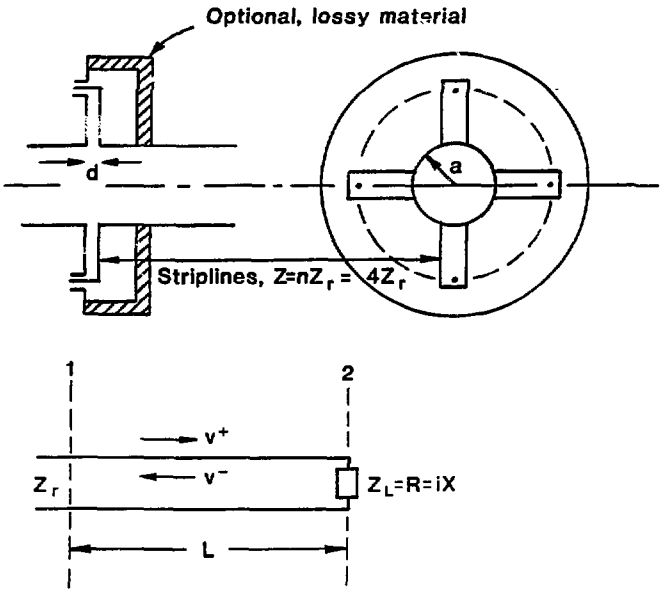

$$V_{gap} = V^{+}(2)\left(1 + S_{11}(2)\right) = V_1(1)\left(e^{-i\beta L} + e^{i\beta L} S_{11}(1)\right), \quad S_{11}(2) = \frac{Z_L - Z}{Z_L + Z}$$

XBL 823-8206

Fig. 10. Schematic description of "wall current monitor," Σ-PU.

$$\Delta U(0) = \Delta U(a)/I_0\left(\frac{k_0 a}{\beta\gamma}\right) \tag{156}$$

To calculate $\Delta U(a)$ exactly we must know $E_s(a,s)$. An approximate result is obtained by noting that $\Delta U(a) \equiv U$, the voltage across the gap, provided $\Omega << \beta c/d$. Then

$$\Delta U(0) = U_{gap}/I_0\left(\frac{k_0 a}{\beta\gamma}\right) \tag{157}$$

We observe that the frequency response of the device is limited a) by the gap length d, and b) the appearance of the Bessel function $I_0(k_0 a/\beta\gamma)$. The physical origin of the latter becomes evident if we look at the device as a PU which, by virtue of Eqs. (129) and (131), must exhibit the same behavior: it is just the expression, appropriate for the boundary conditions of this configuration, of the fact that the fields of a particle passing an observer at a distance a from the trajectory fall off rapidly for frequencies in excess of $\Omega = v\gamma/a$.

In this derivation it is implicitly assumed that we are below cut-off for any propagating waveguide modes (at least TM modes with $E_z \neq 0$). Above cut-off we could still follow this analysis but obviously the electric fields at the wall (r=a) would then not only be given by those across the gap but also those along attenuating surfaces necessary to damp out these modes.

The second part of the problem at hand is the calculation of the gap voltage in terms of some externally applied voltage. This calculation can rarely be performed exactly for a pick-up or kicker electrode. We use a simplified model also in this case. With regard to Fig. 10 we consider the effect of the entire configuration as a load impedance concentrated at the ends of the transmission (strip) lines.

To this impedance there corresponds a reflection coefficient S_{11}. The voltage across the gap is then $(e^{-i\beta L} + e^{i\beta L}S_{11})V_0$, where V_0, S_{11} refer to the reference terminal plane location and L is the electrical length from the reference plane to the gap. S_{11} is an experimentally measurable quantity and we obtain:

$$\Delta U = \left(e^{-i\beta L} + e^{i\beta L}S_{11}\right)V_0/I_0\left(\frac{k_0 a}{\beta\gamma}\right) \tag{158}$$

and

$$Z_{pu} = \frac{-Z_c}{2}\left(e^{-i\beta L} + e^{i\beta L}S_{11}\right)/I_0\left(\frac{k_0 a}{\beta\gamma}\right) \tag{159}$$

for a particle trajectory on and parallel to the cylinder axis. The weakness of the model is the assumption that the reflection is completely due to a localized impedance at the end of the strip lines.

Again, however, a measurement of the phase of S_{11} can help to determine how good this assumption is.

Another pick-up or kicker device of practical importance is the loop coupler shown in Fig. 11. Driven in common mode it provides a Σ-PU or longitudinal kicker, in push-pull we obtain a vertical Δ-PU or vertical transverse kicker. As derived previously all quantities of interest will follow from $\int(x'E_x+z'E_z+E_s)\exp(i\Omega s/v)ds$. The most important contribution to the integral comes from E_s, even in the push-pull configuration and we drop therefore the terms $x'E_x, z'E_z$ for our approximate analysis.

For a particle with $x = a/2$, $z = b$, $x' = z' = 0$ we obtain

$$\Delta U(a/2,b) = \sqrt{2}\ i \left(\frac{Z_L}{Z_R}\right)^{1/2} U \sin\left[\left(k_o + \frac{\Omega}{v}\right)\frac{\ell}{2}\right] \tag{160}$$

where U is the voltage applied at the input to the splitting network. In deriving (160) it was assumed that the signal propagates through the loop as a TEM-wave (with propagation constant k_o) without reflections and that the longitudinal field may be represented as a δ-function at the two gaps. In general we expect:

$$\Delta U_c(x,z) = \sqrt{2}\ i \left(\frac{Z_L}{Z_R}\right)^{1/2} U\ \alpha_c(x,z,\Omega) \sin\left[\left(k_o + \frac{\Omega}{v}\right)\frac{\ell}{2}\right] \tag{161a}$$

and

$$\Delta U_{pp}(x,z) = \sqrt{2}\ i \left(\frac{Z_L}{Z_R}\right)^{1/2} U\ \alpha_{pp}(x,z,\Omega) \sin\left[\left(k_o + \frac{\Omega}{v}\right)\frac{\ell}{2}\right] \tag{161b}$$

where the subscripts c,pp refer to common mode and push-pull excitation, respectively. Equations (161) are completely general and can be applied to an analysis of nonlinearities and higher order sidebands in the sense of section 8D. The simpler expressions for "nominal" PU impedances and kicker transfer functions follow:

$$\kappa_{\parallel}(x,\Omega) = \sqrt{2}\ i(Z_L/Z_R)^{1/2}\ \alpha_c(x,o,\Omega) \sin\left[\left(k_o + \frac{\Omega}{v}\right)\frac{\ell}{2}\right] \tag{162a}$$

$$Z_{pu,\parallel}(x,\Omega) = \frac{i}{\sqrt{2}}(Z_L Z_R)^{1/2}\ \alpha_c(x,o,\Omega) \sin\left[\left(k_o + \frac{\Omega}{v}\right)\frac{\ell}{2}\right] \tag{162b}$$

$$K_x(x,\Omega) = -\sqrt{2}\frac{c}{\Omega\beta^2 E}(Z_L/Z_R)^{1/2}\frac{\partial}{\partial x}\alpha_c(x,o,\Omega) \sin\left[\left(k_o + \frac{\Omega}{v}\right)\frac{\ell}{2}\right] \tag{163a}$$

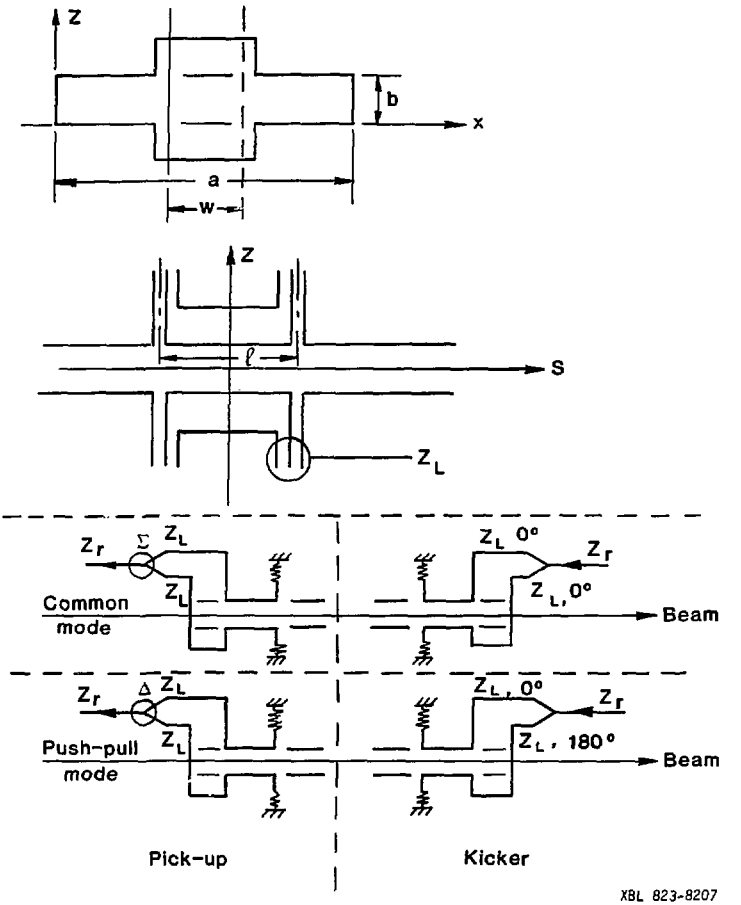

Fig. 11. "Loop coupler" type PU or K. Shown are the geometric configuration (top) and the electrical configuration for PU and K operation in either common or push-pull mode.

$$K_z(x,\Omega) = -\sqrt{2}\,\frac{c}{\Omega B^2 E}\,(Z_L/Z_R)^{1/2}\,\frac{\partial}{\partial z}\,\alpha_{pp}(x,0,\Omega)\,\sin\left[\left(k_o + \frac{\Omega}{v}\right)\frac{\ell}{2}\right] \tag{163b}$$

$$\frac{\partial Z}{\partial x}(x,\Omega) = \frac{i}{\sqrt{2}}\,(Z_L Z_R)^{1/2}\,\frac{\partial}{\partial x}\,\alpha_c(x,o,\Omega)\,\sin\left[\left(k_o + \frac{\Omega}{v}\right)\frac{\ell}{2}\right] \tag{164a}$$

$$\frac{\partial Z}{\partial z}(x,\Omega) = \frac{i}{\sqrt{2}}\,(Z_L Z_R)^{1/2}\,\frac{\partial}{\partial z}\,\alpha_{pp}(x,o,\Omega)\,\sin\left[\left(k_o + \frac{\Omega}{v}\right)\frac{\ell}{2}\right] \tag{164b}$$

For the evaluation of $\alpha(x,z,\Omega)$ we make use of standard equations for the excitation of the eigenmodes of the rectangular wave guide by fields on coupling apertures. Since we restrict our attention to E_s we need only concern ourselves with the TM modes which we write as follows:[37]

$$\vec{E} = a_{m,p}(s,t)\ \mathrm{grad}\ \phi_{m,p} + c_{m,p}(s,t)\ \phi_{m,p}\cdot\vec{u}_s \tag{165}$$

$$\vec{H} = \alpha_{m,p}(s,t)\ \vec{u}_s \times \mathrm{grad}\ \phi_{m,p}$$

with

$$\phi_{m,p}(x,z) = \sin\frac{m\pi x}{a}\,\sin\frac{p\pi z}{b}$$

where the coefficients $\alpha_{m,p}$, $a_{m,p}$, $c_{m,p}$ satisfy the following equations if the driving terms arise from fields on coupling holes:[37]

$$\frac{d^2\alpha_{m,p}}{dz^2} + \left(k_o^2 - k_{m,p}^2\right)\alpha_{m,p} = i\,\frac{k_o}{Z_o}\,I_s(s),$$

$$a_{m,p} = i\,\frac{Z_o}{k_o}\,\frac{d\alpha_{m,p}}{dz},$$

$$c_{m,p} = i\,\frac{Z_o}{k_o}\,k_{mp}^2\,\alpha_{o\,m,p} \tag{166}$$

where

$$k_{mp}^2 = \left(\frac{m\pi}{a}\right)^2 + \left(\frac{p\pi}{b}\right)^2$$

and

$$I_s(s) = \frac{1}{N_{mp}^2} \frac{p\pi}{b} \int_0^a dx \left\{ e_s(x,o,s) + (-1)^{p-1} e_s(x,b,s) \right\} \sin \frac{m\pi x}{a} \quad (167)$$

where e_s is the longitudinal component of the electric field on the coupling aperture and $N_{mp}^2 = k_{mp}^2 \, ab/4$.

Analogous expressions could be derived for the TE modes, including both e_s and e_x, if we were to take the $x'E_x$, $z'E_z$ terms into account as well. The solution of (166) is immediately obtained for the Fourier transform $\tilde{c}_{m,p}(\Gamma)$ of $c_{m,p}(s)$:

$$\tilde{c}_{m,p}(\Gamma) = \frac{k_{m,p}^2}{\Gamma^2 + k_{m,p}^2 - k_o^2} \tilde{I}_s(\Gamma) \quad (168)$$

The expression for the longitudinal field is:

$$\tilde{E}_s(\Gamma) = \sum_{m,p} \tilde{c}_{m,p}(\Gamma) \, \phi_{m,p}(x,z) = \sum_{m,p} \tilde{c}_{m,p}(\Gamma) \sin \frac{m\pi x}{a} \sin \frac{p\pi z}{b} \quad (169)$$

With

$$\Gamma = -\frac{\Omega}{v}, \qquad K_m^2 = \frac{k_o^2}{(\beta\gamma)^2} + \left(\frac{m\pi}{a}\right)^2 \quad (170)$$

the voltage gain follows as:

$$\Delta U(x,z) = \sqrt{2\pi} \sum_{m,p} \frac{1}{a} \frac{4\pi p}{b^2} \sin \frac{m\pi x}{a} \sin \frac{p\pi z}{b} \left(K_m^2 + \left(\frac{p\pi}{b}\right)^2 \right)^{-1}$$

$$\int_0^a dx' \sin \frac{m\pi x'}{a} \left\{ \tilde{e}_x\left(x',o,-\frac{\Omega}{v}\right) + (-1)^{p-1} \tilde{e}_s\left(x',b,-\frac{\Omega}{v}\right) \right\} \quad (171)$$

From (171) we see that symmetric (common mode) excitation leads to odd p only while anti-symmetric (push-pull) excitation yields even p only. The sum (169) over the index p is not uniformly convergent since the expansion includes functions which all go to 0 at the boundary while (169) must reproduce the non-zero tangential field on the coupling apertures. Therefore we seek a closed form solution for the summation over p. The Fourier series for the

functions $f(z) = -\cosh(K(z + b/2))$, $-b < z \leq 0$, $f(z) = \cosh(K(x - b/2))$, $0 \leq z \leq +b$, and $f(z) = \sinh(K(z + b/2))$, $-b \leq z < 0$, $f(z) = \sinh(K(z-b/2))$, $0 < z \leq b$, provide us with the solutions:

$$\Delta U_c(x,z) = \sqrt{2\pi}\sum_m \frac{2}{a}\,\frac{\cosh(K_m(z-b/2))}{\cosh(K_m b/2)}\,\sin\frac{m\pi x}{a}$$

$$\int_0^a dx'\,\sin\frac{m\pi x'}{a}\,\tilde{e}_s\left(x',b,-\frac{\Omega}{v}\right) \tag{172a}$$

$$\Delta U_{pp}(x,z) = \sqrt{2\pi}\sum_m \frac{2}{a}\,\frac{\sinh(K_m(z-b/2))}{\sinh(K_m b/2)}\,\sin\frac{m\pi x}{a}$$

$$\int_0^a dx'\,\sin\frac{m\pi x'}{a}\,\tilde{e}_s\left(x',b,-\frac{\Omega}{v}\right) \tag{172b}$$

As can be seen this solution has the required properties

$$\Delta U_c(x,b) = \Delta U_c(x,o) = \sqrt{2\pi}\,\tilde{e}_s\left(x',b,-\frac{\Omega}{v}\right)$$

and

$$\Delta U_{pp}(x,b) = -\Delta U_{pp}(x,o) = \sqrt{2\pi}\,\tilde{e}_s\left(x',b,-\frac{\Omega}{v}\right).$$

We notice furthermore that the γ-dependence required for a true 3-dimensional and relativistic solution is contained in the quantity K_m (Eq. (170)).

Convergence of the sum over m is quite good, except for $z \to b$, $z \to 0$. Connection with Eqs. (161) is established by setting

$$\tilde{e}_s\left(x',b,-\frac{\Omega}{v}\right) = (2\pi)^{-1/2} i g(x')\,\sin\left(k_o + \frac{\Omega}{v}\right)\frac{\ell}{z}$$

leading to

$$\alpha_c(x,z,\Omega) = \sum_m \frac{2}{a}\,\sin\frac{m\pi x}{a}\,\frac{\cosh(K_m(z-b/2))}{\cosh(K_m b/2)}\int_0^a g(x')\,\sin\frac{m\pi x'}{a}\,dx' \tag{173a}$$

$$\alpha_{pp}(x,z,\Omega) = \sum_m \frac{2}{a} \sin \frac{m\pi x}{a} \frac{\sinh(K_m(z-b/2))}{\sinh(K_m b/2)} \int_0^a g(x') \sin \frac{m\pi x'}{a} dx' \tag{173b}$$

Curves for α, for a given simple model of $g(x)$, are shown in Fig. 12.

It should be pointed out that this is *an exact "solution"* in terms of the assumed fields on the coupling apertures. We have, however, strictly speaking, no a priori knowledge about these fields, they constitute part of the problem. A complete solution would require a simultaneous, self-consistent solution of the field problem both inside the beam chamber and the strip lines of the loop which is a formidable task for this particular geometry.

It is seen that the performance of a single wideband electrode is limited to $Z_{PU} \lesssim 50\,\Omega$, $K \lesssim 2$. Applications such as fast cooling (precooling) or tail cooling in stochastic stacking require approximately one order of magnitude higher values. By summing the outputs from N individual electrodes $Z_{PU} \cong \sqrt{N}\, Z_{PU,1}$ $K \cong \sqrt{N}\, K_1$ is obtained, i.e. the impedance of the array increases with $\sqrt{L}$, where L is its length.

Several attempts have been made to design and build travelling wave electrodes, based on helices or periodically loaded transmission lines. The voltage gain in such a structure is

$$\Delta U \cong E_s(\Omega) L \cdot \frac{\sin x}{x}, \quad x = \left[\frac{\Omega}{v} - \Gamma(\Omega)\right] \frac{L}{2}$$

where $\Gamma(\Omega)$ is the propagation constant of the structure. The design problem is to match the phase velocity $(v_{ph} = \Omega/\Gamma(\Omega))$ to the particle velocity v over a sufficiently wide frequency range and to maximize E for a given total power flow. The advantages seem obvious: a voltage gain $\propto L$, rather than $\sqrt{L}$, and no need for extensive signal combining (or power splitting) networks. The drawback is that (at least for broadband operation and structures based on loaded transmission lines and helices) the ratio of E_s/V_{in} seems to decrease approximately as $1/\gamma^2$, eventually overcoming the advantages. The first such electrode used for stochastic cooling is the "slot-box" designed by L. Faltin[16], successfully operated at the ISR and the CERN AA-ring. Also, very high impedances were obtained with the helical and ladder line electrodes built by LBL for use at the FNAL 200 MeV cooling ring.[22,23]

Finally, it should be observed that in special applications where narrow band operation is possible (slow cooling of a small number of particles) very high impedances are achieved by using PU's based on resonant cavities.[10]

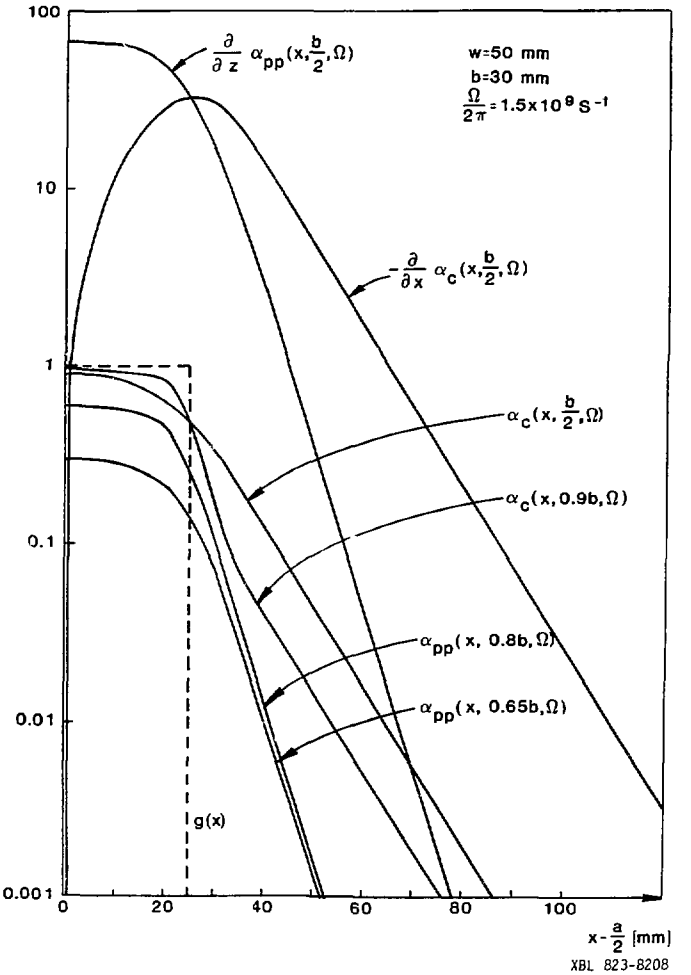

Fig. 12. $\alpha_c(x,z,\Omega)$, $\alpha_{pp}(x,z,\Omega)$ and their derivatives vs. x (see text) for PU of Fig. 11.

BIBLIOGRAPHY

1. J. Bisognano, Transverse Stochastic Cooling, BECON-9, (LBL) (1979).
2. J. Bisognano, Vertical Transverse Stochastic Cooling, BECON-10, LBID-119, (1979).
3. J. Bisognano, Kinetic Equations for Longitudinal Stochastic Cooling, XIth Int. Conf. on High Energy Accelerators, CERN, Geneva, (LBL-10753) (1980).
4. J. Bisognano, On Signal Suppression with Overlapping Schottky Bands and Large Gain Instability of Feedback Systems for Stochastic Cooling (1981).
5. J. Bisognano and S. Chattopadhyay, Bunched Beam Stochastic Cooling, BECON-18, (1981).
6. J. Bisognano and S. Chattopadhyay, Stochastic Cooling of Bunched Beams, 1981 Particle Accelerator Conference, Washington D.C., 2462 (1981).
7. M. Borer et al., Non-destructive Diagnostics of Coasting Beams with Schottky Noise, IXth Int. Conf. on High Energy Accelerators, SLAC (1974).
8. D. Boussard, Effects of RF Noise, Workshop on $\bar{p}p$ in the SPS, March 1980, SPS-pp-I, CERN, 87 (1980).
9. G. Carron and L. Thorndahl, Stochastic Cooling of Momentum Spread by Filter Techniques, CERN-ISR-RF/78-12, (1978).
10. G. Carron et al., Experiments on Stochastic Cooling in ICE, IEEE Transactions in Nucl. Sci., NS-26 3, 3456 (1979).
11. R. E. Collin, Foundations for Microwave Engineering, McGraw-Hill (1964).
12. E. N. Dement'ev et al., Measurement of the Thermal Noise of a Proton Beam in the NAP-M Storage Ring, Sov. Phys. Tech. Phys. 25(8), 1001 (1980).
13. Ya S. Derbenev and S. A. Kheifhets, On Stochastic Cooling, Particle Accelerators, Vol. 9, 237 (1979).
14. Ya S. Derbenev and S. A. Kheifhets, Damping of Incoherent Motion by Dissipative Elements in a Storage Ring, Soviet Phys. Tech. Phys. 24(2), 209 (1979).
15. Ya S. Derbenev and S. A. Kheifhets, Stochastic Cooling, Sov. Phys. Tech. Phys. 24(2), 209 (1979).
16. L. Faltin, Slot-type Pick-up and Kicker for Stochastic Beam Cooling, Nucl. Inst. Methods, 148, 449 (1978).
17. T. Hardek et al., ANL Stochastic Cooling Experiments Using the FNAL 200-MeV Cooling Ring, 1981 PAC, Washington D.C., 2455 (1981).
18. H. G. Hereward, The Elementary Theory of Landau Damping, CERN 65 (1965).
19. H. G. Hereward, Statistical Phenomena-Theory, in: Proc. Int. School of Particle Accelerators, Erice 1976, CERN 77-13, 284 (1977).
20. H. Herr and D. Mohl, Bunched Beam Stochastic Cooling, CERN-EP-NOTE/79-34, (1979).

21. S. Ichimaru, Basic Principles of Plasma Physics. W. A. Benjamin (1973).
22. G. Lambertson et al., Stochastic Cooling of 200 MeV Protons, Proceedings of the XIth International Conf. on High Energy Accelerators, CERN, Geneva, (1980).
23. G. Lambertson et al., Experiments on Stochastic Cooling of 200 MeV Protons, 1981 PAC, Washington D.C., 2471 (1981).
24. R. Liboff, Introduction to the Theory of Kinetic Equations. John Wiley and Sons, (1969).
25. L. Jackson Laslett, Evolution of the Amplitude Distribution Function for a Beam Subjected to Stochastic Cooling, LBL-6459, (1977).
26. T. Linnecar and W. Scandale, A Transverse Schottky Noise Detector for Bunched Proton Beams, 1981 Particle Accelerator Conference, Washington D.C. (1981).
27. F. Mills, High Energy Beam Cooling, Workshop on $\bar{p}p$ in the SPS, March 1980, SPS-pp-I, CERN, 157 (1980).
28. F. Mills, Fermilab Summer School (1981).
29. F. Mills and F. Cole, Review Article in Annals of Nucl. Sci., Annual Review of Nuclear and Particle Science, 31, 295, (1981).
30. D. Mohl et al., Physics and Techniques of Stochastic Cooling, Physics Reports 58, 2, 73 (1980).
31. R. B. Palmer (unpublished).
32. V. V. Parkhomchuk and D. V. Pestrikov, Thermal Noise in an Intense Beam in a Storage Ring, Sov. Phys. Tech. Phys. 25(7), 818 (1980).
33. A. G. Ruggiero, Are We Beating Liouville's Theorem, Proceedings of the Workshop on Producing High Luminosity High Energy Proton-Antiproton Collisions, Berkeley, CA, 123 (1978).
34. A. G. Ruggiero, Stochastic Cooling with Noise and Good Mixing, Proceedings of the Workshop on Producing High Luminosity High Energy Proton-Antiproton Collisions, Berkeley, CA, 150 (1978).
35. F. Sacherer, Stochastic Cooling Theory, CERN-ISR-TH/78-11, (1978).
36. W. Schnell, About the Feasibility of Stochastic Damping in the ISR, CERN/ISR/RF/72-46 (1972).
37. J. Van Bladel, Electromagnetic Fields, McGraw-Hill (1964).
38. S. Van der Meer, Stochastic Damping of Betatron Oscillations in the ISR, CERN/ISR-PO/72-31, (1972).
39. S. Van der Meer, Influence of Bad Mixing on Stochastic Acceleration, CERN/ SPS/DI/PP/Int. NOTE/77-8, (1977).
40. S. Van der Meer, Stochastic Cooling Theory and Devices, Proceedings of the Workshop on Producing High Luminosity High Energy Proton-Antiproton Collisions, Berkeley, CA, 73, (1978).
41. S. Van der Meer, Stochastic Stacking in the Antiproton Accumulator, CERN/PS/AA/78-2, (1978).
42. S. Van der Meer, Precooling for the Antiproton Accumulator, CERN/PS/AA/78-26 (1978).
43. S. Van der Meer, Debunched $\bar{p}$-p operation of the SPS, CERN/PS/AA/9-42, (1979).
44. S. Van der Meer, A Different Formulation of Longitudinal and Transverse Beam Response, CERN/PS/AA/80-4 (1980).

45. J. M. Wang and C. Pellegrini, Proceedings of the 1979 Workshop on Beam Current Limitations on Storage Rings, BNL-51236 (1979).
46. Klimontovich Yu, Statistical Theory of Non-equilibrium Processes in a Plasma. MIT Press (1967).

APPENDIX A

Comments on the Fokker-Planck Equation

The solution of Eq. (47) is a nontrivial task requiring a computer. The basic equation is nonlinear through the $f \cdot \partial f/\partial x$ term, the gain functions are complex numbers, and the ϵ factors contain Cauchy singular integrals. However, some insight can be generated from an examination of a simplified version of this Fokker-Planck equation.

Consider the equation

$$\frac{\partial f}{\partial t} = + \frac{\partial}{\partial x} (g \times f) + A \frac{\partial^2 f}{\partial x^2} \tag{A.1}$$

It would describe cooling with a perfectly linear gain with Schottky noise and signal suppression negligible compared to amplifier noise.

If we drop the second derivative term, (A.1) reduces to

$$\frac{\partial f}{\partial t} - gx \frac{\partial f}{\partial x} = gf \tag{A.2}$$

The left hand side is of the form of a total time derivative

$$\frac{df(x_0)}{dt} = gf(x_0) \tag{A.3}$$

on the trajectory defined by

$$\frac{dx}{dt} = - gx, \qquad x(0) = x_0 \tag{A.4}$$

We have immediately for an initial distribution f_0

$$f(x,t) = e^{gt} f_0(x_0) = e^{gt} f_0(e^{gt}x) \tag{A.5}$$

This "method of characteristics" is also of use for more general gain functions. We have that the first derivative term increases the density and narrows the distribution; i.e., it cools.

If we keep the second derivative term of (A.1) alone, we have

$$\frac{\partial f}{\partial t} = A \frac{\partial^2 f}{\partial x} \tag{A.6}$$

which has as one solution

$$f(x,t) = \frac{1}{(4\pi At)^{1/2}} e^{-(x-x_0)^2/4At} \tag{A.7}$$

The standard deviation of this distribution is simply

$$\langle x^2 \rangle = 2At \tag{A.8}$$

In the limit $t \to 0$, $f(x,t) \to \delta(x-x_0)$ and (A.7) is actually the Green's function for (A.6). We have that the second derivative term causes diffusion, increasing $\langle x^2 \rangle$ with time.

ACKNOWLEDGEMENT

This work was supported by the Director, Office of Energy Research, Office of High Energy and Nuclear Physics, High Energy Physics Division, U. S. Dept. of Energy, under Contract No. DE-AC03-76SF00098.