Lawrence Berkeley Laboratory
University of California, Berkeley, CA 94720

DISCLAIMER
This report was prepared as an account of work sponsored by an agency of the United States Government. Neither the United States Government nor any agency thereof, nor any of their employees, makes any warranty, express or implied, or assumes any legal liability or responsibility for the accuracy, completeness, or usefulness of any information, apparatus, product, or process disclosed, or represents that its use would not infringe privately owned rights. Reference herein to any specific commercial product, process, or service by trade name, trademark, manufacturer, or otherwise, does not necessarily constitute or imply its endorsement, recommendation, or favoring by the United States Government or any agency thereof. The views and opinions of authors expressed herein do not necessarily state or reflect those of the United States Government or any agency thereof.

LBL-14204

Long-Pulse Neutral-Injector Development at the Lawrence Berkeley Laboratory*

K. H. Berkner, W. S. Cooper, K. W. Ehlers, V. L. Jacobson,
H. M. Owren, J. A. Paterson, and R. V. Pyle

Lawrence Berkeley Laboratory
Berkeley, California 94720, U.S.A.

LBL--14204

DE82 018621

Abstract

The program elements for the development of long-pulse deuterium accelerators for neutral-beam injection into fusion plasmas are described. Operational characteristics of a 4-grid, 80-kV, 40-A accelerator, designed for 30-sec operation but limited to 800 msec operation by the test facility, are presented. These pulses are long enough to establish thermal equilibrium of the accelerator grids. Beam divergences of $1.0^{\circ} \times 0.4^{\circ}$ have been achieved at 80 kV, 36 A for deuterium; $0.44^{\circ} \times 1.0^{\circ}$ at 80 kV, 47 A for hydrogen. Measured heat loads on each grid are of the order of 0.5% of the beam power.

Introduction

After the successful completion of the development of half-second neutral-beam injectors for TFTR (120 kV, 65 A deuterium) and Doublet III (80 kV, 80 A hydrogen), the emphasis in the neutral-beam program at the Lawrence Berkeley Laboratory has shifted to the development of long-pulse injectors. The distinguishing characteristic of the long-pulse regime is the requirement of active cooling of components. The half-second accelerators developed at LBL relied on the heat capacity of the accelerator grids and a low duty cycle to remove heat between beam pulses; for pulse lengths greater than about one second the temperature of the molybdenum grids can rise to the point where thermal electron emission becomes significant and active cooling is required. For the more massive plasma sources and beam dumps the long-pulse regime is reached for pulses of the order of several seconds.

At LBL the long-pulse development has concentrated on an 80-kV, 30-sec injector for MFTF-B. A long-pulse accelerator has been fabricated and beam characteristics and grid heat loads have been measured for beam pulses up to 800 msec (limited by the test facility). A long-pulse plasma source for this accelerator is in the final stages of fabrication. Our one-second test facility is being upgraded for 30-sec operation. This Neutral Beam Engineering Test Facility (NBETF) is scheduled for completion in April, 1983.

Long Pulse Accelerator

The long-pulse accelerator is shown in Fig. 1. Each of the four grids consists of an array of forty-four shaped, water-cooled molybdenum tubes with a wall thickness of 0.5 mm. The grid area of

* This work was supported by the Director, Office of Energy Research, Office of Fusion Energy, Development and Technology Division of the U.S. Department of Energy under Contract No. DE-AC03-76SF00098.

DISTRIBUTION OF THIS DOCUMENT IS UNLIMITED

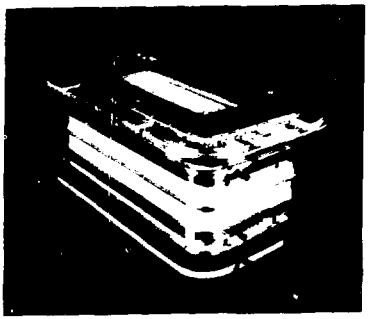

Fig. 1: Photograph of the Long-Pulse Accelerator.

the accelerator is 10 cm x 39 cm with a transparency of 60%. The insulator assembly consists of brazed alumina sections; the flanges are the same size as those of the TFTR and Doublet III accelerators. Fabrication techniques for the accelerator are described in Refs. 1 and 2.

Due to lack of a suitable long-pulse test facility, operational tests of this accelerator have been limited to pulse lengths of about three-quarters of a second on the Neutral Beam System Test Facility. These water-cooled grids have very little heat capacity and reach thermal equilibrium in several tens of milliseconds; hence, the tests were adequate to demonstrate the long-pulse capability of the accelerator grids. For the results reported here the LBL field-free plasma source was used;[3] at 36 A the molecular-ion composition of the beam was 55% D^+, 30% D_2^+, 15% D_3^+.

The accelerator has been operated with deuterium at 80 kV over a current range of 25 to 40 amperes. The beam shape was deduced from the thermal pattern produced by the neutral beam on a copper target plate located 12 m from the grids. The temperature profile measured on this plate with an array of thermocouples is consistent with the pattern expected from bi-Gaussian beamlets emitted uniformly over the 10 cm x 39 cm grid area of the accelerator (a two dimensional error function). Hence, we charactertize the beam by a 1/e width parallel to the slots and a 1/e width perpendicular to the slots. The variations of these two divergence angles with accelerator current, expressed as a perveance (the accelerator current divided by the three-halves power of the accelerator potential) are shown in Fig. 2. The divergence parallel to the slots should be insensitive to accelerator current; we observe a slight systematic variation between 0.38^o and 0.42^o. The divergence perpendicular to the slots is very sensitive to the space charge of the beam in the accelerator and can be varied between 1° and 3° by varying the accelerator current. Minimum beam divergence, $0.4^o \times 1.0^o$, is obtained at a perveance of 1.57×10^{-6} (36 amperes, 155 mA/cm^2) for deuterium. (We have only limited operating experience with hydrogen: minimum beam divergence was $0.44^o \times 1.0^o$ at 80 kV, 47 A.)

The beam divergence can also be measured spectroscopically from the Doppler broadening of the Balmer-alpha emission from the atoms in the beam.[4] With this technique the divergence of each of the fractional energy components in the beam (half-energy atoms produced by the dissociation of D_2^+ and third-energy from D_3^+) can be determined. As described in Ref. 4, it is not always possible to obtain a good fit of a Gaussian distribution to the Doppler-broadened light, in that the distributions of the half- and third-energy components tend to be more peaked. We have, therefore, calculated an

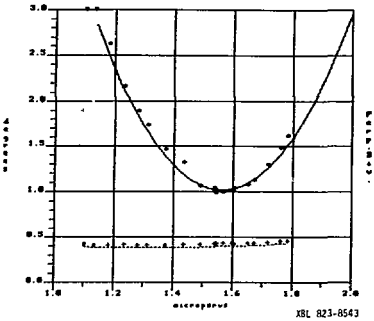

Fig. 2: Beam divergence (1/e width) determined from the heat pattern on the calorimeter 12 m from the source vs. perveance. The upper curve is the divergence perpendicular to the slots; the lower curve, parallel to the slots. 80 kV, deuterium.

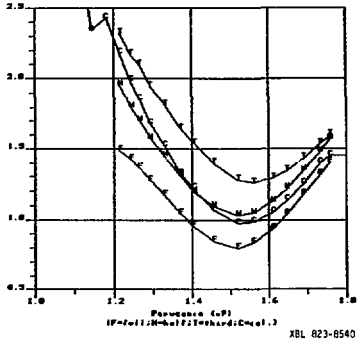

Fig. 3: Perpendicular beam divergence for the full-, half-, and third-energy atoms in the beam (determined from Doppler broadening) vs. perveance. Also shown (C) is the divergence measured with the calorimeter. 80 kV, deuterium.

RMS angle for the Doppler-broadened light and multiply by 2 for a comparison with the Gaussian angle determined from the calorimeter. The optical measurements for the perpendicular divergence of the full-, half-, and third-energy components are compared with the calorimeter measurement in Fig. 3. Note that the half- and third-energy atoms have increasingly larger divergence angles than the full-energy atoms, as expected for dissociation fragments. Thus the minimum divergence determined from the thermal footprint of the beam (all neutrals) is 1°, but the minimum divergence for the 80 keV D atoms is 0.8^{o}.

The heat load to the grids was determined by water flow calorimetry. Each of the four grids has two separate cooling circuits, so that heat loads can be measured for each half of each grid. The variation of the power to the grids with accelerator current is shown in Fig. 4 for the same conditions as the divergence variation shown in Fig. 2. The heat loads are at a minimum at a perveance of about 1.3×10^{-6} (30 A), whereas the minimum beam divergence is at 1.57×10^{-6} (36 A). The grids have been designed for a uniform heat load of 2 kW/rail. The measured heat loads range between 200 and 500 W/rail, giving a comfortable margin to allow for non-uniform heating (330 W/rail is 0.5% of the beam power at a perveance of 1.6×10^{-6}).

The results shown in Figs. 2-4 were obtained with a pulse length of 600 msec, a gas flow of 22 T-l/sec, a suppressor voltage of -2.5 kV, and 17% of the accelerator potential across the first gap. The gradient grid current (ions to the grid) ranged from 20 to 100 mA. The grid heat loads were relatively insensitive to changes in the suppressor potential; however, at lower values of the gradient grid

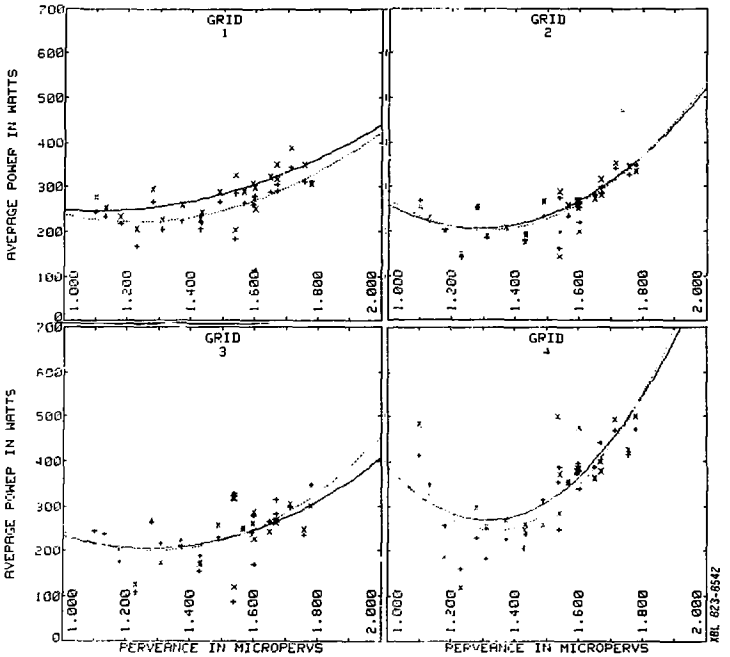

Fig. 4: Heat loads (in watts/rail) for the four grids vs. perveance for the conditions shown in Fig. 2. Grid 1 is the source grid, grid 4 is the exit grid. The two symbols (+,x) represent independent measurements for each half of each grid.

potential, the heat loads to the grids increased rapidly at perveances above 1.4×10^{-6}. The beam optics, on the other hand, are quite insensitive to the fraction of the accelerator potential applied to the gradient grid; the same minimum beam divergence was obtained at the same perveance value as Fig. 2 for potentials across the first gap ranging from 15% to 18% of the accelerator potential. At 14% the minimum beam divergence increased to 1.1°; at 13% the divergence was 1.3°.

This accelerator will be operated again for short pulses with the new long-pulse plasma source in May, 1982. Thirty-second tests await the completion of a suitable test facility.

Long-Pulse Plas... Source

A long-pulse plasma source, shown in Fig. 5, is in the final stages of construction. First tests are scheduled for late March. The source has a cross section of 24 cm x 56 cm and is 32 cm deep. It consists of a "magnetic bucket" anode, lined with an axial array of

cobalt samarium magnets spaced between cooling blocks. Thirty-eight 10-cm-long, 1.5-mm diam filaments, wound in a bifilar helix, are mounted from the back plate. These will be operated in the emission-limited regime to prolong filament life. An actively cooled rear plate serves as a dump for backstreaming electrons. Based on experience with similar plasma source designs,[5] we expect a significant improvement in the D^+ fraction of the beam. The plasma source will be described in greater detail in a separate article after operating parameters have been obtained.

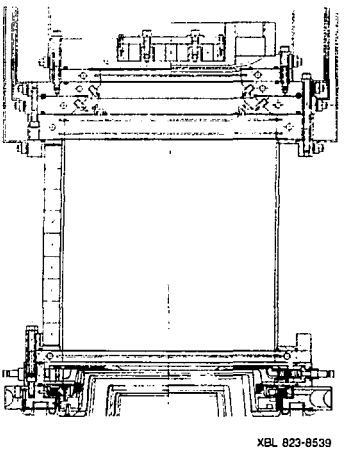

Fig. 5: Schematic of the long-pulse plasma source.

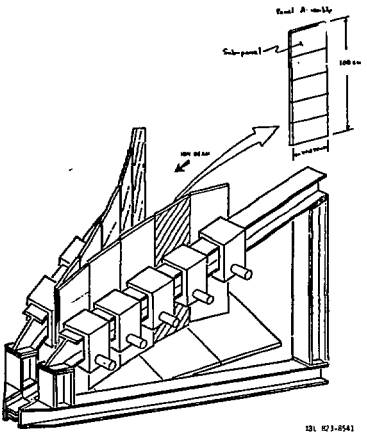

Fig. 6: Schematic of the actively cooled dump for the Neutral Beam Engineering Test Facility.

Beam Dump Development

The Neutral Beam Engineering Test Facility (NBETF), scheduled for completion in April 1983, will have the capability for testing 120-kV, 65-A, 30-sec beam pulses at a 10% duty cycle. The beam dump will be an adjustable array of 20-cm x 20-cm actively cooled copper panels (Fig. 6) capable of dissipating heat fluxes of 2 kW/cm^2. A prototype panel, described in Ref. 6, has been successfully tested with beam pulses up to the 2 kW/cm^2 design value. The panels are now in production by McDonnell Douglas Astronautics Corporation.

Power System Development

High-voltage switching on the NBETF power system will be implemented with thyristor switches[7] and regulation will be achieved with thyristor-controlled electronic contactors on the primary side of the high-voltage transformer.[8] This eliminates vacuum tubes, and

the associated 10-15% power loss in the tubes, from the circuit. Thyristor switching, without regulator tubes, has been used successfully at LBL on neutral-beam test stands for several years.

Acknowledgements

This work was supported by the Director, Office of Energy Research, Office of Fusion Energy, Development and Technology Division of the U.S. Department of Energy under Contract No. DE-AC03-76SF00098.

References

1. J.A. Paterson, G.W. Koehler, R.P. Wells, and L.A. Biagi, Proc. 8th Symp. on Engr. Prob. of Fusion Research, IEEE Pub. No. 79CH1441-5 NPS, San Francisco, CA (November 1979) p. 1065.

2. J.A. Paterson, G.W. Koehler, and D.P. Yee, Proc. 9th Symp. on Engr. Prob. of Fusion Research, IEEE Pub. No. 81CH1715-2 NPS, Chicago, IL (October 1981) p. 233.

3. K.W. Ehlers, Proc. 7th Symp. on Engr. Prob. of Fusion Research, IEEE Pub. No. 77CH1267-4-NPS, Knoxville, TN (October 1977) p. 291.

4. C.F. Burrell, W.S. Cooper, R.R. Smith, and W.F. Steele, Rev. Sci. Inst. 51, 1451 (1980).

5. K.H. Berkner, J.H. Feist, V.L. Jacobson, A.F. Lietzke, J.W. Roberts, R.R. Smith, A. Wekhof, and J.E. Willis, Proc. 9th Symp. on Engr. Prob. of Fusion Research, IEEE Pub. No. 81CH1715-2NPS, Chicago, IL (October 1981) p. 763.

6. W.A. Rinehart, M.G. Grote, G.J. Inukai, H.C. Mantz and J.A. Paterson, Proc. of AIAA/ASME Joint Fluids, Plasma, Thermophysics, and Heat Transfer Conference, June 1982, St. Louis, MO.

7. J.V. Franck, A.A. Arthur, L.A. Brusse, and W. Low, Proc 7th Symp. on Engr. Prob. of Fusion Research, IEEE Pub. No. 77CH1267-4-NPS, Knoxville, TN (October 1977) p. 1576.

8. I.C. Lutz, C.A. Arthur, G.J. deVries, and H.M. Owren, Proc. 9th Symp. on Engr. Prob. of Fusion Research, IEEE Pub. No. 81CH1715-2-NPS, Chicago, IL (October 1981) p. 427.