LBL-14260

# Lawrence Berkeley Laboratory

UNIVERSITY OF CALIFORNIA

RECEIVED
LAWRENCE
BERKELEY LABORATORY
LIBRARY AND
DOCUMENTS SECTION

## Accelerator & Fusion Research Division

Presented at the Workshop on the Laser Acceleration of Particles, Los Alamos National Laboratory, Los Alamos, NM, February 18-23, 1982; and to be published in the Proceedings

# REPORT OF THE WORKING GROUP ON MEDIA ACCELERATORS

Andrew M. Sessler

February 1982

TWO-WEEK LOAN COPY

This is a Library Circulating Copy
which may be borrowed for two weeks.
For a personal retention copy, call
Tech. Info. Division, Ext. 6782.

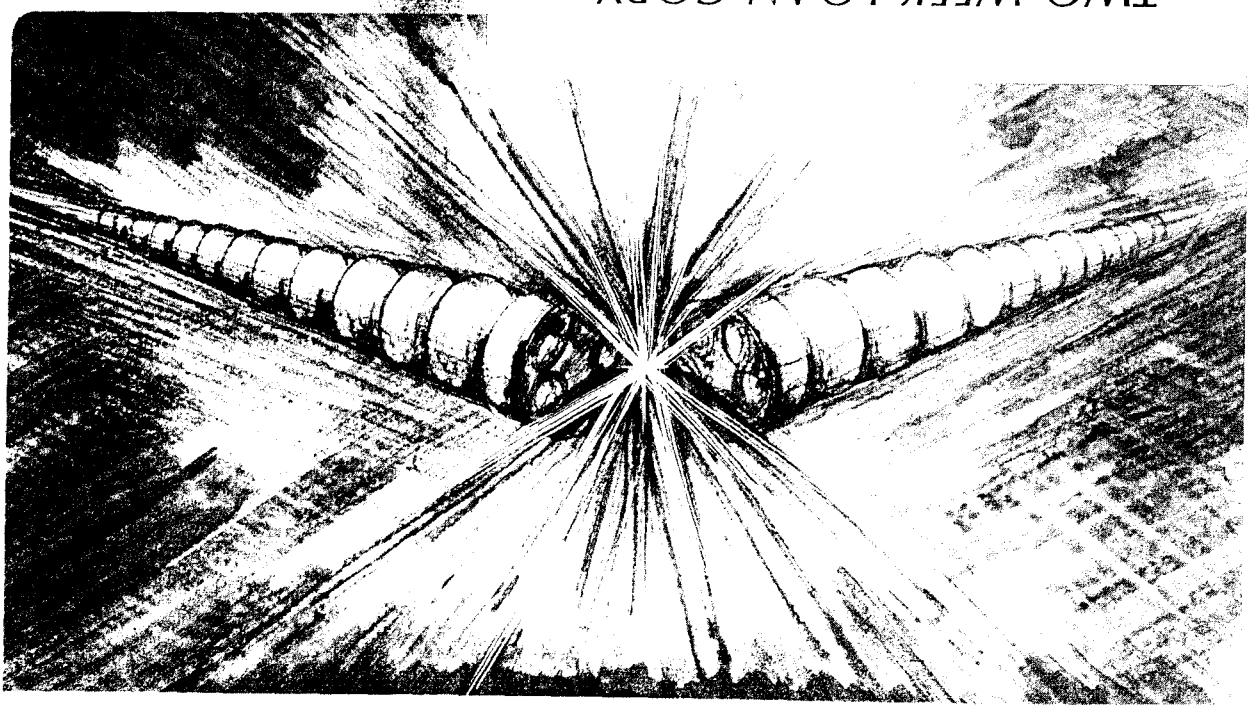

LBL-14260 c.2

Prepared for the U.S. Department of Energy under Contract DE-AC03-76SF00098

# REPORT OF THE WORKING GROUP ON MEDIA ACCELERATORS*

Andrew M. Sessler

Lawrence Berkeley Laboratory
University of California
Berkeley, CA 94720

April 12, 1982

ABSTRACT

A summary is given of the activities of those in the Media Accelerator Group. Attention was focused on the Inverse Cherenkov Acceleraotr, the Laser Focus Accelerator, and the Beat Wave Accelerator. For each of these the ultimate capability of the concept was examined as well as the next series of experiments which needs to be performed in order to advance the concept.

## I. Introduction

The Media Accelerator Group found itself in the enviable position that for three different accelerators there already existed theories of how they operated and, furthermore, experiments had already been performed which were in accord with these theories. Given this information, it was quickly decided that since only a few days were available to us, we would focus attention upon these three schemes and forego the examination of other proposals. Thus, we only considered the Inverse Cherenkov Accelerator,[1] the Laser Focus Accelerator,[2,3] and the Beat Wave Accelerator.[4,5,6] For each of these we reviewed the theory of its operation; considered the ultimate capability of an accelerator of this type; discussed the various technical, theoretical, and experimental problems which need to be addressed; and outlined theoretical and experimental work which could be undertaken so as to advance our understanding of this particular accelerator.

As you will see, these three devices are quite different in the degree to which they are understood, in the technical problems which must be overcome in order to have them work, in their ultimate promise, in the form which they would take, and in the uses to which they might be put.

---

* This work was supported by the Director, Office of Basic Energy Sciences Division, of the U. S. Department of Energy under Contract No. DE-AC03-76SF00098.

Members of the Working Group, whose efforts are summarized here were W. Bostick, A. Chao, F. Cole, G. Fontana, H. Hora, C. Joshi, V. Nardi, D. Neuffer, M. Piestrup, L. Rivkin, R. Ruth, A. Sessler, R. Sudan, D. Sullivan, T. Tijima, and W. Willis.

What the three devices do have in common is that they all require a medium through which the particles to be accelerated must move. For the Inverse Cherenkov Accelerator (ICA) this medium is a gas which has an index of refraction greater than unity and, hence, slows down the laser wave so that it can resonate with the material particle being accelerated. In other regards the medium is not active.

In the Laser Focus Accelerator (LFA) and the Beat Wave Accelerator (BWA) the medium is a plasma and active. The LFA works by employing the non-linear effect in which the index of refraction depends upon the density so that there is self-focussing of the laser beam, while the BWA depends crucially upon media -- i.e., plasma -- motion. The BWA is really a form of collective accelerator in which the medium is organized by the laser light, and the acceleration is done by the electrostatic forces which result from this organization.

Thus the three devices employ the medium in very different ways. The three accelerators may not include the "best" media accelerator, but they are sufficiently different that the study of them even if it is not sufficient to span the range of possibilities, is, at least, suggestive of the range which is possible in media accelerators. Study of these three concepts is bound to be productive; in this report we review the deliberations which a small number of scientists gave, in only a few days, to three fascinating -- and stimulating -- concepts.

## II. Inverse Cherenkov Accelerator

This accelerator employs the Cherenkov Mechanism: if a particle moves faster through a medium than light travels in the same medium, then it will radiate (that is form a "wake"). The ICA simply runs this effect backwards; in other words it uses very intense light (from a laser) travelling in a medium in order to accelerate particles.

### A. Physical Principles

Imagine a photon of wave number $\underset{\sim}{k}$ and frequency $\omega$ impinging upon an electron of momentum $\underset{\sim}{p}_1$ and $E$. If the photon is absorbed then in the final state there is only an electron with momentum $\underset{\sim}{p}_2$ and energy $E$. Conservation of energy and momentum yields:

$$\underset{\sim}{p}_1 + \hbar \underset{\sim}{k} = \underset{\sim}{p}_2, \qquad \text{(II.1)}$$

$$E_1 + \hbar \omega = E_2.$$

Because all of this takes place in a medium of index of refraction, n, we have the relation between wave number and frequency

$$|\underset{\sim}{k}| = \frac{\omega n}{c} . \qquad \text{(II.1)}$$

In practice, the photon energy and momentum are very small and one quickly deduces that if $\theta_c$ (the "Cherenkov angle") is the angle between the photon and the electron then

$$\cos \theta_c = \frac{1}{n\beta} , \qquad (II.3)$$

where $\beta$ is the relativistic factor of the electron; i.e., $\beta = v/c$ with v the speed of the electron.

In practice, the index of refraction is very close to unity; in fact for $H_2$ of 1 Atmosphere

$$n-1 \approx 10^{-4} . \qquad (II.4)$$

Since $\beta$ is also very close to unity, and it is often most convenient to re-write (II.3) in the form:

$$\theta_c^2 + \frac{1}{\gamma^2} \approx 2(n-1) \qquad (II.5)$$

where $\gamma$ is the relativistic factor

$$\gamma^2 = \frac{1}{1-\beta^2} , \qquad (II.6)$$

and all three terms in (II.5) are small.

The energy gain per unit length, due to a laser field of electric field strength E, is:

$$W = eE \sin \theta_c \sin \phi, \qquad (II.7)$$

where $\phi$ is the phase angle of a particle in the electromagnetic wave. In practical units, the energy gain of electrons, $\Delta E$, in a length, L, subject to Cherenkov light of wavelength, $\lambda$, is

$$\Delta E = 68.8 \sin \theta_c \left(\frac{PL}{\lambda}\right)^{1/2} \sin \phi, \qquad (II.8)$$

where $\Delta E$ is in GeV, P is the laser power in terrawatts, L is in meters, and $\lambda$ is in microns.

Typically, $\theta_c \approx 15$ millirad and E is limited either by laser power or by breakdown in the gas which constitutes the accelerating medium. The breakdown field strength is not precisely known, but we take

$$E_{Breakdown} \equiv E_b \approx 10^4 \frac{MV}{m} . \qquad (II.9)$$

Combining these facts we obtain, from II.7 that $W \approx 150$ MeV/m. This is a considerable field, but not extraordinary.

One can do better by arranging the light in a geometry which makes all field components, except the accelerating field, vanish on an axis which becomes the line along which one accelerates. A cone of properly polarized (clearly radially) light will produce fields of the form[7]:

$$E_z(r,z) = E_0 J_0\left(\frac{k\ r\ \tan\theta_c}{\beta}\right) e^{-\frac{ikz}{\beta}} \quad ,$$

$$E_r(r,z) = i\ \cot\theta\ E_0 J_1\left(\frac{k\ r\ \tan\theta_c}{\beta}\right) e^{-\frac{ikz}{\beta}} \quad ,$$

$$H_\theta(r,z) = \frac{i\ n\ E_0}{\sin\theta}\sqrt{\frac{\varepsilon_0}{\mu_0}}\ J_1\left(\frac{k\ r\ \tan\theta_c}{\beta}\right) e^{-\frac{ikz}{\beta}} \qquad \text{(II.10)}$$

In these formulas, all symbols have already been defined with the exception of the Bessel functions $J_0$ and $J_1$.

As can be seen, from (II.10) only the accelerating field $E_z$ is non-zero at r=0. However, for $r \neq 0$ the radial field quickly becomes larger than $E_z(o,z)$(mathematically, because of its large coefficient and, physically, because the cancellation can only be made to occur along a line and must be very exact).

Also, one should note that $E_z(r,z)$ goes to zero as one moves away from the accelerating axis r=0. Thus the accelerated beam must have a radius, $r_b$, less than the first zero of $J_0$;

$$r_b < \frac{2.4\ \lambda}{2\pi\ \tan\theta_c} \quad , \qquad \text{(II.11)}$$

It should be noted that the applied fields actually produce a focusing of the accelerated electron beam. Expressions for this were derived[7] and could be employed to quantitatively balance this focusing force against the space-charge defocusing and the beam emittance. The Group, however, did not have the time to persue this further.

B. Full-Scale Machines

We shall give two examples:

Example 1 — For electrons with energies of tens of Gev's the multiple-scattering leading to beam spreading in energy and angle is small enough so that one can make an accelerator of 50 m length, taking:

$$\begin{aligned} L &= 50\ \text{m}, \\ \lambda &= 10\mu\text{m}, \\ P &= 70\ \text{TW}, \\ \theta_c &= 20\ \text{mrad} \end{aligned} \qquad \text{(II.12)}$$

One finds an acclelerating gradient of 500 MeV/m and a total energy gain, $\Delta E$, of 25.8 GeV.

If one considers a beam radius, $r_b$, of 50 μm, then $E_z$ at the edge of the beam is 90% of $E_z$ on axis, and the radial field within the beam is less than $7.7 \times 10^3$ MV/m (which is below the breakdown field of II.9).

However, the radial field peaks at 146 μm and there attains $1.5 \times 10^4$ MV/m which is above the spark breakdown value. Thus, one can expect sparks outside the beam, which may be acceptable.

Example 2 —In this example, we considered simply de-rating the laser power, but otherwise keeping the same parameters as before, i.e.,

$$\begin{aligned} L &= 50 \text{ m}, \\ P &= 30 \text{ TW}, \\ \lambda &= 10 \ \mu\text{m}, \\ \theta_c &= 20 \text{ mrad}. \end{aligned} \qquad \text{(II.13)}$$

Now the accelerating gradient is 340 MeV/m, and the total energy gain, $\Delta E$, is 17 GeV.

We can now consider a beam radius, $r_b$, of (say) 100 μm. The field variation of $E_z$ across the beam is now 30%. The radial field still peaks at 146 μm, but now attains the value of $10^4$ MV/m, which is just the breakdown field and therefore (presumably) will be just low enough not to cause sparks anyplace.

As you see, these two examples are examples of interesting accelerators. One can imagine other machines such as one in which gas is confined to a narrow tube (less than 146 μm) which explodes when it is irradiated, but still the gas is inertially confined and effective during the accelerating pulse. This, and some other schemes, were not examined in the brief time available to the working group. It was felt that the two examples sufficed to demonstrate that a full-scale machine of an ICA would be interesting.

One can, to obtain even more interesting machines, consider increasing $\theta_c$, or decreasing $\lambda$, or increasing P. None of these changes are easy, however, and the examples, given above are probably near the limit (or even beyond!) of an ICA.

C. Experimental Program

As a next step it was felt to be important to employ a high power $CO_2$ laser in a "cone-geometry." The rationale is to develop optical and electron beam techniques that can be employed on large scale systems.

The ingredients of the proposed experimental program are:

1. Use the SLAC or SCA electron beams.
2. Use a $CO_2$ laser with 1 ns pulse and a power rating of (say) $10^{10}$ W. The $CO_2$ laser (as contrasted with the Niodinium laser of Ref. 1), decreases the effect of multiple scattering.
3. Use a radially polarized, plane wave cone for injecting the laser beam, while keeping to a minumum the number of optical components.

A sketch of the experimental lay-out is given in Fig. 1.

## III. LASER FOCUS ACCELERATOR

A sufficiently intense beam of light, upon entering a medium, will self-focus itself and, consequently, produce a very large gradient or electric field strength. This large gradient will, by non-linear effects, accelerate particles. This is the basic concept of the Laser Focus Accelerator (LFA).

### A. Physical Principles

A laser beam of intensity (Power/Unit Area), I, and diameter, d, when $I \gtrsim I_0$ will self-focus in a medium with the focus distance $\approx$ d. The threshold intensity, $I_0$, a function of wavelength (and not very well known) is roughly:

$$I_0 \approx 10^{18}\ \mathrm{W/cm^2}, \quad \lambda = 1\ \mu\mathrm{m};$$

$$I_0 \approx 10^{16}\ \mathrm{W/cm^2}, \quad \lambda = 10\mu\mathrm{m}; \qquad \text{(III.1)}$$

In fact, $I_0$ could be less than the values (III.1) by as much as a factor of 50.

In a medium, characterized by an index of refraction, n, there is a ponderomotive force density, $\underset{\sim}{F}$, given by:

$$\underset{\sim}{F} = -(1+n^2)\ \underset{\sim}{\nabla}(E^2/8\pi) \qquad \text{(III.2)}$$

If the pulse of laser light of duration, $\tau$, is too long, then the medium, which consists (probably) of a plasma, will disperse and hence there will no longer be self-focusing. Thus the pulse must be shorter than a characteristic time, $\tau_0$, wich depends upon frequency. One finds:

$$\tau_0 \approx 5\ \mathrm{ps}, \quad \lambda = 1\ \mu\mathrm{m};$$

$$\tau_0 \approx 50\ \mathrm{ps}, \quad \lambda = 10\ \mu\mathrm{m}; \qquad \text{(III.3)}$$

Providing $\tau < \tau_0$ and $I > I_0$ then these two effects produce ions of energy, $\Delta E$, with

$$\Delta E \approx 3ZP, \qquad \text{(III.4)}$$

where Z is the atomic number of the species accelerated, P is the laser power in terrawatts, and the energy, $\Delta E$, is in MeV. This Eq. (III.4) is due to H. Hora[8] and is the result of analytic work and also of computer studies.

### C. The Accelerator

In a single laser focus one can expect particles which would be of interest for a number of applications. We have shown, in Fig. 2, the theoretical curves (Eq. (III.4)) as well as the result of experimental observations. The facts that 15 MeV protons, 38 times ionized tungsten, and ions whose total energy is greater than 100 MeV have all been observed and fall close to the appropriate curves suggests that the theoretical explanation is correct.

On this basis one can expect, in one focus (and no one knows how to have repeated focii or how to have the accelerated particles acted upon by a second focus), $\approx 10^{10}$ ions with an energy of $\approx$ 50 MeV/nucleon. These particles would come out in a pulse ranging from 10 ps to 100 ps with an energy spread which is presently unknown but which might be as small as $\Delta E/E \approx 10\%$. For this one would need $P \approx 10^{13}$ W and the repetition rate, which would depend strongly on the interest in the accelerator, is probably at best 1 Hz.

Such an accelerator could be used for nuclear reaction studies, spallation studies, muon generation, and the study of very short half-life nuclides. It was not clear to the Group just what applications -- if any -- would make the LFA competitive with other (non-laser) accelerators.

It was noted, however, that the $CO_2$ lasers at LANL and the Nd glass lasers at the Australian National University could be employed to check the predicted dependence of energy gain upon laser power, laser pulse length, and laser wavelength. These experiments are modest in cost and time and could, readily, be fitted into the current program schedules.

## IV. BEAT WAVE ACCELERATOR

Perhaps of all the laser acceleration ideas which were considered by participants in this workshop, the Beat Wave Accelerator (BWA) has the most promise and the most uncertainty. That is; the accelerator is based upon controlling very complicated non-linear plasma phenomena which, to date, have only been studied in a one-dimensional approximation (but studied rather extensively by means of particle simulation). On the other hand, the accelerator has the potential of producing higher gradients than seem possible with <u>any</u> other scheme.

### A. Physical Principles

The basic idea[4] is to shine into a plasma two laser beams, having angular frequencies $\omega_1$ and $\omega_2$, where the plasma frequency, $\omega_p$ is just the difference frequency $\omega_1-\omega_2$. Under these circumstances the plasma will bunch and there will result an electrostatic field which is then employed to accelerate particles.

The plasma density may be high ($10^{17}$ - $10^{18}$ $cm^{-3}$) (much higher, for example, than in intense relativistic electron beams where $n \lesssim 10^{14}$) and the bunching occurs over the distance of a plasma wavelength, $2\pi c/\omega_p$, which can be much less than the characteristic distance of bunching in other collective accelerators. Hence, the accelerating field in the BWA can, in principle, be very much greater than in all other collective (or laser) plasma accelerators.

Because the plasma motion is caused by and organized by the laser light, it is believed that the motion will be stable motion, and hence, that the BWA will work as predicted. The BWA employs, actually, very non-linear plasma motion. In fact, there is essentially complete bunching of the plasma. However, it is useful to consider the basic (linear) interaction of a photon with a plasma.

Consider a single photon of frequency, $\omega_0$, and wave vector, $\underset{\sim}{k}_0$, which undergoes Raman forward scattering. The final state will have a photon, of wave vector, $\underset{\sim}{k}$, and frequency, $\omega$, and a plasmon of wave vector, $\underset{\sim}{K}$, and frequency $\omega_p$. Between initial and final state we must conserve energy and momentum and, thus:

$$\underset{\sim}{k}_0 = \underset{\sim}{k} + \underset{\sim}{K},$$

$$\omega_0 = \omega + \omega_p \tag{IV.1}$$

These relations are, of course, just the Manley-Rowe conditions.

Now in a plasma the photon is "dressed"; i.e., surrounded with a polarization charge, and hence

$$\omega_0^2 = k_0^2\, c^2 + \omega_p^2,$$

$$\omega^2 = k^2\, c^2 + \omega_p^2. \tag{IV.2}$$

Alternatively, these formulas can, of course, be obtained from the dispersion relation for waves in a plasma.

Combining (IV.1) and IV.2) we have two equations for two unknowns; namely the frequency, $\omega$, of the scattered light and the wave number, K, of the plasma excitation. One finds that

$$K \approx \omega_p/c,$$

$$\omega = \omega_0 - \omega_p \tag{IV.3}$$

The plasma excitation has a phase velocity, $v_{ph}$, where

$$v_{ph} \equiv \omega_p/K \approx c. \tag{IV.4}$$

The process can happen again and again. One finds that in a non-linear treatment one has $v_{ph} \approx v_{group} \approx c$, and, thus, a "wake" which moves along at this speed. One must, also, consider the effect of two laser beams. The basic physics is, however, as described here.

At what field strength, $E_L$, will the effect saturate? One estimate is given by the assumption of essentially complete bunching at the wave length $c/\omega_p$. Thus from

$$\underset{\sim}{\nabla} \cdot \underset{\sim}{E} = 4\pi ne, \tag{IV.5}$$

we have

$$\frac{\omega_p}{c} E_L = 4\pi ne,$$

and hence

$$E_L = \frac{\omega_p\, cm}{e} \quad . \tag{IV.6}$$

A second estimate is given by assuming the trapping potential, $e\phi$, is of the order $1/2\ mv^2$ with $v=c$. Combining this with

$$\phi \approx \frac{E_L c}{\omega_p},$$

one obtains exactly the same formula for the saturation field, $E_L$, as from the first estimate (IV.6).

The formula for $E_L$, IV.6, may be written

$$e\,E_L = \left(2\pi n r_o^3\right)^{1/2} \frac{mc^2}{r_o}, \qquad \text{(IV.7)}$$

where $r_o = e^2/mc^2$ is the classical electron radius and thus $mc^2/r_o = 1.8 \times 10^{14}\ \frac{\text{MeV}}{\text{m}}$. For $n = 10^{17}\ \text{cm}^{-3}$ one obtains $eE_L = 2 \times 10^4$ MeV/m.

If the above estimate is roughly correct (even a factor of 10 degradation is performance still gives 2 GeV/m!) will other waves grow and, perhaps, have a serious effect upon $E_L$? There are lots of other waves in a plasma in particular, the backward scattered Raman wave. Going through energy and momentum balance as before, we now find

$$K \approx 2\ k_o\ . \qquad \text{(IV.8)}$$

The phase velocity of this wave is

$$v_{ph} = \frac{c}{2} \frac{\omega_p}{\left(\omega_o^2 - \omega_p^2\right)^{1/2}}; \qquad \text{(IV.9)}$$

and hence $v_{ph} \approx \left(\frac{\omega_p}{2\omega_o}\right) c$. This wave grows very fast (even faster than the forward going wave), but because the backward wave has $v_{ph} \ll c$ it will be much more strongly Landau damped than the forward-going wave. Thus we believe the backward scattered Raman wave will be very different than the forward-going wave.

Extensive numerical simulation has been done on a 1-D version of the BWA.[6] This work tends to confirm the above analytic estimates.

Most importantly, an experiment has been performed[5] which is in agreement with the theory. Of course, the laser employed was modest and hence the accelerating gradient obtained was modest, but the experiment gives creedance to the theory which predicts, in other regimes, quite remarkable behavior.

In the experiment a very thin (130 Å) carbon foil was irradiated with a 700 ps pulse of $CO_2$ light. (This experiment employed a single sharp-rising pulse rather than a beat wave.) The foil was heated to very high temperatures ($T \approx 20$ keV) and under-dense to the laser light. It was found that the highest energy

electrons ($E \gtrsim 400$ keV) were peaked forward and that there were (about) $10^{11}$ of them. The forward electrons could be characterized by a temperature of 90 - 100 keV, and electrons with energy as high as 1.4 MeV were observed although the laser was only large enough to create a "quivering velocity" of 0.3 c.

B. Parameters of a Full-Scale Machine

Very little time was spent by the Working Group, on full-scale machines. Nevertheless, in Fig. 3 we sketch one version of a large 20-50 GeV accelerator. In addition, an alternative high energy accelerator design is presented in the contributed paper by R. Ruth and A. Chao together with some basic physics calculations on the workings of a plasma/laser accelerator.

C. Theoretical Subjects Suggested by of the BWA

The Group spent considerable time outlining -- attempting to be exhaustive in its deliberations -- the problems which have yet to be addressed. The Group came up with the following problems:

1. How large is the longitudinal electric field ?

   ($E_L = \frac{\gamma_\perp^{1/2} m c\omega_p}{e}$ seems a reasonably accurate estimate.)

2. What is the threshold laser strength? (The threshold laser electric field probably is

   $E = \sqrt{2}\,\frac{mc\omega}{e}$ , but perhaps instabilities lower the threshold.)

3. What is the optimum frequency separation of two beams $\omega_1 - \omega_2$ (Is it $\omega_p$ or $2\omega_p$ or some definite function of laser amplitude?)
4. What is the effect of the electron distribution function on the beam quality (longitudinal)? Is a hot distribution better than a cold one? (If one wants to mainly accelerate ions, is it useful to trap electrons?)
5. Transverse stability of beam and/or plasma:
   a. Self-current, self-magnetic field, filamentation instabilities, return current, etc. (If the beam radius $r_0$ is larger than $c/\omega_p \approx 1/2 \times 10^{-2}$ cm, then the return current runs on the surface of the electron beam.)
   b. Self-Channeling
      (This time scale is acoustic time scale: therefore, takes place only when the beam duration is verylong.)
   c. Laser coherency and focusing
   d. Emmitance growth due to side scattering (Amount of side scattered light energy as a function of Z.)

Some of these subjects, it was felt, could be illuminated by analytic work:

a. A similar analytical approach done for the free electron laser should be done for this concept.
b. Linear stability of possible transverse instabilities should be analyzed.
c. Phase relation of ions to the electrostatic field should be analyzed as a function of energy.

Further 1-D particle simulation work needs to be done on:

a. Saturated accelerating field strength size.

   Already know $E_L \geq \frac{\gamma_\perp^{1/2} mc\omega_p}{e}$ due to nonlinearity of saturated wave. (Note $\gamma$ is determined by laser intensity (Vo/c).)

b. Does an absolute laser threshold exist $(E_o > 2 \frac{mc\omega_o}{e})$ or will Raman forward scattering instability saturate $E_L$ in a reasonable distance or time?
c. At saturation the nonlinear wave steepening in the single packet case results in the optimum packet case being a plasma wavelength ($\lambda_p = 2\pi c/\omega_p$). Is this true of the beam wave acceleration also?
d. Can particle beam quality be improved from its presently observed exponential distribution based on:
   1. Injecting low density preaccelerated particle bunches?
   2. Using a hot vs. cold temperature plasma?
e. Will a relativistic two-stream instability develop
   1. When ions are included in the simulation (ion-electron)?
   2. If low emmitance preaccelerated particles are injected into the beat wave packets (ion-electron, electron-electron, ion-ion)?
f. Coherency/synchronism of particles and waves?

To address the remaining subjects one will need 2D particle simulation work. This should allow one to study:

a. Does the beam pinch or expand?
   Possibilities:
   1. Return current $\approx$ beam current flows inside beam channel. No self-magnetic field, beam expands radially.
   2. Return current flows outside beam channel. If $N_i/N_e > 1/\gamma^2$ (almost certainly true) beam will pinch.
b. Does Raman side scatter increase emittance or can it be suppressed by Landau damping similar to Raman backscatter?
c. Can laser self-channeling (decreased density in beam channel) due to the radial pondermotive force destroy the frequency matching ($\omega_1 - \omega_2 = \omega_p$) condition? Can it be overcome where $\tau_{pulse} < r_{spot}/c_{sound\ speed}$.

d. How does diffraction of the laser beam affect the accelerated particles as they transit the focal region?

e. Does the particle beam filament? 1) 2-d r-$\theta$ geometry; 2) 3-D full cylindrical geometry.

D. Two Experiments

The group proposed two experiments which would greatly increase our understanding of the BWA.[9] It was felt that these experiments should be done in the near future.

Laser Requirement:

1. 100 J - 1000 J in $\approx$ 1 ns. One beam of the Helios laser at LANL would suffice.
2. Multiline $CO_2$ oscillator going on $P(2\nu)_{10.6\ \mu m}$, $R(1\delta)_{10.27\ \mu m}$ and $P(2\nu)_{9.6\ \mu m}$ bands

Target Requirements:

1. Thin foil targets (C, CH, Au Foils 50-500°); $\theta$ pinch plasma source $10^{16} < n_e < 5 \times 10^{18}$ cm$^{-3}$)

Diagnostic Requirements:

1. Diagnostic $CO_2$ beam going on $p(20)_{10.6\ \mu m}$ line
2. IR double grating spectrometer
3. IRMA (infrared multichannel analyzer) or pyroelectric array + data acquisition and handling capability
4. Cu:Ge, Hg:Cd:Te Cold detectors
5. Nuclear emulsion particle detection and Thompson parabolas + CN films
6. X-ray continuum detectors for 10 keV to 300 keV.
7. Usual beam and target diagnostics e.g., - photon drag detection, infared vidicon, calorimeters

Manpower Requirements

1. Two post docs
2. Two graduate students

## REFERENCES


1. M. A. Piestrup, G. B. Rothbart, R. N. Fleming, and R. H. Pantell, Jour. Appl. Phys. 46, 132 (1975).
2. H. Hora, E. L. Kane, and J. L. Hughes, Jour. Appl. Phys. 49, 923, (1878).
3. H. Hora, D. A. Jones, E. L. Kane, P. Lalousis, and P. R. Wiles, Proc. of the 4th Intl, Conf. on High-Power Electron and Ion Beam Researcn and Technology, Palalseau, (1981).
4. T. Tajima and J.M. Dawson, Phys. Rev. Lett. 43, 267, 1979.
5. C. Joshi, T. Tajima, J. M. Dawson, H. A. Baldis, and N. A. Ebrahim, Phys. Rev. Lett. 47, 1285, (1981).
6. D. J. Sullivan and B. B. Godfrey, IEEE Trans on Nuclear Science, NS-28, 3395, (1981).
7. G. Fontana, private communication.
8. H. Hora, private communication.
9. C. Joshi, private communication.

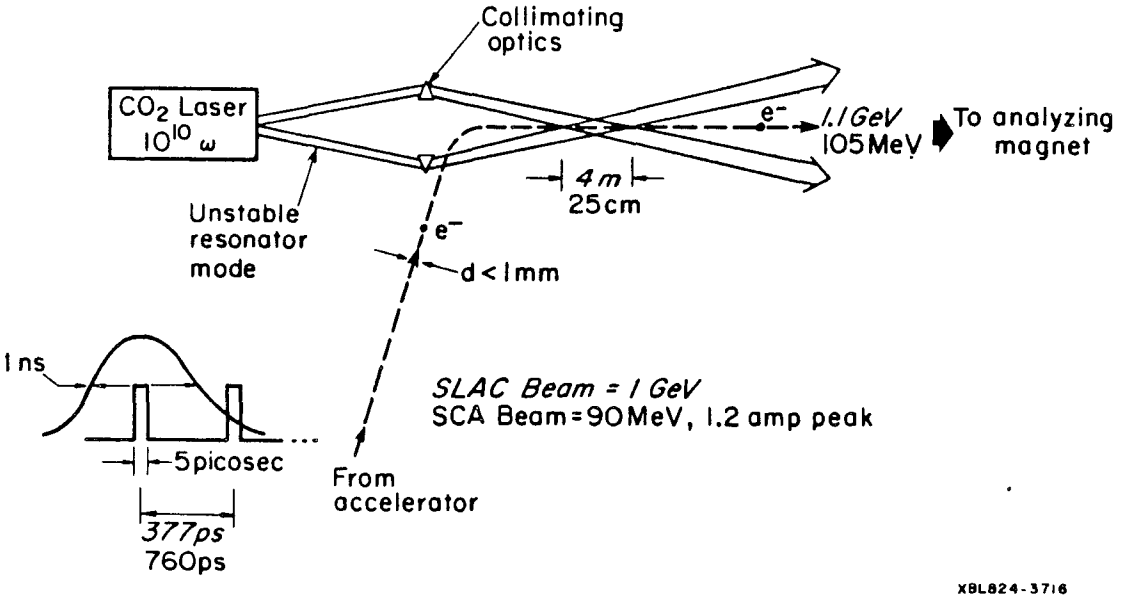


Figure 1. Layout of an Inverse Cherenkov Accelerator experiment.

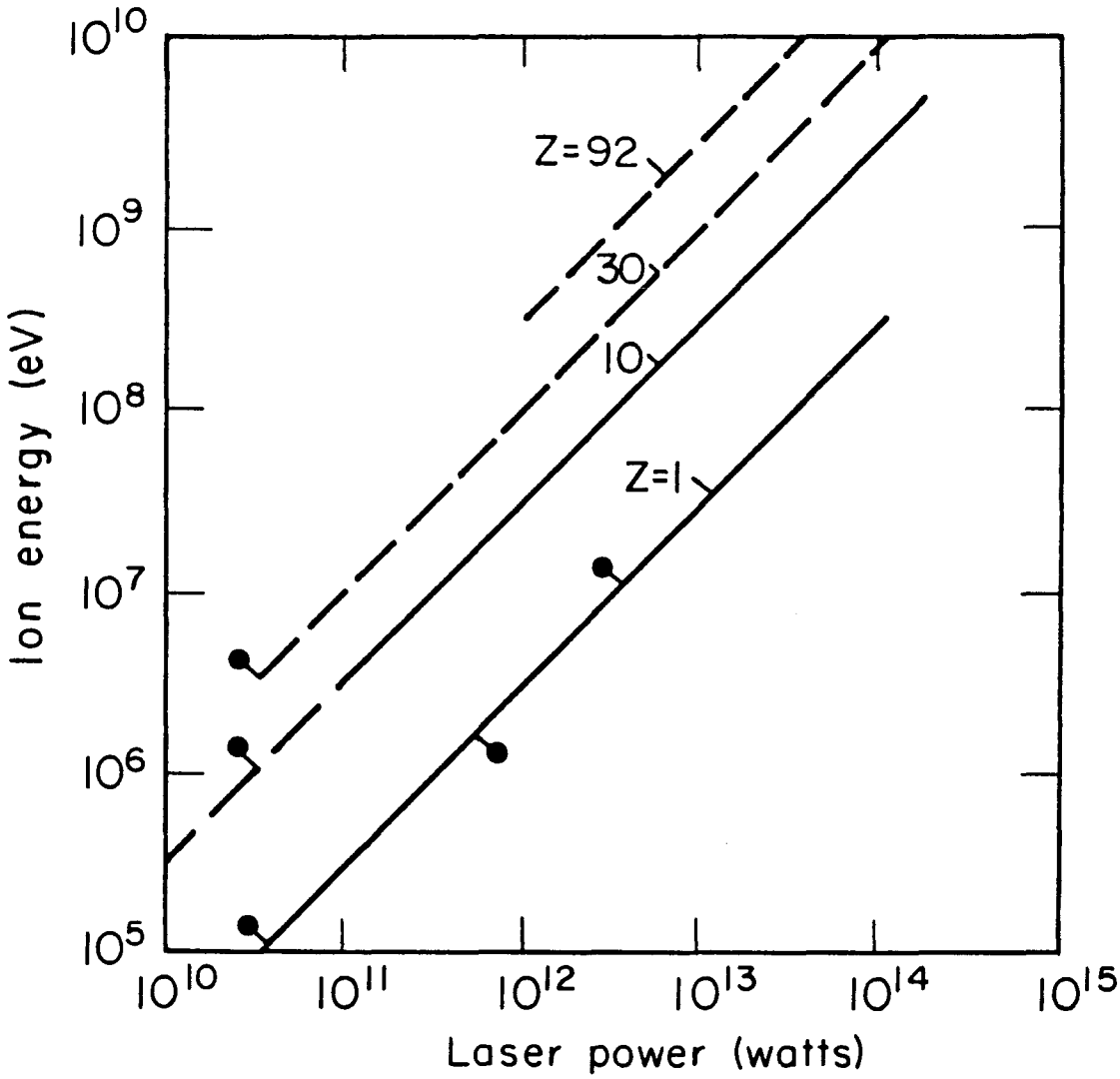


XBL 824-3712

Figure 2. Performance expectations of the Laser Focus Accelerator as a function of laser power. The curves are due to H. Hora[8] and the points indicate experimental observations.

24 Stage Laser Beat Wave Accelerator 20-50 GeV Total Gain

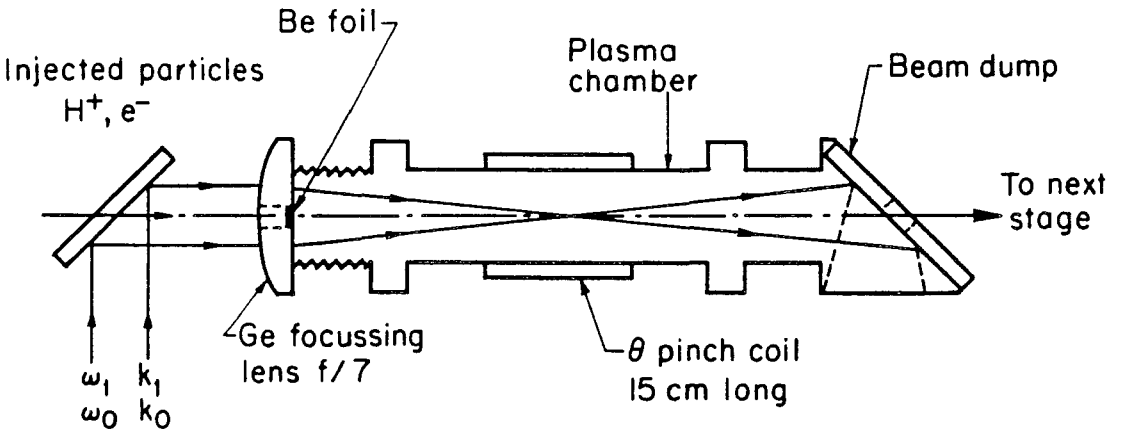


| | |
|---|---|
| Beam intensity per beam | $\sim 5 \times 10^{15}$ W cm$^{-2}$, $v_0/c \sim 0.5$ |
| Plasma density | $\sim 10^{17}$ cm$^{-3}$ |
| Plasma temperature | $\sim$ 100 eV |
| Gain per stage | $\sim$ 1 - 2 GeV |

XBL824-3715

Figure 3. A full-scale Beat Wave Accelerator for producing electrons of 20-50 GeV, with 24 stages and each stage giving 1-2 GeV to the electrons.

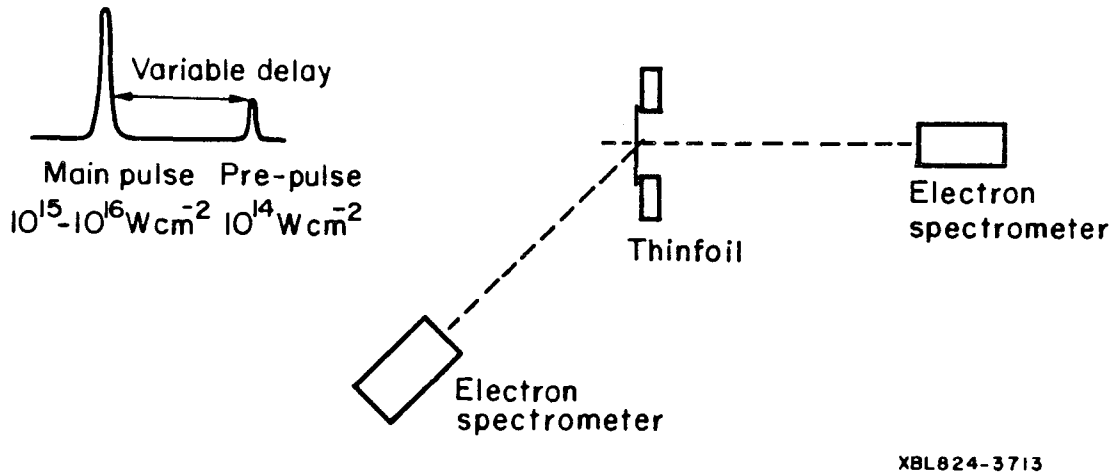


Figure 4. An experiment for the BWA concept. Scaling of maximum electron energy and temperature of the heated electrons with $\omega_p$ and $v_o/c$ and $T_e$

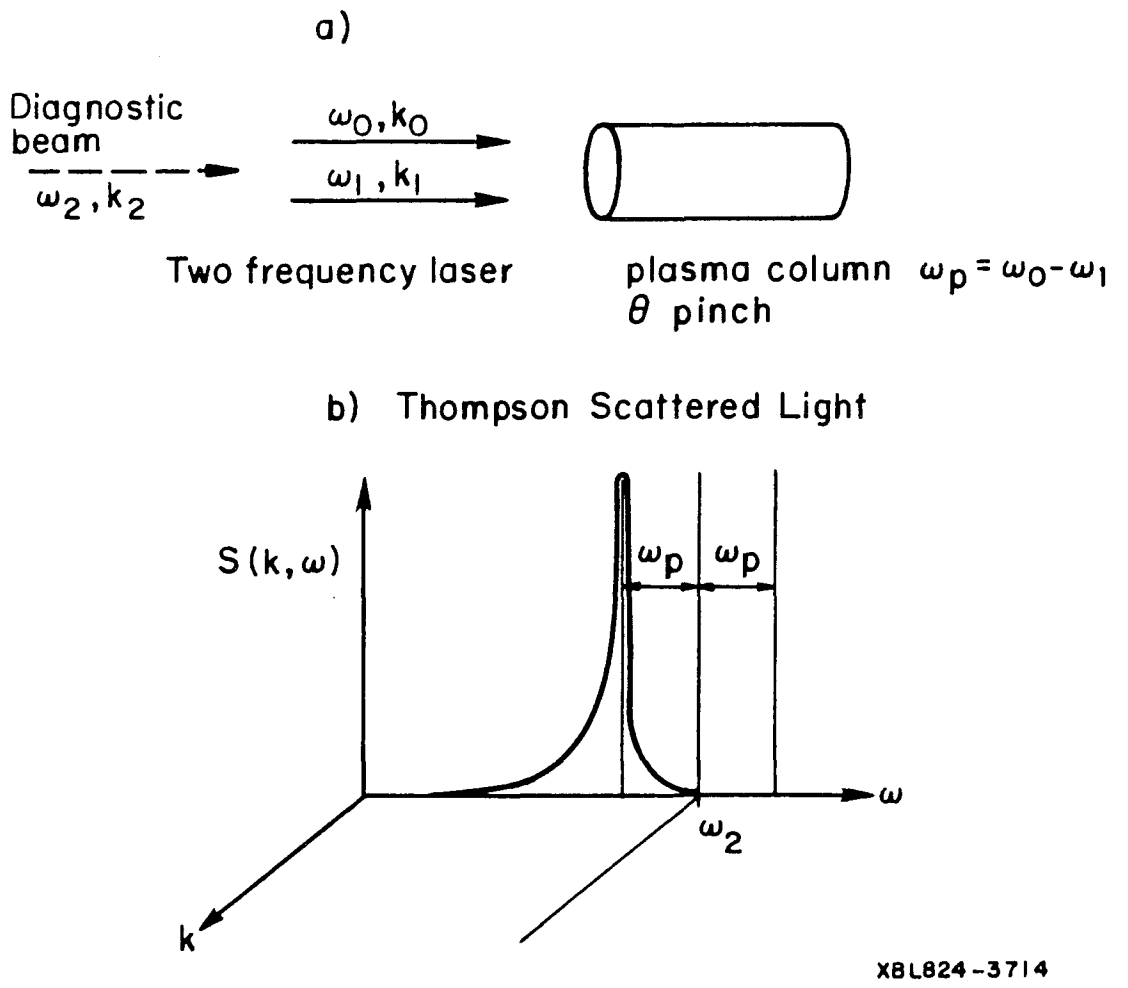


Figure 5. An experiment on the beating of waves as needed for the BWA. From the Fourier transform function, $S(k,\omega)$, of the Thompson scattered light one determines $\omega$, hence $n(k,\omega)/n_0$, and therefore, $E_p(\omega p)$. The experimental set-up is shown in Fig. 5a, and the scattered light is shown in Fig. 5b.