LBL-14640
c.2

Lawrence Berkeley Laboratory

UNIVERSITY OF CALIFORNIA

RECEIVED
LAWRENCE
BERKELEY LABORATORY
FEB 9 1983
LIBRARY AND
DOCUMENTS SECTION

Accelerator & Fusion Research Division

Presented at the 7th Conference on the Application of Accelerators in Research and Industry, Denton, TX, November 8-10, 1982

VANE COUPLING RINGS: A SIMPLE TECHNIQUE FOR STABILIZING A FOUR-VANE RADIOFREQUENCY QUADRUPOLE STRUCTURE

D. Howard and H. Lancaster

November 1982

TWO-WEEK LOAN COPY

This is a Library Circulating Copy which may be borrowed for two weeks. For a personal retention copy, call Tech. Info. Division, Ext. 6782.

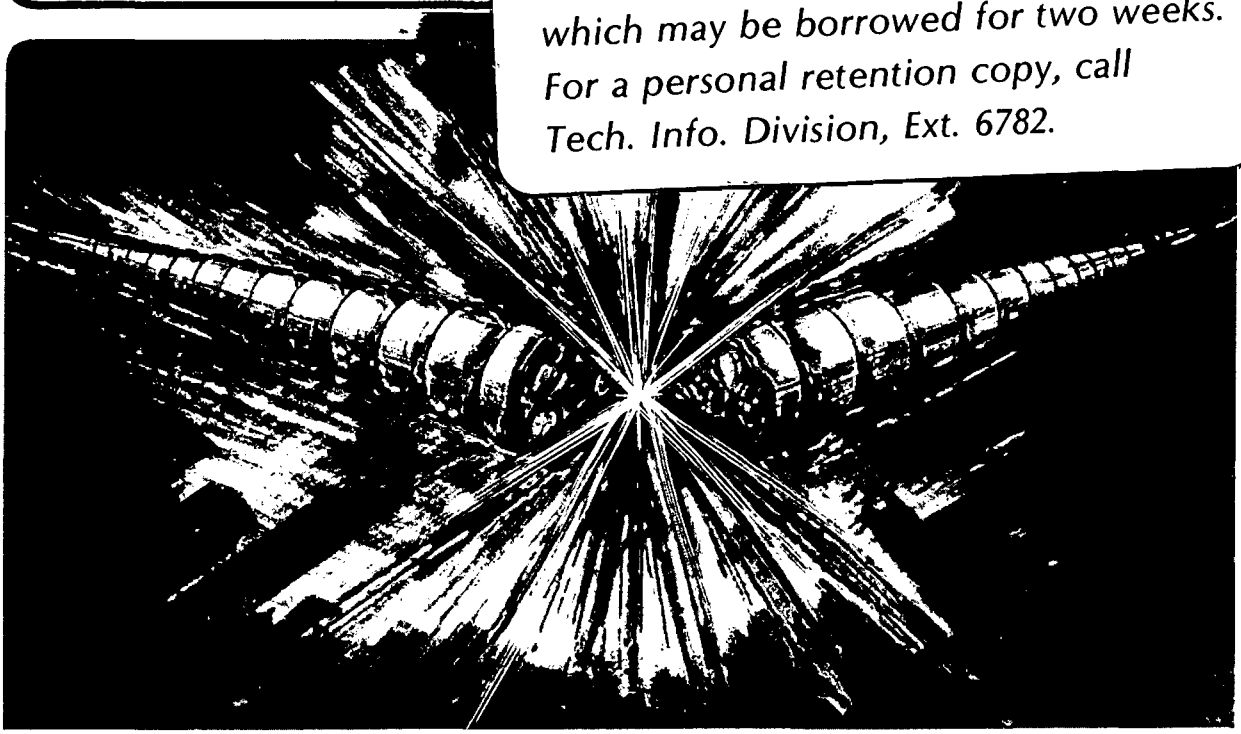

Prepared for the U.S. Department of Energy under Contract DE-AC03-76SF00098

LBL-14640
c.2

DISCLAIMER

This document was prepared as an account of work sponsored by the United States Government. While this document is believed to contain correct information, neither the United States Government nor any agency thereof, nor the Regents of the University of California, nor any of their employees, makes any warranty, express or implied, or assumes any legal responsibility for the accuracy, completeness, or usefulness of any information, apparatus, product, or process disclosed, or represents that its use would not infringe privately owned rights. Reference herein to any specific commercial product, process, or service by its trade name, trademark, manufacturer, or otherwise, does not necessarily constitute or imply its endorsement, recommendation, or favoring by the United States Government or any agency thereof, or the Regents of the University of California. The views and opinions of authors expressed herein do not necessarily state or reflect those of the United States Government or any agency thereof or the Regents of the University of California.

LBL-14640

VANE COUPLING RINGS: A SIMPLE TECHNIQUE FOR STABILIZING A FOUR-VANE RADIOFREQUENCY QUADRUPOLE STRUCTURE*

D. Howard and H. Lancaster
Lawrence Berkeley Laboratory, University of California, Berkeley, California 94720

Abstract

The benefits of stabilized accelerating structures, with regard to the manufacture and operation, have been well documented. The four-vane radiofrequency quadrupoles (RFQ) presently being designed and constructed in many laboratories are not stabilized because of the weak electromagnetic coupling between the quadrant resonators. This paper presents a simple technique developed at the Lawrence Berkeley Laboratory using vane coupling rings (VCR's) which azimuthally stabilize the RFQ structure and greatly enhance its use as a practical accelerator. In particular, the VCR's:

- o Completely eliminate the dipole modes in the frequency range of interest;
- o Provide adequate quadrant balance with an initial precision mechanical alignment of the vanes;
- o Enhance axial balance and simplify end tuners.

Experimental verification tests on a scale model will be discussed.

Introduction

The radiofrequency quadrupole accelerating structure is an attractive solution for the acceleration of low velocity ions. It's ±180° longitudinal acceptance and small size plus the elimination of very high voltage columns and power supplies have made it very popular for new projects. The four-vane RFQ type utilizing a TE_{210} quadrupole mode resonance is the one used in most designs. At the Lawrence Berkeley Laboratory, an RFQ of the four-vane type is being fabricated to accelerate heavy ions up to Si^{4+} as part of a Bevalac injector upgrade project[1].

Early in the design process, an analytical study showed the extreme frequency sensitivity to expected dimensional errors.[2] (The small bore required for heavy ion use aggravated this problem.) Because of the very weak coupling between quadrant resonators, this sensitivity manifested itself as a large imbalance between quadrant fields when model tests began.

The model tests also quickly pointed out two other major problems, one inherent to the four-vane structure, the second with the tuning operation. The first problem is the dipole modes (TE_{110}) which exist near the quadrupole mode and cause serious longitudinal variations in the fields. The second is the task of adjusting four heavy vanes and eight end tuners, all of which interactively affect the quadrant balance, the dipole modes, the frequency, and the longitudinal field distribution.

The purpose of this paper is to describe a simple addition to the structure which solves many of these problems and enhances the viability of the four-vane RFQ.

Vane Coupling Rings (VCR's)[3]

The desired resonant mode, the quadrupole (TE_{210}) mode, is characterized azimuthly by the diametrically opposed vane tips having the same voltage and polarity. The two undesirable dipole modes (TE_{110}) have opposite polarity voltages on at least two of the diametrically opposed vanes. With this in mind, it is clear that a zero impedance electrical connection between diametrically opposite vane tips will preserve the quadrupole mode and eliminate the dipole modes. Further analysis indicated this connection would give very strong coupling between the quadrants of the four-vane RFQ, a most important factor in stabilizing the RFQ.

The VCR's are a practical implementation of this idea. Performance with this solution is discussed below. (Also see Figures 1 and 2.)

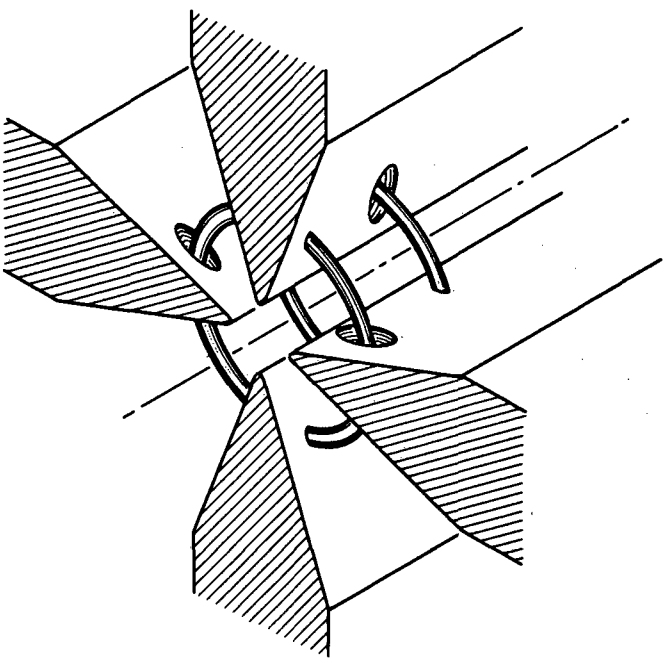

Figure 1 (XBL 8211-3243)

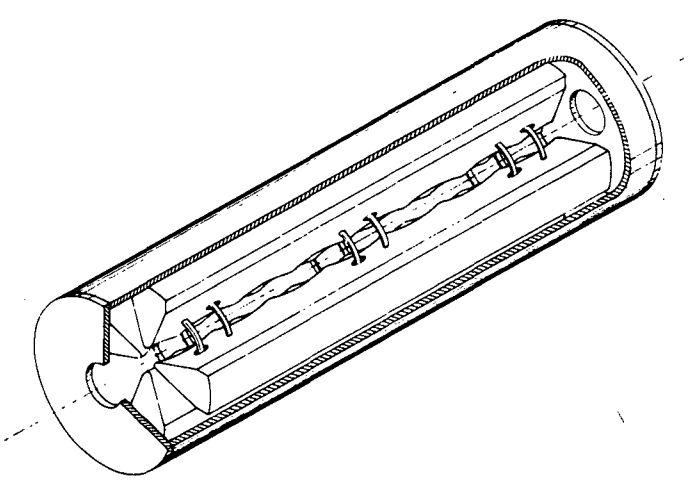

Figure 2 (XBL 825-10125)

*This work was supported by the Director, Office of Energy Research, Office of High Energy and Nuclear Physics, Nuclear Science Division, U.S. Dept. of Energy under Contract No. DE-AC03-76SF00098.

Mode Frequency Shifts

The quadrupole modes (TE_{21n}) are in principle not affected by this technique. The VCR's, however, effectively add capacity to the vane tips and thus lower the frequencies by a few percent.

The dipole modes (TE_{11n}) are strongly affected by the VCR's depending on the number and longitudinal placement of the ring pairs. As an example, if the VCR's are placed at the voltage nulls of a mode, they will have no effect.

Our experience is that three ring pairs eliminate the TE_{110} dipole mode from the frequency range of interest.

Azimuthal Stabilization

Azimuthal stabilization is one of the most dramatic effects of the VCR's. It is the weak coupling between quadrants which greatly aggravates the tuning procedure. Three ring pairs will increase the coupling by more than an order of magnitude.

Effect on Axial Balance

Tests indicate an improvement in axial balance with the VCR's installed. Although it is not apparent in principle why this should happen, we attribute this to two effects: the correction of azimuthal balance with strong quadrant coupling enhances the axial balance, and the VCR's placed near the vane ends make a better end termination.

Further analysis of these effects is being undertaken to explain the test results. With the VCR's installed, the RFQ structure behaves axially with predictable tilts to local frequency perturbations much like an Alvarez structure.

End Tuner Simplification

With the VCR's in place giving good quadrant balance and mode separation, it is necessary to have only one disc-type tuner for each end. The VCR's placed as close as possible to the vane ends make the vane end cut-back angle and distance to the end wall have a less sensitive effect on axial balance.[4]

Because of higher coupling between quadrants, it is no longer necessary to move the vanes as part of the tuning process.[4]

Frequency Tuning Apparatus

Because the RFQ will generally be part of a chain of accelerating structures, it is necessary to tune the overall frequency automatically. The VCR's provide such good quadrant-to-quadrant coupling that a simple plunger or loop tuner in one quadrant can accomplish this task.

TE_{210} Frequency Shift

The frequency of the fundamental RFQ mode is shifted by a few percent to a lower value by the VCR's. This shift is caused by the equivalent increase in vane tip capacity.

A VCR passing through a vane forms an approximate coaxial capacitor with end effects. Adding all of these capacitors for a quadrant and dividing by the vane length gives the equivalent increase in vane tip capacity, c_R.

The new RFQ frequency can be calculated by using the following equation:[5]

$$\omega(c+c_R)r_i\phi_0 n(N_{1i}J_{1L}-J_{1i}N_{1L})+(N_{0i}J_{iL}-J_{0i}N_{1L}) = 0$$

where $c = 16.5$ pF/meter,

$r_i = 1.25r_0$,

$r_L = R_L - 0.965r_0$,

r_0 = average bore radius

R_L = inner radius of the RFQ cylinder,

$\phi_0 = \pi/3$,

$n = \sqrt{\mu_0/\epsilon_0}$,

$J_{0i} = J_0(kr_i)$,

$N_{1L} = N_1(kr_L)$,

and $k = 2\pi/\lambda$.

The equation is for simple vanes with straight sides. If the vanes are not simple, set $c_R = 0$ and adjust r_L in the equation until the frequency agrees with the calculated frequency without VCR's. Using this r_L, the new frequency can be obtained.

Voltage Holding Considerations[6]

It is important that the VCR's not be the limiting factor for voltage holding in the RFQ. At present, the point of maximum electric field in the RFQ is between adjacent vanes at their closest proximity, near the tips. The electric field at this point is given by:

$$E_{max}(\text{vane}) = 1.36\ V/r_0 \cong \epsilon V/2r_0$$

where V = vane tip voltage,

r_0 = bore radius, and

$\epsilon = 2.718$.

The maximum electric field on the VCR's occurs on the ring at the center of the vane through which the ring passes. This is true if the ratio $D/R \leq 100$ (see Figure 3).

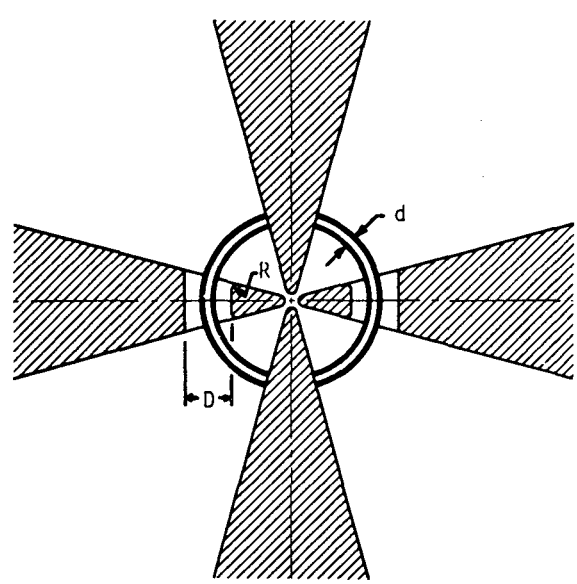

Figure 3 (XBL 825-10125)

The optimum ratio of diameters for voltage holding is:

$$D/d = \varepsilon.$$

If we take a factor of safety n, where

$$n = E_{max}(\text{vane})/E_{max}(\text{ring}),$$

between fields at the vane and ring, the ring-hole dimensions become:

$$D = 4nr_0,$$

$$d = 4nr_0/\varepsilon.$$

VCR Currents Due to Quadrant Unbalance[7]

When two quadrants have resonant frequencies that are different because of mechanical tolerances, there will be currents that flow in the VCR's.

Consider two quadrants tuned to different frequencies, ω_0 and $\omega_0 + \Delta\omega$, and assume they can be represented by the lumped circuits shown in Figure 4.

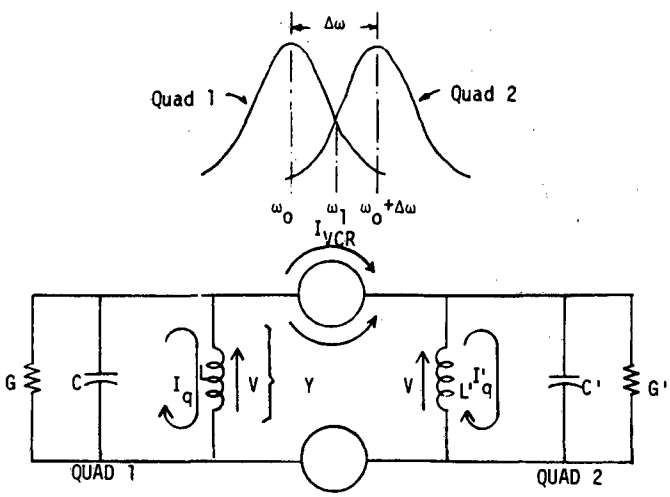

Figure 4 (XBL 8210-2342)

The VCR's will force the two quadrants to resonate at a new frequency,

$$\omega_1 = \omega_0 + \Delta\omega/2.$$

The reactive current flow through the rings when this is accomplished will be

$$I_{VCR} \cong J_r \ell(\Delta\omega/\omega_0)/2N,$$

where J_r = current density at ring radius,

ℓ = length of RFQ,

and N = number of ring pairs.

Although the actual current flow in all four quadrants is more complicated than the simple circuit shown in Figure 4, the impression is that the reactive current due to alignment errors and tuning is small. For our design, the calculated current was less than 1 amp per half-power bandwidth frequency difference.

Radial VCR Position

To obtain maximum coupling and minimize VCR impedance, it is desirable to place the rings as close to the vane tips as possible. There are limitations, however, imposed by bore field perturbations and voltage holding considerations.

In our case, the edge of the hole through the vane was taken to be about ten times r_0. Simulations and model tests indicate this has a less than one percent effect on the bore field.

Model Test Results

To test the performance of the VCR's before they were designed into the full-scale heavy ion RFQ, the rings were installed in a one-half scale model. The results summarized here for three installed ring pairs were incorporated in the design philosophy of the RFQ.

- The fundamental quadrupole mode frequency was lowered from 371 MHz to 363 MHz.
- The fundamental dipole modes were shifted higher in frequency by >100 MHz. In our tests we could not find them after the VCR's were installed.
- The azimuthal balance was less than ±5 percent after a precision mechanical alignment of the vanes. No movement of the vanes for electrical balance was required. The coupling between quadrants was increased by a factor of 25-50.
- Axial balance sufficient for beam dynamics requirements was obtained by changing the cut-back angle (area) on the vane ends and by moving the end wall.
- A tuning loop placed half-way between ends in one quadrant shifted the overall RFQ frequency by 300 kHz without noticeably affecting the axial or azimuthal balance.
- After adequate axial balance was obtained, vane length tuning bars were inserted in all four quadrants, raising the RFQ frequency by 8 MHz without noticeably affecting the balance.
- All tests were done with one drive loop in one quadrant.

References

1. "RFQ Development at LBL," S. Abbott et al. Paper to be presented at this conference. Also Lawrence Berkeley Laboratory Report No. LBL-14624.

2. "An Analytical Solution for the Electrical Properties of a Radio-Frequency Quadrupole (RFQ) with Simple Vanes," H. Lancaster, Proc. of the 1981 Linear Accelerator Conference Held at Bishop's Lodge, Santa Fe, New Mexico, October 19-23, 1981, LA-9234-C, UC-28, February 1982. Also Lawrence Berkeley Laboratory Report No. LBL-13009.

3. "Stabilized Radio-Frequency Quadrupole", H. Lancaster, J. Fugitt, and D. Howard. U.S. patent application filed by D.O.E.

4. "RFQ Test Results", D. Howard, Medical Accelerator Note No. 31, June 1982.

5. "The RFQ Frequency Equation: Augmented to Include Vane Tip Capacity", H. Lancaster and D. Brodzik, Medical Accelerator Note No. 37, September 1982.

6. "RFQ Vane Coupling Ring (VCR) Voltage Holding Considerations", H. Lancaster, Medical Accelerator Note No. 34, July 1982.

7. "Current in Vane Coupling Rings (VCR's) Due to RFQ Quadrant Tuning Errors," H. Lancaster, Medical Accelerator Note No. 35, August 1982.

This report was done with support from the Department of Energy. Any conclusions or opinions expressed in this report represent solely those of the author(s) and not necessarily those of The Regents of the University of California, the Lawrence Berkeley Laboratory or the Department of Energy.

Reference to a company or product name does not imply approval or recommendation of the product by the University of California or the U.S. Department of Energy to the exclusion of others that may be suitable.

TECHNICAL INFORMATION DEPARTMENT
LAWRENCE BERKELEY LABORATORY
UNIVERSITY OF CALIFORNIA
BERKELEY, CALIFORNIA 94720