LBL-14646
Preprint

Lawrence Berkeley Laboratory

UNIVERSITY OF CALIFORNIA

RECEIVED
LAWRENCE
BERKELEY LABORATORY
JUL 2 1982
LIBRARY AND
DOCUMENTS SECTION

CHEMICAL BIODYNAMICS DIVISION

Submitted for publication to Review of Scientific Instruments

A SINGLE-PHOTON TIMING SYSTEM FOR PICOSECOND FLUORESCENCE LIFETIME MEASUREMENTS

Bojan T. Turko, John A. Nairn,
and Kenneth Sauer

June 1982

TWO-WEEK LOAN COPY

This is a Library Circulating Copy which may be borrowed for two weeks. For a personal retention copy, call Tech. Info. Division, Ext. 6782.

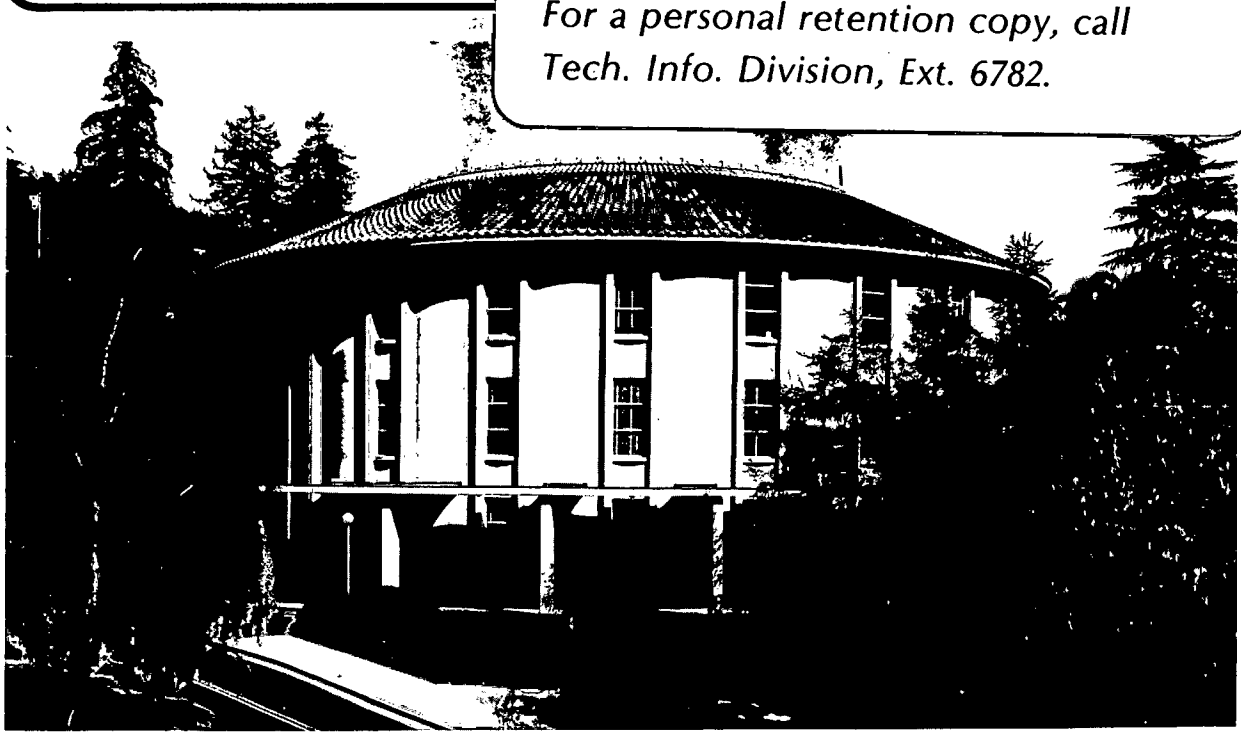

LBL-14646 c.2

Prepared for the U.S. Department of Energy under Contract DE-AC03-76SF00098

DISCLAIMER

This document was prepared as an account of work sponsored by the United States Government. While this document is believed to contain correct information, neither the United States Government nor any agency thereof, nor the Regents of the University of California, nor any of their employees, makes any warranty, express or implied, or assumes any legal responsibility for the accuracy, completeness, or usefulness of any information, apparatus, product, or process disclosed, or represents that its use would not infringe privately owned rights. Reference herein to any specific commercial product, process, or service by its trade name, trademark, manufacturer, or otherwise, does not necessarily constitute or imply its endorsement, recommendation, or favoring by the United States Government or any agency thereof, or the Regents of the University of California. The views and opinions of authors expressed herein do not necessarily state or reflect those of the United States Government or any agency thereof or the Regents of the University of California.

LBL-14646

A SINGLE-PHOTON TIMING SYSTEM FOR PICOSECOND FLUORESCENCE LIFETIME MEASUREMENTS

Bojan T. Turko[1], John A. Nairn[*2], and Kenneth Sauer[2]

(1) Engineering and Technical Services Division, and (2) Chemical Biodynamics Division, Lawrence Berkeley Laboratory, and Department of Chemistry, University of California, Berkeley, CA 94720

[*]Present address: E. I. DuPont de Nemours and Co., Inc. Central Research and Development Dept., Experimental Station, Wilmington, DE 19898

This work was supported by the U.S. Department of Energy under Contract Number DE-AC03-76SF00098.

ABSTRACT

A single-photon timing system is described which is capable of resolving fluorescence lifetimes as short as 25 ps. The system is an improved version of an earlier apparatus. The new system uses a synchronously pumped, mode-locked dye laser with 10 ps pulses operating at 82 MHz repetition rate. A fast photodetector and a leading-edge discriminator were developed to use with this light source. Also, a special rate reduction circuit was built to eliminate large oscillations in fluorescence decay spectra due to the excessive stop rates that overload commercial time-to-amplitude converters.

INTRODUCTION

The single-photon system described in this article was set up to study the very fast fluorescence decay kinetics present in photosynthetic systems.[1,2] The new system is a modification of our previous single-photon timing system[3,4] to include a synchronously pumped mode-locked dye laser. The output pulses of this laser have a full-width half maximum (FWHM) of about 10 ps; with these pulses we can push single-photon timing closer to the limit of its resolution capabilities. The new system is capable of resolving fluorescence lifetimes as short as 25 ps.[1]

The fluorescence decay kinetics of spinach chloroplasts at room temperature can be characterized by three exponentials. A typical decay (see Fig. 1) is comprised of a slow component of 1 or 2 ns and two faster components of 350 to 750 ps and 50 to 100 ps, respectively. The exact value of each component and the relative yields depend on the condition of the chloroplasts.[1,2]

To achieve the high resolution required by the fastest portion of the decay kinetics, each system component had to be optimized and its contribution regarding noise and time drift evaluated. A particular problem discussed in this paper is the elimination of oscillations in the measured fluorescence decay (see Fig. 2) which were present in early versions of the system. These oscillations were due to the very high repetition rate (82 MHz) of the laser pulse. A special discriminator and circuits for elimination of these oscillations were built. These modifications eliminated the need to employ an expensive cavity dumper normally used to decrease laser pulse rates.

The major components of this single-photon timing system are the pulsed laser light sources, the fluorescence detection and the excitation

pulse reference channels, the photodetectors, the analog signal processing electronics (photodetector pulse discrimination, time-to-amplitude conversion and amplitude-to-digital conversion) and the digital processor. The new components, their characteristics and the problems inherent in picosecond fluorescence lifetime measurement applications are discussed in this paper.

I. SYSTEM DESCRIPTION

This new system evolved from an earlier single-photon detection apparatus.[3,4] Introduction of the synchronously pumped, mode-locked dye laser with its high repetition, picosecond light pulses called for some modifications of existing photodetection channels. Major additions described below were the design of new photodetector circuitry, a fast discriminator, and a new rate reduction circuit. The rate reduction curcuit was required to eliminate oscillations in the measured fluorescence decay.

A block diagram of the system is shown in Fig. 3. The light source consists of a Spectra Physics SP 171 argon ion laser mode-locked with a Spectra Physics SP 362 Ultrastable Mode Locker driving an acousto-optical mode-locking crystal. A modified Spectra Physics SP 375 dye laser, pumped by the mode-locked argon laser, produces light pulses of 10 ps FWHM[1] at an 82 MHz repetition rate.

The laser pulses illuminate samples in the single-photon detection apparatus.[3,4] An RCA C31034A photomultiplier detects the fluorescence photons. The constant fraction discriminator[4] shapes the single photon pulses generated by the photomultiplier. The original constant fraction discriminator needed no modification. A fast diode photodetector picks up

the excitation light from a beam splitter, producing subnanosecond pulses at a repetition rate of 82 MHz. A tunnel diode leading edge discriminator shapes the diode photodetector output into a series of uniform, 4 ns-wide standard NIM pulses.

Conventional single-photon timing systems start a voltage ramp in the time-to-amplitude converter (TAC) upon each excitation pulse and stop the voltage ramp when a fluorescence photon is detected.[5] Because the 82 MHz repetition rate of the laser pulse is too high for the TAC to trigger a ramp on each pulse, we have adopted a reverse single-photon timing scheme. We start the TAC with the output of the constant fraction discriminator (fluorescence photon) and stop the TAC with the next pulse from the fast discriminator i.e., with the next laser pulse. However, the very high stop rates present at the TAC input resulted in poor performance of two different commercial time-to-amplitude converters. A rate reduction circuit was built to eliminate this problem. This rate reducer gates out all of the stop pulses except the one immediately following the fluorescence photon start pulse. The converter thus never gets a stop pulse before the start pulse is first accepted. Normally, this will result in oscillation free performance of the TAC.

The proper timing of the inputs to the TAC can be adjusted by individual variable delay lines. The amplitude of the TAC's output is proportional to the time interval for the start-stop pulse pair at its inputs. The next three blocks in Fig. 3 are a 1024 channel amplitude-to-digital converter, a multichannel pulse height analyzer (Northern Scientific Model NS622) and a NA 636 digital signal analyzer. The analyzer is interfaced with a computing system (VAX 11/780). The description of the numerical analysis of the data is given in Ref. 1.

II. FAST DISCRIMINATOR

The 82 MHz light pulse is brought onto a fast photodector by a beam splitter. The detector is a Texas Instruments TIED photodiode that has been mounted in a fashion similar to that described by Steinmetz.[6] The typical diode output is +2.5V pulses of 0.5 ns FWHM into a 50 ohm load at the input of a sampling oscilloscope. The diode bias is +160V.

A fast tunnel diode discriminator was built and directly attached as an extension of the detector output connector. The losses and problems associated with transmission of such short pulses by a cable between the photodiode and a remote discriminator are thus eliminated. The discriminator circuit is shown in Fig. 4. The photodiode-generated current pulses add to the tunnel diode bias. The tunnel diode fires when its 10 mA current peak is exceeded. The voltage level across the tunnel diode is sensed by a fast-switching transistor pair. The load on the tunnel diode otherwise caused by the pair is decoupled by a small choke (L1, two turns, 3 mm in diameter, made of bus wire). A small inductor (L1, two turns, 3 mm in diameter) decreases the tunnel diode loading by the switching pair. Another choke (L2) in series with L1 defines the pulse width generated by the discriminator. The value of L2 is selected experimentally to give a pulse width of about 4 ns, after which the tunnel diode flips back to its lower state. Sufficient time is then left for the discriminator to recover before the next pulse, which occurs 12 ns later. The discriminator threshold can be adjusted with a potentiometer which changes the tunnel diode bias. The output of the mode-locked dye laser can vary due to a change in the alignment. The discriminator threshold level should be adjusted so as to accommodate variations in the photodetector output.

The signal from the collector of the switching pair is translated into a negative current pulse at the discriminator output by a fast P-N-P transistor. A very short propagation delay is thus achieved. It is important to keep any drift of this propagation delay at a minimum. Poor tracking would cause an output drift in the time-to-amplitude converter. This drift is negligible if the time for taking a typical fluorescence decay spectrum is kept reasonably short.

Time jitter of the discriminator is difficult to separate from the jitter contributed by the laser and the photodetector. The overall jitter of the time between two adjacent laser pulses was estimated to be less than 5 ps.

III. RATE REDUCER

In conventional single-photon systems time-to-amplitude converter inputs are normally controlled directly by the discriminators. In our case, the discriminator outputs are as follows: a single-photon start rate usually less than 20 kHz and an extremely high stop rate of 82 MHz. Two different TACs were tried (ORTEC, Inc. Model 457 Biased Time-To-Pulse-Height Converter and Canberra Industries, Inc. Model 2043 Time Analyzer). Both converters show large oscillations in the measured fluorescence decay curve (F(t) in Fig. 2). The period of the oscillation was about 2 ns. Apparently the 82 MHz stop pulse train continually present at the stop input of the TAC interfered with the start input. The crosstalk causes ringing at a frequency of about 500 MHz, which modulates the threshold of the start input. The result is an oscillation in the measured decay profile.

This problem could be minimized in some cases by shifting the start and stop pulses from one another by a fixed delay and away from the crosstalk region. However, this was not possible in this case because the separation between the stop pulse is only 12 ns, limiting the useful time range to less than 10 ns.

A stop rate reduction circuit was built (Fig. 5), which gates out all of the stop pulses prior to the arrival of the single-photon pulse from the constant-fraction discriminator. The reducer is placed between the discriminators and the TAC (Fig. 3). Each photon pulse from the constant-fraction discriminator then first starts the rate reducer and is passed on, after a small system delay, to the start input of the TAC. A latch is set in the reducer by the same start pulse, opening a gate which then passes the next stop pulse from the fast discriminator to the stop input of the TAC. The stop output internally clears the latch and also paralyzes the start input gate for a period of about 100 ns. This prevents any new output from the rate reducer during that period. Only one stop is thus generated after each single-photon count, eliminating crosstalk in the TAC. The oscillations in the fluorescence decay spectrum are thus virtually eliminated (Fig. 1).

As an alternative operation, the constant-fraction discriminator can be used for driving both the start of the TAC and the rate reducer. The reducer drives the stop of the TAC as before. Some crosstalk that may be otherwise caused by the reducer is thus eliminated. Propagation delays of the start and stop pulses through the rate reducer circuit are matched, and their thermal tracking is very good.

The Canberra Model 2043 Time Analyzer was used because of the shorter deadtime (permitting higher processing rates) and superior immunity to

crosstalk oscillations. The analyzer had to be modified slightly. A bias circuit was added which subtracts a pedestal from the analog output signal. The amount of this offset is adjustable with a helipot and covers about half of the output pulse height range. Only the desired portion of the time range is thus brought to the ADC and analyzed. Also, a 5-stop attenuator between the TC and ADC was used for the change of gain (i.e., time calibration) of the overall time-to-digital conversion.

IV. CONCLUSION

Our picosecond fluorimeter has been used extensively to study fluorescence decay kinetics in photosynthetic systems.[1,2] A typical result from spinach chloroplasts is shown in Fig. 1. Oscillation-free performance is possible only by using some form of rate reduction. We have reduced the rate of discriminator pulses reaching the TAC and thus were able to avoid the necessity of reducing the laser pulse rate with a cavity dumper.

In Fig. 1, F(t) is the measured fluorescence decay curve upon which the smooth three-exponential best fit is superimposed. The lifetime (τ_1) and relative yield (ϕ_1) of the shortest component are 100 ps and 10% respectively. This component was not resolved in previous single-photon timing studies.

The lower curves are the deviations between the best two- and three-exponential fits and the measured fluorescence data. The random-noise character of the bottom deviation plot could not be obtained even with a larger number of exponential decay components if system oscillations were present in the measured fluorescence decay response.

ACKNOWLEDGEMENTS

We wish to thank B. Leskovar for advice in the initial stages and Dr. Kerry K. Karukstis for helpful discussions and for her careful reading of the manuscript. This work was done in the Laboratory of Chemical Biodynamics and the Electronics Research and Development Group of the Lawrence Berkeley Laboratory, and was supported by the U.S. Department of Energy under Contract No. DE-AC03-76SF00098. Reference to a company or product name does not imply approval or recommendation of the product by the University or the U.S. Department of Energy to the exclusion of others that may be available.

1 J.A. Nairn, Orientation and Energy Transfer Studies on Chlorophyll in the Photosynthetic Membrane, Doctoral Thesis, University of California, Berkeley 1981. LBL Report 13827.

2 W.A. Haehnel, J.A. Nairn, P. Reisberg, and K. Sauer, Biochim.Biophys. Acta, 680, 161 (1982).

3 P.R. Hartig, K. Sauer, C.C. Lo, and B. Leskovar, Rev. Sci. Instum. 47, 1122 (1976).

4 B. Leskovar, C.C. Lo, P.R. Hartig, and K. Sauer, Rev. Sci. Instrum. 47, 1113 (1976).

5 W.R. Ware, in The Creation and Detection of the Excited State (A.A. Lamola, ed.), Vol. 1A, 213 (1971).

6 L.L. Steinmetz, Rev. Sci. Instrum. 50, 582 (1979).

7 G.S. Beddard, G.R. Fleming, G. Porter, G.F.W. Searle, and J.A. Synoviec, Biochim. Biophys. Acta 545, 65 (1979).

VII. FIGURE LEGENDS

Fig. 1. Typical experimental fluorescence decay data (of spinach chloroplasts) measured by the system. E(T) is the excitation profile (310 ps FWHM), F(t) is the fluorescence decay curve (with the best three-exponential fit superimposed). The lifetimes, τ, and yields, ϕ, of the three components are specified. The lower curves are differenes between the two- and three-exponential fits and the fluorescence data.

Fig. 2. Fluorescence decay curve showing oscillation due to high stop rate interference in the time-to-digital converter.

Fig. 3. Picosecond fluorescence lifetime system block diagram.

Fig. 4. Fast photodetector and tunnel diode discriminator circuit diagram.

Fig. 5. Rate reducer circuit diagram.

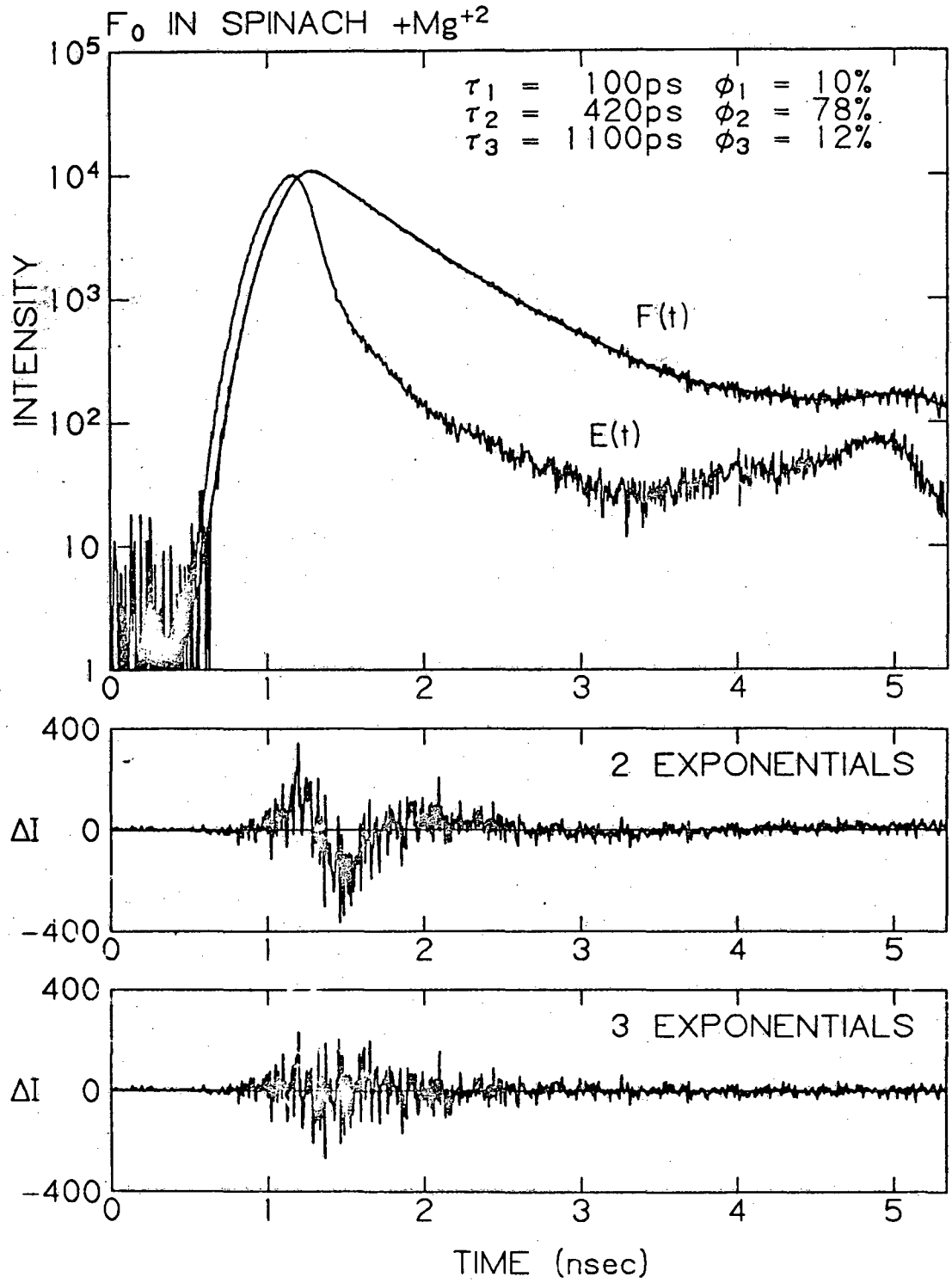

XBL 811-4430

Fig. 1
Turko et al.

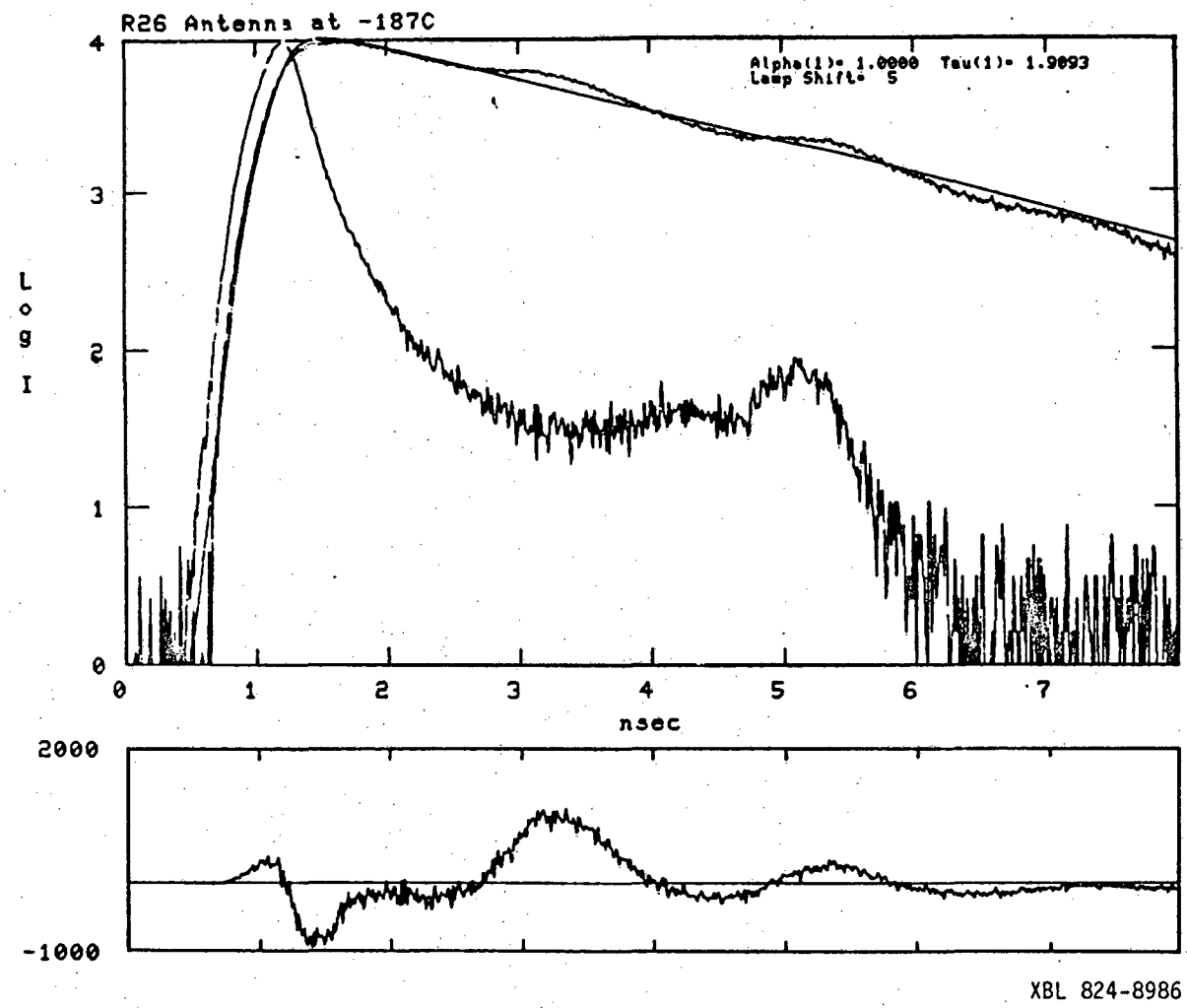

Fig. 2
Turko et al.

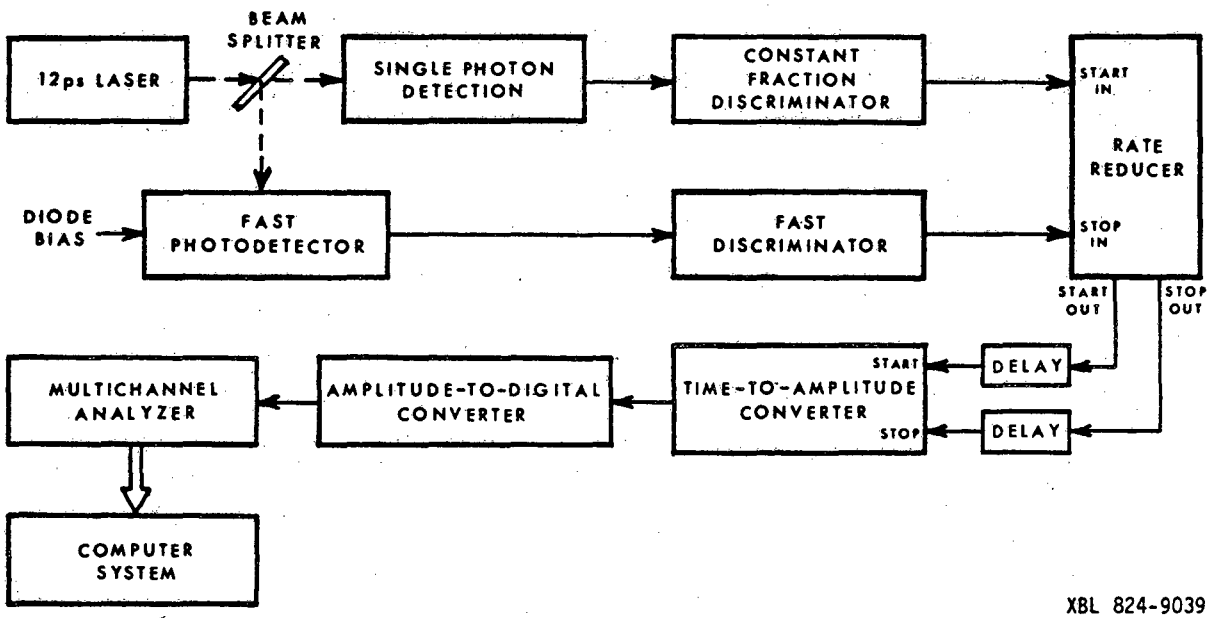

Fig. 3
Turko et al.

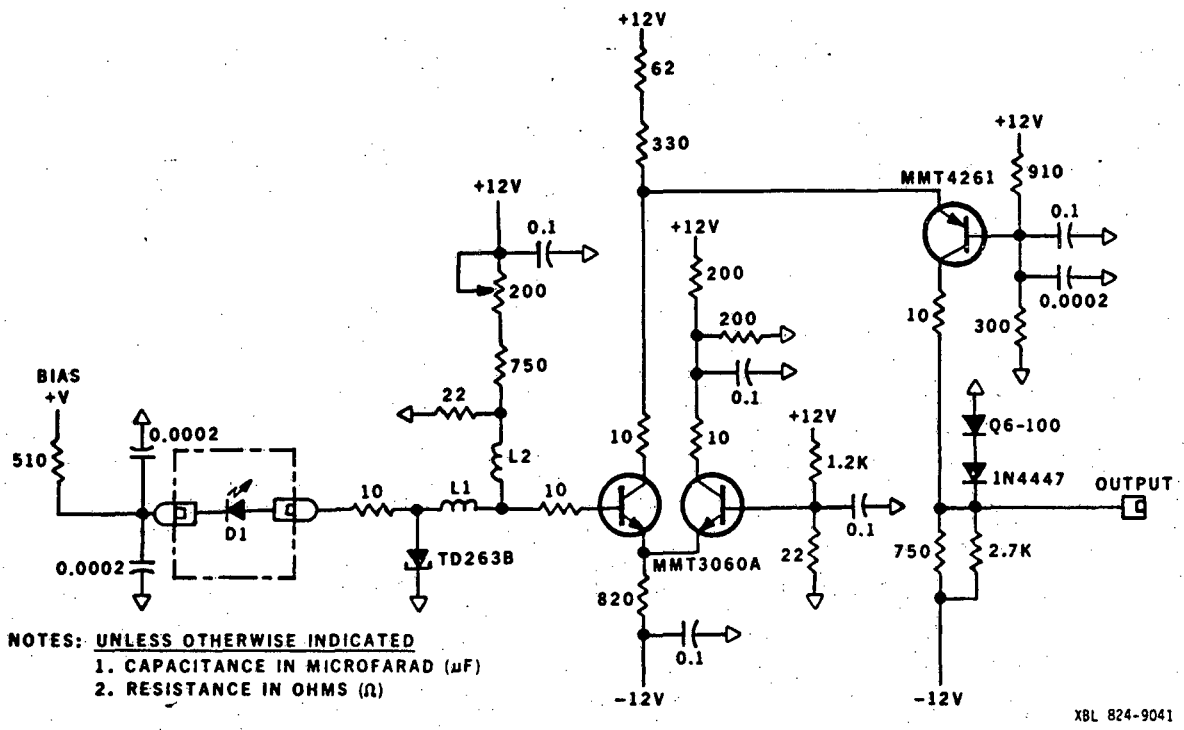

Fig. 4
Turko et al.

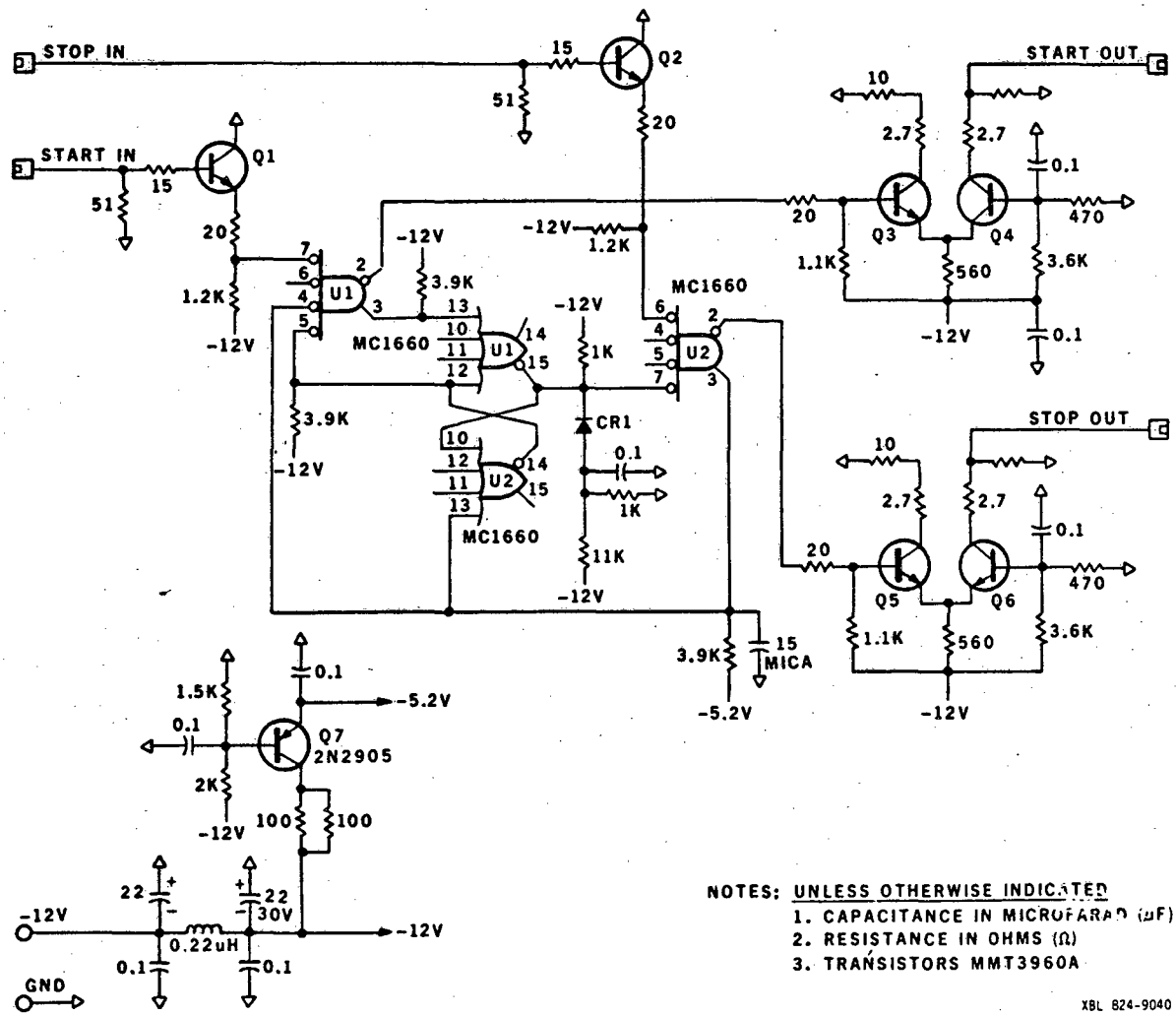

Fig. 5
Turko et al.

This report was done with support from the Department of Energy. Any conclusions or opinions expressed in this report represent solely those of the author(s) and not necessarily those of The Regents of the University of California, the Lawrence Berkeley Laboratory or the Department of Energy.

Reference to a company or product name does not imply approval or recommendation of the product by the University of California or the U.S. Department of Energy to the exclusion of others that may be suitable.

TECHNICAL INFORMATION DEPARTMENT
LAWRENCE BERKELEY LABORATORY
UNIVERSITY OF CALIFORNIA
BERKELEY, CALIFORNIA 94720