LBL-14773 c.2

Lawrence Berkeley Laboratory

UNIVERSITY OF CALIFORNIA

RECEIVED
LAWRENCE
BERKELEY LABORATORY

SEP 30 1982

LIBRARY AND
DOCUMENTS SECTION

Accelerator & Fusion Research Division

Presented at the Synchrotron Light Instrumentation Conference, Hamburg, West Germany, August 9-13, 1982

A NEW WIGGLER BEAM LINE FOR SSRL

Egon Hoyer

August 1982

TWO-WEEK LOAN COPY

This is a Library Circulating Copy which may be borrowed for two weeks. For a personal retention copy, call Tech. Info. Division, Ext. 6782.

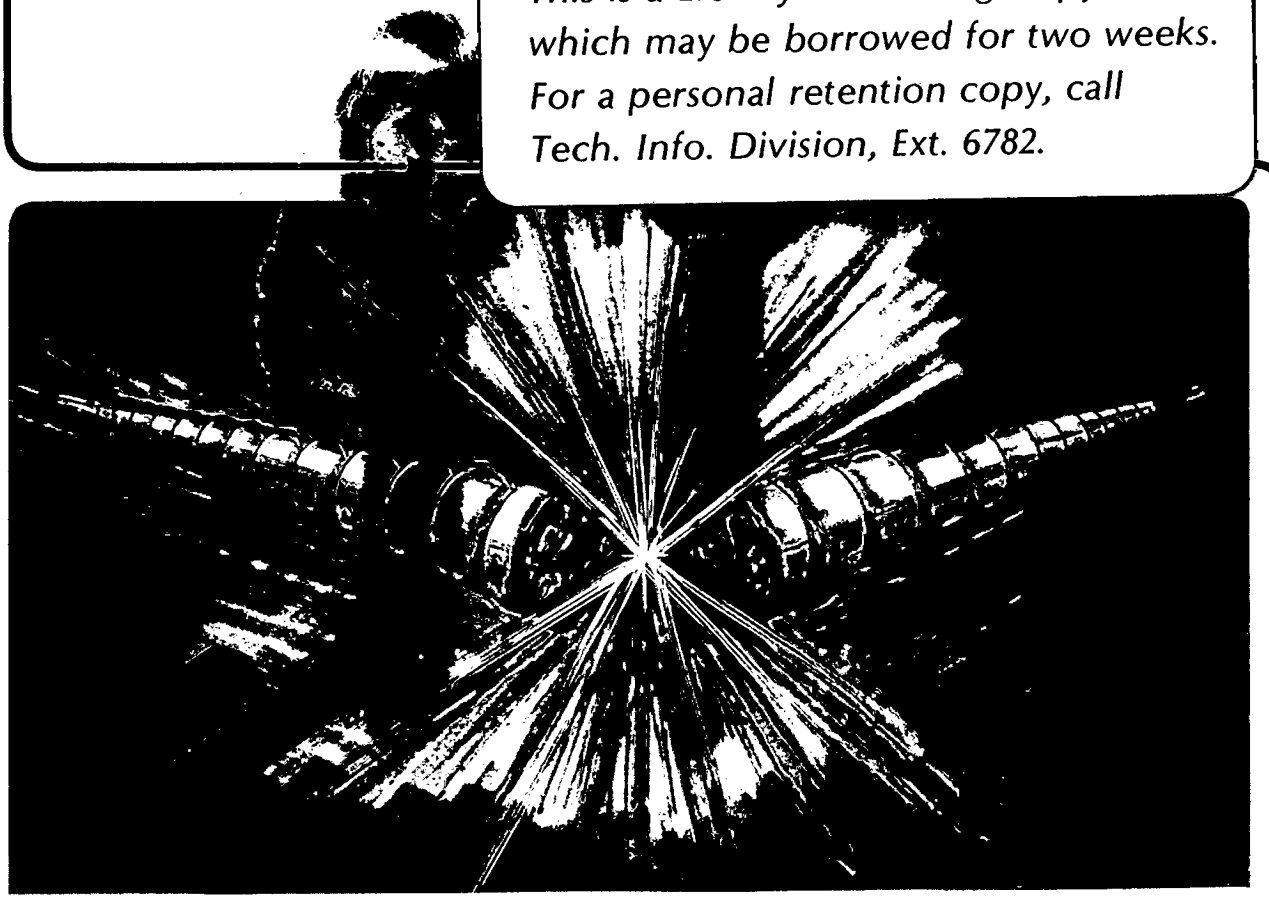

LBL-14773 c.2

Prepared for the U.S. Department of Energy under Contract DE-AC03-76SF00098

DISCLAIMER

This document was prepared as an account of work sponsored by the United States Government. While this document is believed to contain correct information, neither the United States Government nor any agency thereof, nor the Regents of the University of California, nor any of their employees, makes any warranty, express or implied, or assumes any legal responsibility for the accuracy, completeness, or usefulness of any information, apparatus, product, or process disclosed, or represents that its use would not infringe privately owned rights. Reference herein to any specific commercial product, process, or service by its trade name, trademark, manufacturer, or otherwise, does not necessarily constitute or imply its endorsement, recommendation, or favoring by the United States Government or any agency thereof, or the Regents of the University of California. The views and opinions of authors expressed herein do not necessarily state or reflect those of the United States Government or any agency thereof or the Regents of the University of California.

A NEW WIGGLER BEAM LINE FOR SSRL *,** *** ****

Egon Hoyer
Representing the Beam Line VI Design Group+
Lawrence Berkeley Laboratory
University of California
Berkeley, California 94720, USA

Abstract

A new high intensity beam line with a wiggler magnet source is described. This project, in final stages of design, is a joint effort between Lawrence Berkeley Laboratory (LBL), the Exxon Research and Engineering Company (EXXON), and the Stanford Synchrotron Radiation Laboratory (SSRL). Installation at SSRL will begin in the summer of 1982. The goal of this project is to provide extremely high-brightness synchrotron radiation beams over a broad spectral range from 50 eV to 40 keV.

+The Beam Line VI Design Group:
Charles Bahr, Thomas Chan, John Chin, Tom Elioff, Klaus Halbach, Gerald Harnett, Egon Hoyer, David Humphries, Donald Hunt, Kwang-Je Kim, Ted Lauritzen, Dennis Lindle, David Shirley, Robert Tafelski, Albert Thompson
Lawrence Berkeley Laboratory, University of California, Berkeley, California, 94720, USA.

Steven Cramer, Peter Eisenberger, Richard Hewitt, Joachim Stöhr
Exxon Research and Engineering Co., Linden, NJ, 07036, USA.

Richard Boyce, George Brown, Axel Golde, Ron Gould, Nelson Hower, Ingolf Lindau, Herman Winick, John Yang
Stanford Synchrotron Radiation Laboratory, Stanford, California, 94305, USA

John Harris, Benjamin Scott
Stanford Linear Accelerator Center, Stanford, California, 94305, USA.

* LBL work was supported by Department of Energy Research, Contract No. DE-AC03-76SF00098.

** SSRL work was supported by the NSF and the NIH in cooperation with the Department of Energy.

*** SLAC work was supported by the Department of Energy Contract DE-AC03-76SF00515.

**** Exxon work supported by Exxon Research and Engineering Company.

The radiation source is a 27 period (i.e., 55 pole) permanent magnet wiggler of a new design. The wiggler utilizes rare-earth cobalt (REC) material in the steel hybrid configuration to achieve high magnetic fields with short periods. An analysis has been made of the polarization, angular distribution and power density of the radiation produced by the wiggler. Details of the wiggler design are presented. The magnet is outside a thin walled (1mm) variable gap stainless steel vacuum chamber. The chamber gap will be opened to 1.8 cm for beam injection into SPEAR and then closed to 1.0 cm (or less) for operation. Five remotely controlled drives are provided; to change the wiggler gap, to change the vacuum chamber aperture and to position the wiggler.

Details of the beam line optics and end stations are presented. Thermal loading on beam line components is severe. The peak power density at 7.5 m is 5 kW/cm^2 for the nominal wiggler field and present SPEAR beam currents and will approach 20 kW/cm^2 with the maximum wiggler field and projected SPEAR beam currents.

I. Introduction

The development of the Beam Line VI Complex is a joint effort between the Lawrence Berkeley Laboratory (LBL), Exxon Research and Engineering Company (EXXON), and the Stanford Synchrotron Radiation Laboratory (SSRL). The goal of this project is to provide extremely intense synchrotron radiation over a broad spectral range, from 50eV to 40 keV. The radiation source is a 27 period (i.e. 55 pole) permanent magnet wiggler of a new design.

A schematic layout of the Beam Line VI complex is shown in Figure 1. Radiation from the wiggler is concentrated in a forward cone 3-4 mrad wide and is split among three possible branch lines: the VUV (0.05-1.5 keV

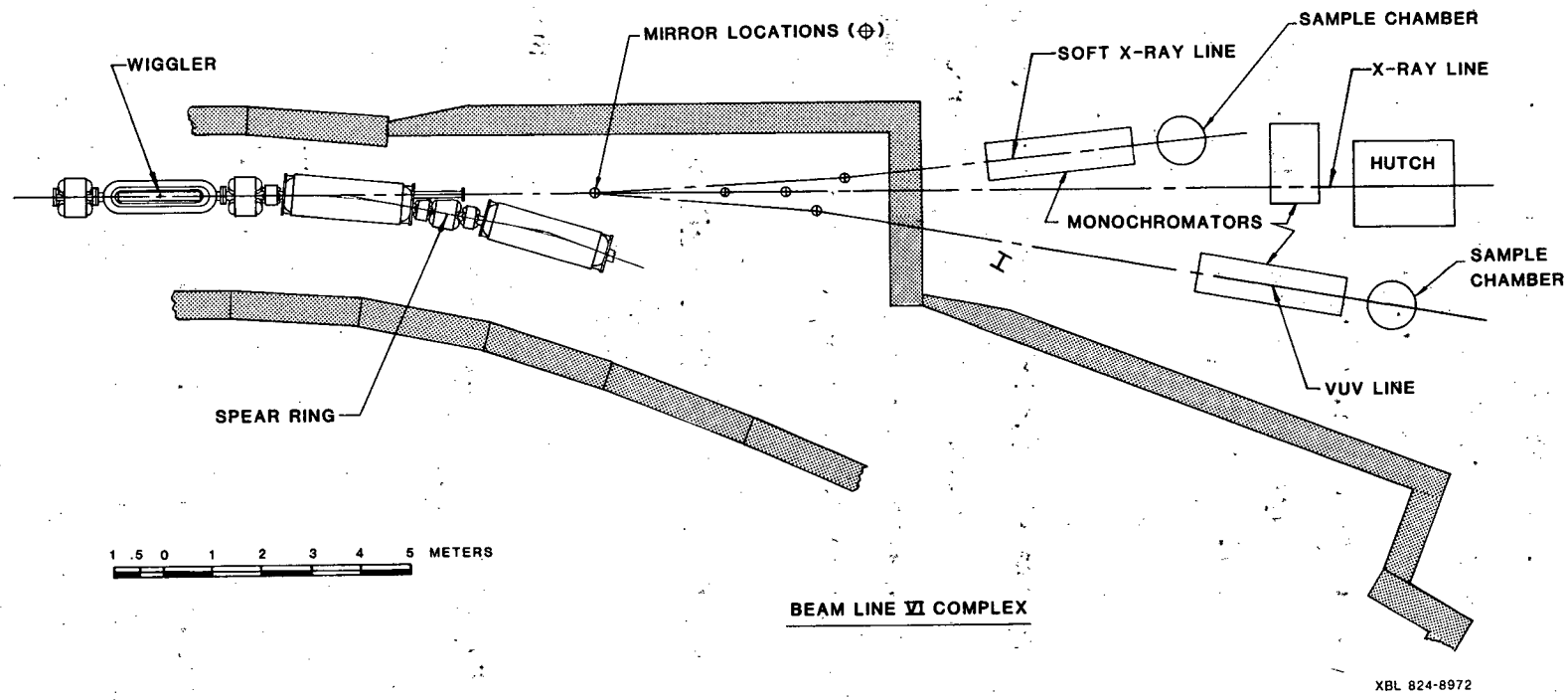
WIGGLER
MIRROR LOCATIONS (⊕)
SOFT X-RAY LINE
SAMPLE CHAMBER
X-RAY LINE
HUTCH
MONOCHROMATORS
SAMPLE CHAMBER
VUV LINE
SPEAR RING
1 .5 0 1 2 3 4 5 METERS
BEAM LINE VI COMPLEX
XBL 824-8972

Figure 1

range); the soft x-ray (1-4 keV range); and the x-ray (3-40 keV range). Initially the x-ray and VUV branch lines will be implemented. The optics design [1] provides for the beam core (hard x-rays) in the forward direction with the upper and lower tails of the beam being horizontally deflected by two vertically separated mirrors--at a 2° grazing angle into the VUV line and, in the opposite direction, at a 1-1/2° grazing angle into the soft x-ray line. The x-ray line will have provision for optional use of small angle vertical deflection, (with bent cylindrical focusing mirrors) for desired cut-off energies.

2. Wiggler

The source of high intensity synchrotron radiation for Beam Line VI will be a short period rare-earth cobalt (REC)-steel hybrid wiggler.[2] Table I gives the basic parameters for this wiggler. The synchrotron radiation output characteristics are given in Table II.

Table I

BEAM LINE VI WIGGLER PARAMETERS

	Nominal Design		Maximum Design
Magnet Type		REC-Steel Hybrid	
Peak magnetic field range (tesla) [± 2% peak to peak field variation]	.006-1.30		.006-1.75
Magnetic period (cm)		7.0	
No. of complete periods		27	
Effective magnetic length (cm)		193.4	
Beam vertical aperture range (cm)	1.8-1.0		1.8-0.6
Pole to pole aperture range (cm)	12-1.2		12-0.8
Wiggler horizontal aperture (cm)		± 1.0	
Aperture field variation (gauss)		30	
Pole width (cm)		8.5	

Table II

WIGGLER SYNCHROTRON LIGHT OUTPUT CHARACTERISTICS

(3.0 GeV, 0.1 Amp)

	Nominal Design 1.30 Tesla	Maximum Design 1.75 Tesla
Horizontal angular divergence (mr)	± 1.45	± 1.95
Peak critical energy (keV)	7.78	10.48
Total radiated power (kW)	1.86	3.38
$K_{max} = .934B_0$ (T) λ_W(cm)	8.5	11.44

Source Size and Divergence

Energy (keV)	Horizontal Divergence (± mr)	Horizontal Half Width (mm)	Vertical Divergence (± mr)	Vertical Half Width (mm)
a). Nominal Design (1.30 Tesla)				
.01	1.45	3.30	1.57	0.90
0.1	1.45	3.30	.59	.37
1.0	1.45	3.30	.22	.20
10.0	1.45	3.30	.08	.16
b) Maximum Design (1.75 Tesla)				
0.01	1.95	3.38	1.78	1.02
0.1	1.95	3.38	.67	.42
1.0	1.95	3.38	.25	.21
10.0	1.95	3.38	.09	.16

The wiggler synchrotron radiation flux output for various vertical angles with a 1.35 tesla wiggler field and a 3.0 GeV and 0.1 ampere circulating beam is given in Figure 2. Figure 3 shows the polatization defined by

$$p = \frac{N_{\parallel} - N_{\perp}}{N_{\parallel} + N_{\perp}}$$

$N_{\parallel}$ and $N_{\perp}$ are the number of photons polarized in the horizontal and vertical directions, respectively.

When the wiggler is operating at low magnetic fields, it will function as an undulator. Figure 4 shows the anticipated spectrum[3] for a 0.1 amp electron current at 3.0 GeV and a wiggler field of 0.3 Tesla.

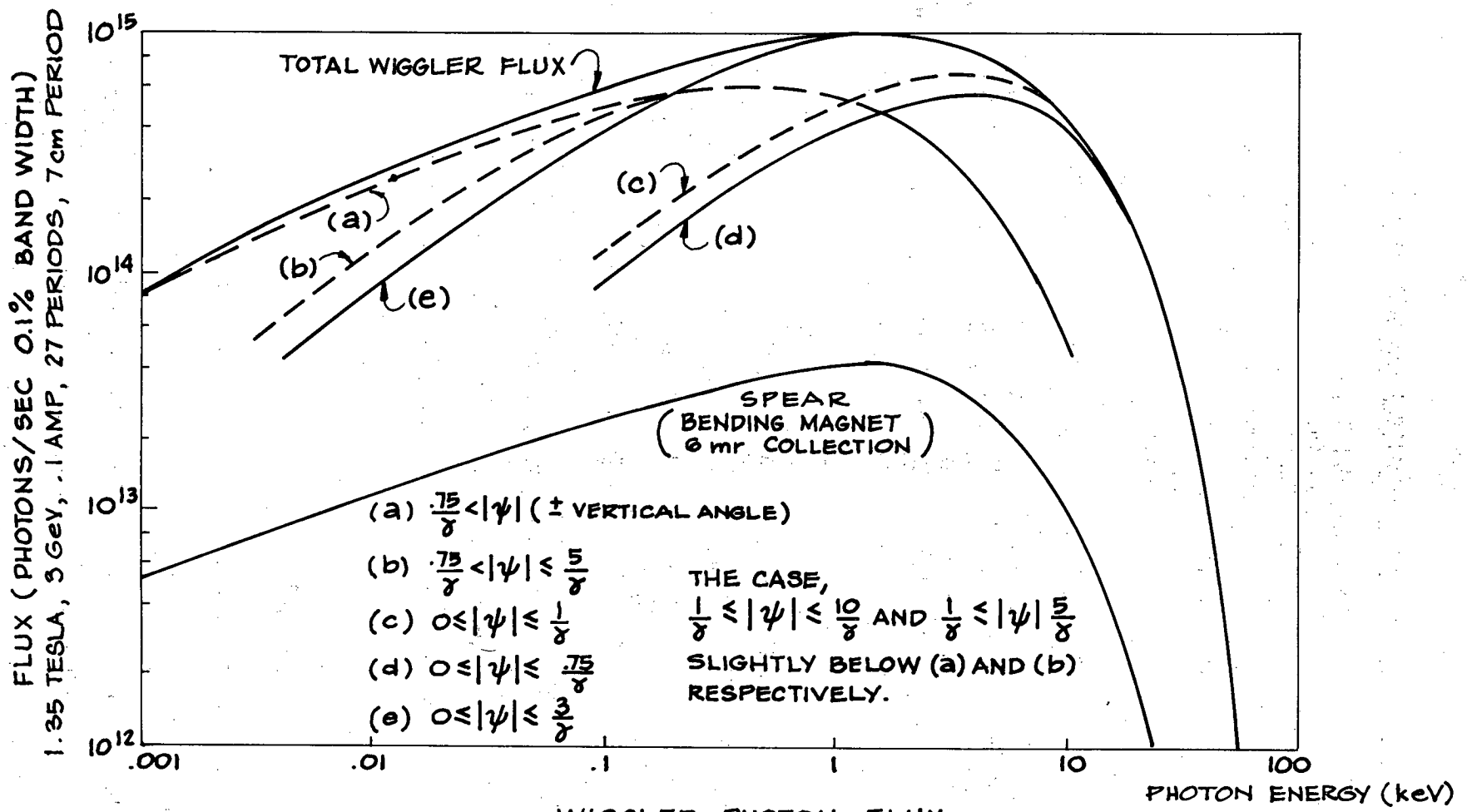

WIGGLER PHOTON FLUX

XBL 824-9151

Figure 2

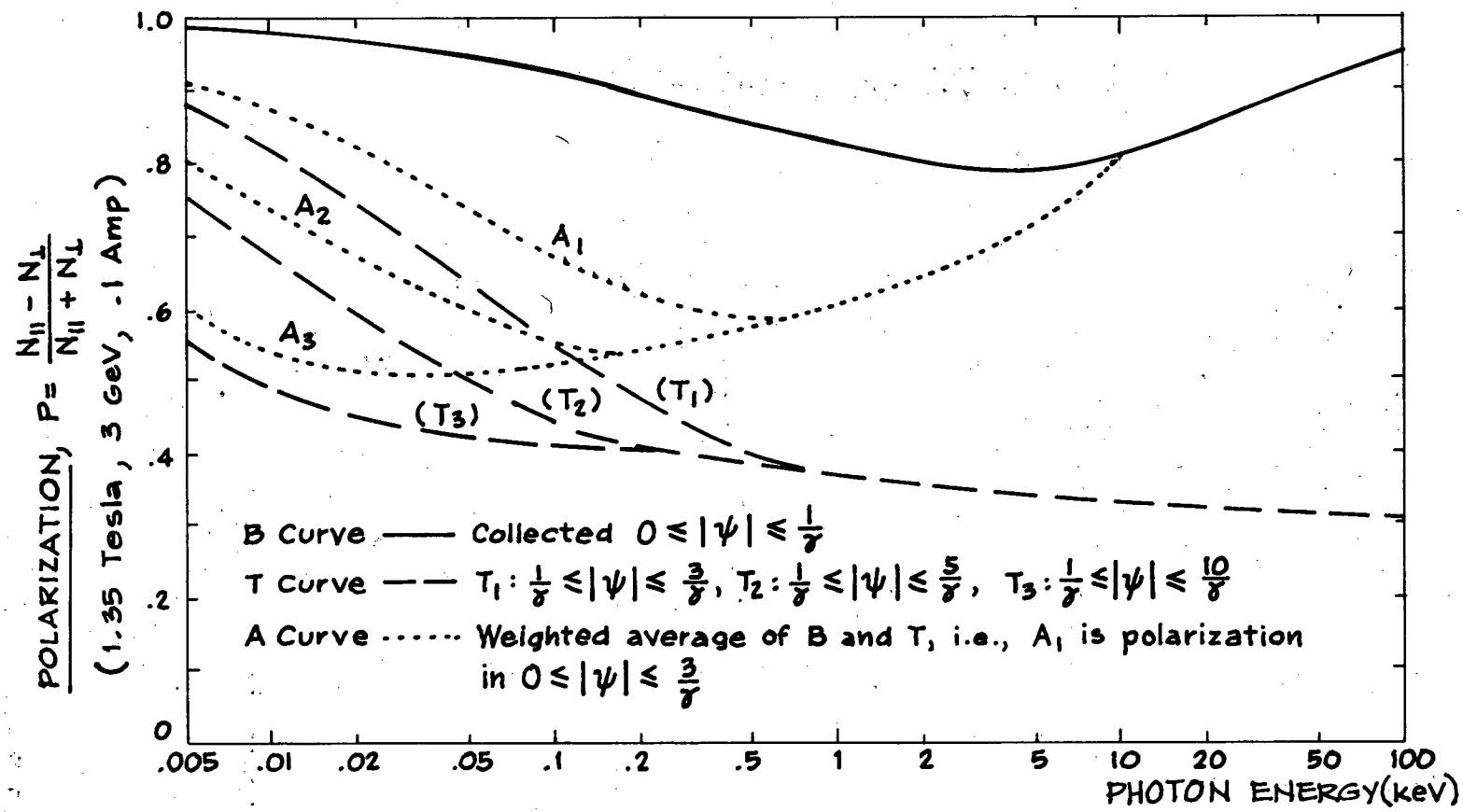

WIGGLER POLARIZATION

XBL 824-9150

Figure 3

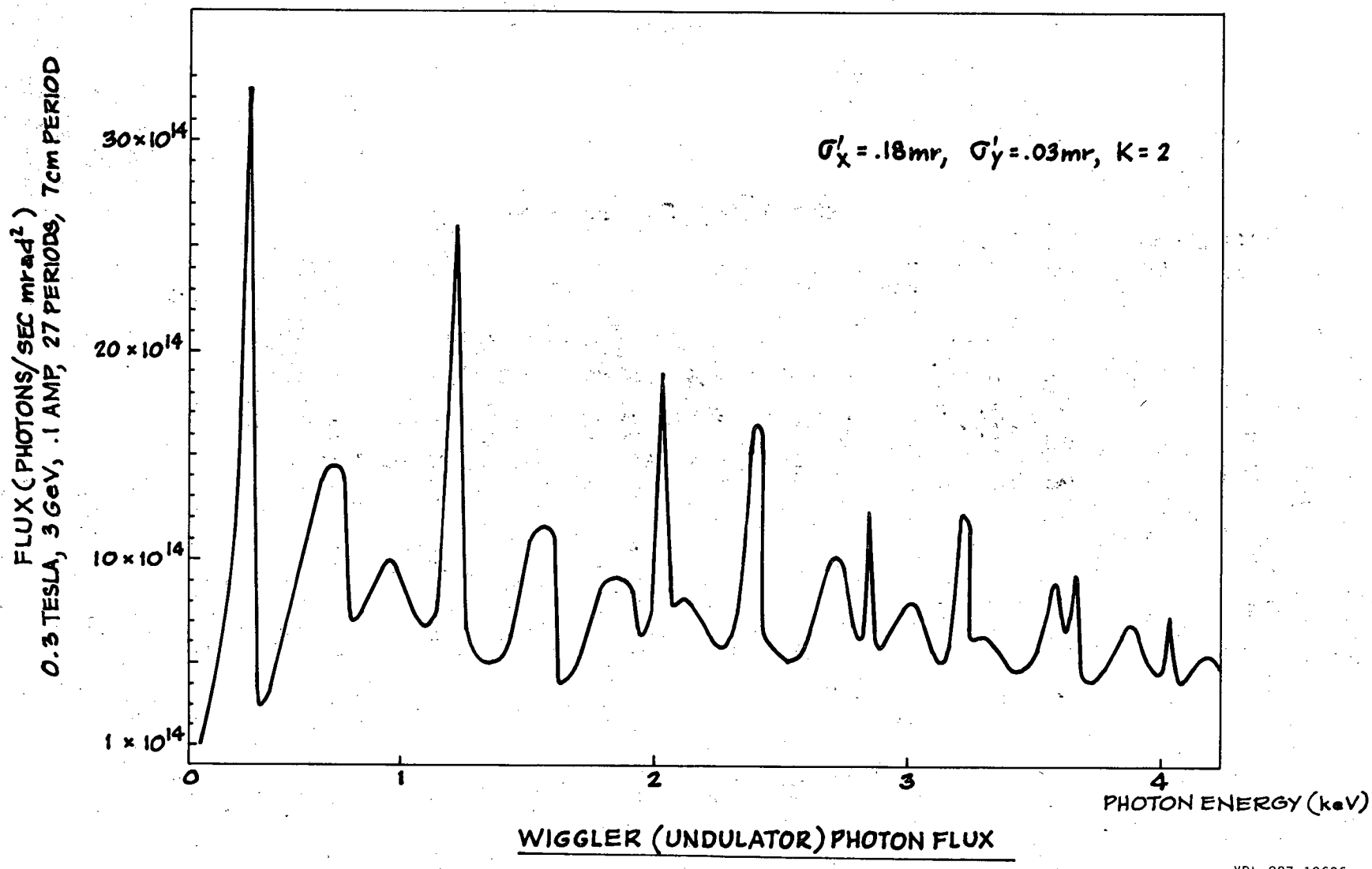

XBL 827-10606

Figure 4

3. Wiggler Design

The wiggler design utilizes the REC - steel hybrid configuration. For comparison, Figure 5 shows quarter period magnetic flux plots of the steel hybrid configuration (a) and of a pure REC configuration (b) for the same period and gap. The REC-steel hybrid configuration, has several advantages over the pure REC approach such as was used in our design of the SPEAR undulator.[4] First, the hybrid can produce a magnetic field which is about 50 percent stronger than is possible with the pure REC device. Second, the field distribution in the hybrid wiggler is dominated by the shape of the steel pole surfaces. Although the steel is driven into saturation, its permeability is still large compared to unity. This makes the field strength and distribution much less dependent on material properties than is the case in the pure REC design. Third, it will be possible to tune the peak field at individual steel poles by using variable flux shunts at each pole.

Figure 6 is an elevation cross-section of the Beam Line VI Wiggler. The basic arrangement of the poles and REC is shown. The longitudinal location of the tuning studs for each pole is indicated. The backing plate has two functions; it serves as part of the magnetic tuning circuit as well as main structural support for the pole assemblies. Figure 7 shows a cut-away section of the wiggler and the associated flexible vacuum chamber.

The pole-REC configuration shown in Figure 6, was optimized using the PANDIRA[5] magnetic design code. After establishing the basic configuration, pole thickness was determined, subject to the constant 7 cm period restraint and a 0.8 cm gap, so as to achieve the highest peak gap field. Computations were carried out with a REC coercive force of 9000 Oersted and a Vanadium Permendur pole. Figure 5 (a) shows the magnetic flux plot at

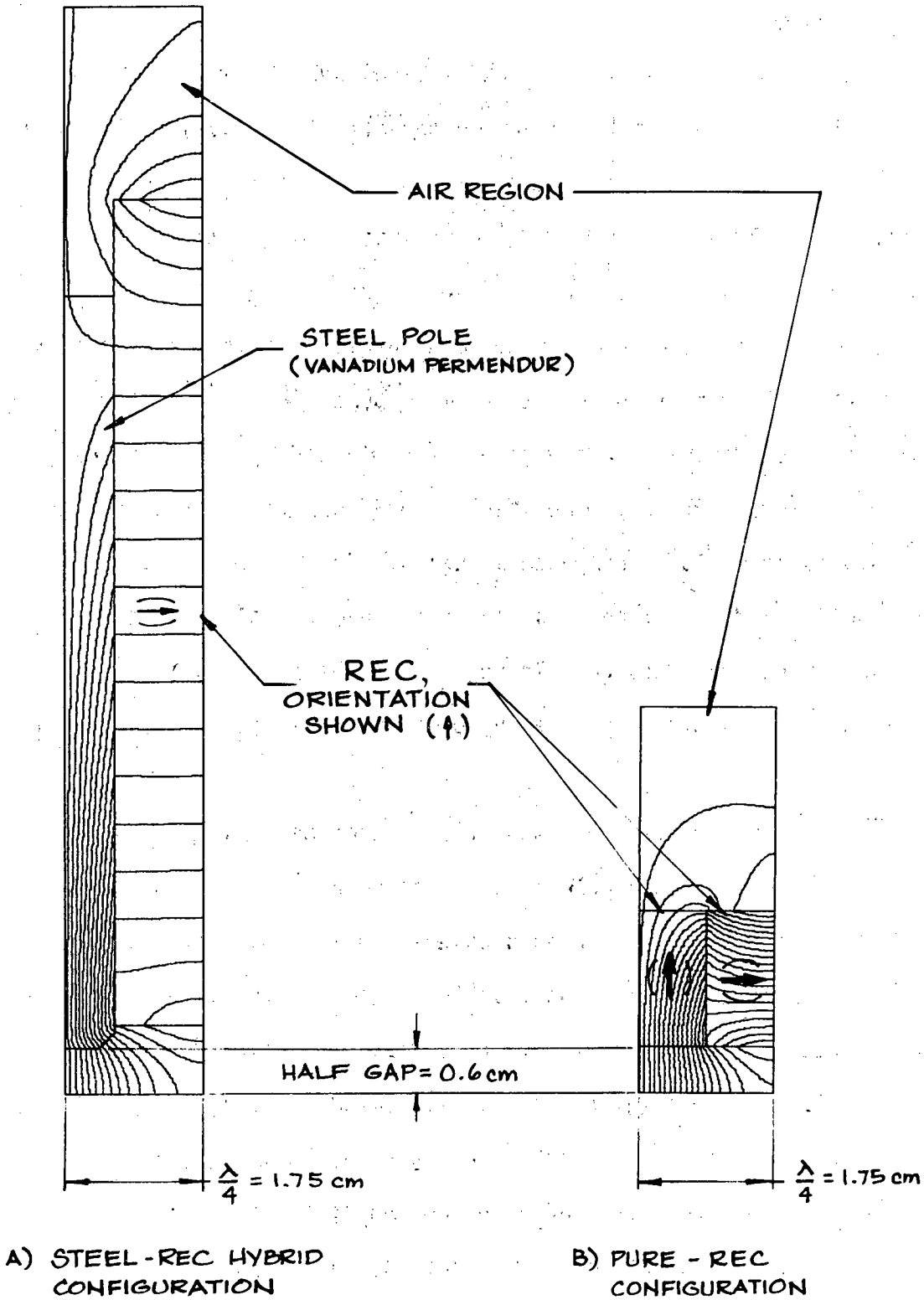

QUARTER PERIOD MAGNETIC FLUX PLOTS

XBL 827-10718

Figure 5

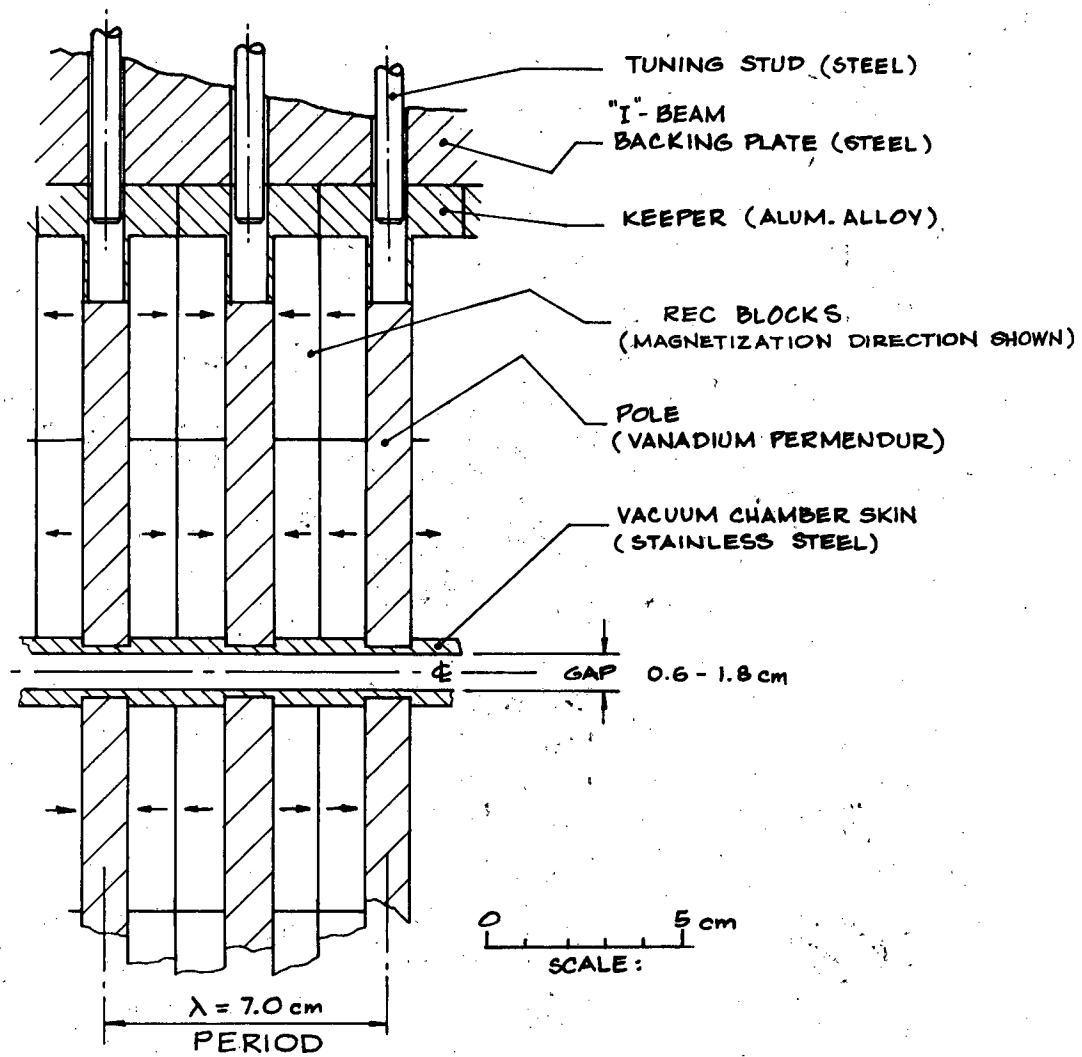

WIGGLER ELEVATION
CROSS SECTION

XBL 824-9152

Figure 6

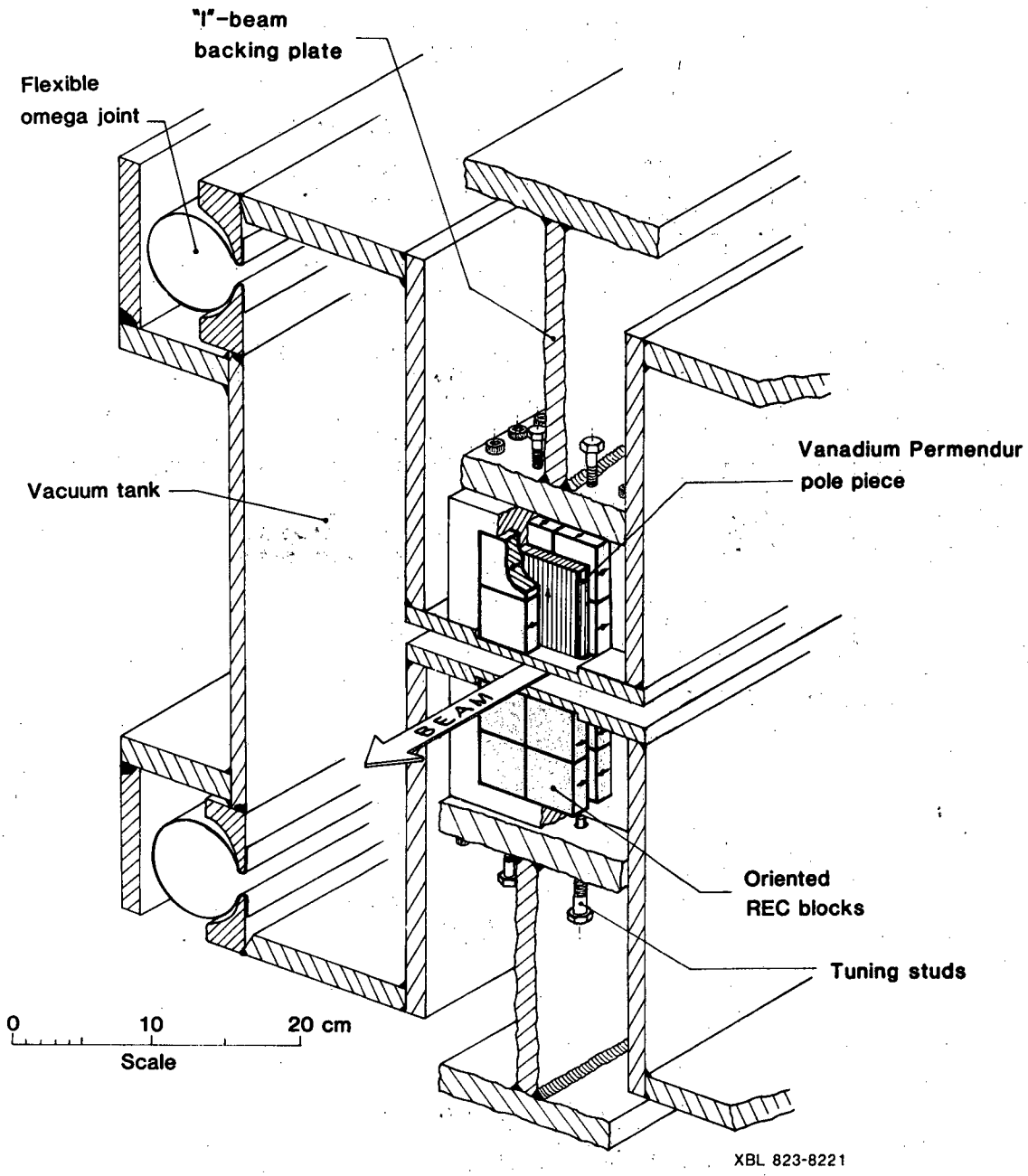

BEAM LINE VI WIGGLER

Figure 7

1.30 Teslas peak gap field with a pole to pole aperture of 1.2 cm. In this case, most of the REC is at a field level of B~0.18 Teslas. The pole is chamfered with a simple 45° angle to decrease pole corner saturation and to slightly increase peak field.

A prototype half-period pole assembly of the optimized configuration, was fabricated and tested as shown in Figure 8. To expedite the test, an iron pole was used with REC having a 7950 Oersted coercive force. Test results are summarized on Figure 9. The results show that the 8.5 cm wide pole is adequate for the 2 cm aperture width, where the transverse vertical field tolerance is the lesser of 30 gauss or a 5 percent field error. Further, a tuning range of 1 percent was obtained for central fields up to 1.03 Teslas (6 mm half gap) and the range decreased to about a 1/2 percent, due to pole saturation, at 1.42 Teslas (4 mm half gap). With a 4 mm half gap, an 8 percent lower peak field was measured than was predicted with the two-dimensional computer code which is attributed to the three dimensional aspects of the REC-pole assembly and to mechanical considerations.

In order to vary the wiggler field over the range from .006 to 1.75 Teslas, the wiggler pole to pole aperture must be varied from 12 cm to 0.8 cm. In addition, operation of the wiggler requires that the integral of the field through each half of the wiggler be zero for all field levels. Nulling the field intergral will be accomplished using special end poles, which have both REC and energizing coils. Using the POISSON[6] computer code, a magnetic design was established such that no coil excitation is required for the 12 cm aperture and only a modest 700 ampere-turns being required for the 0.8 cm aperture.

The wiggler magnet is outside a thin walled, variable aperture vacuum tank. Thus the wiggler magnet itself can be designed without the

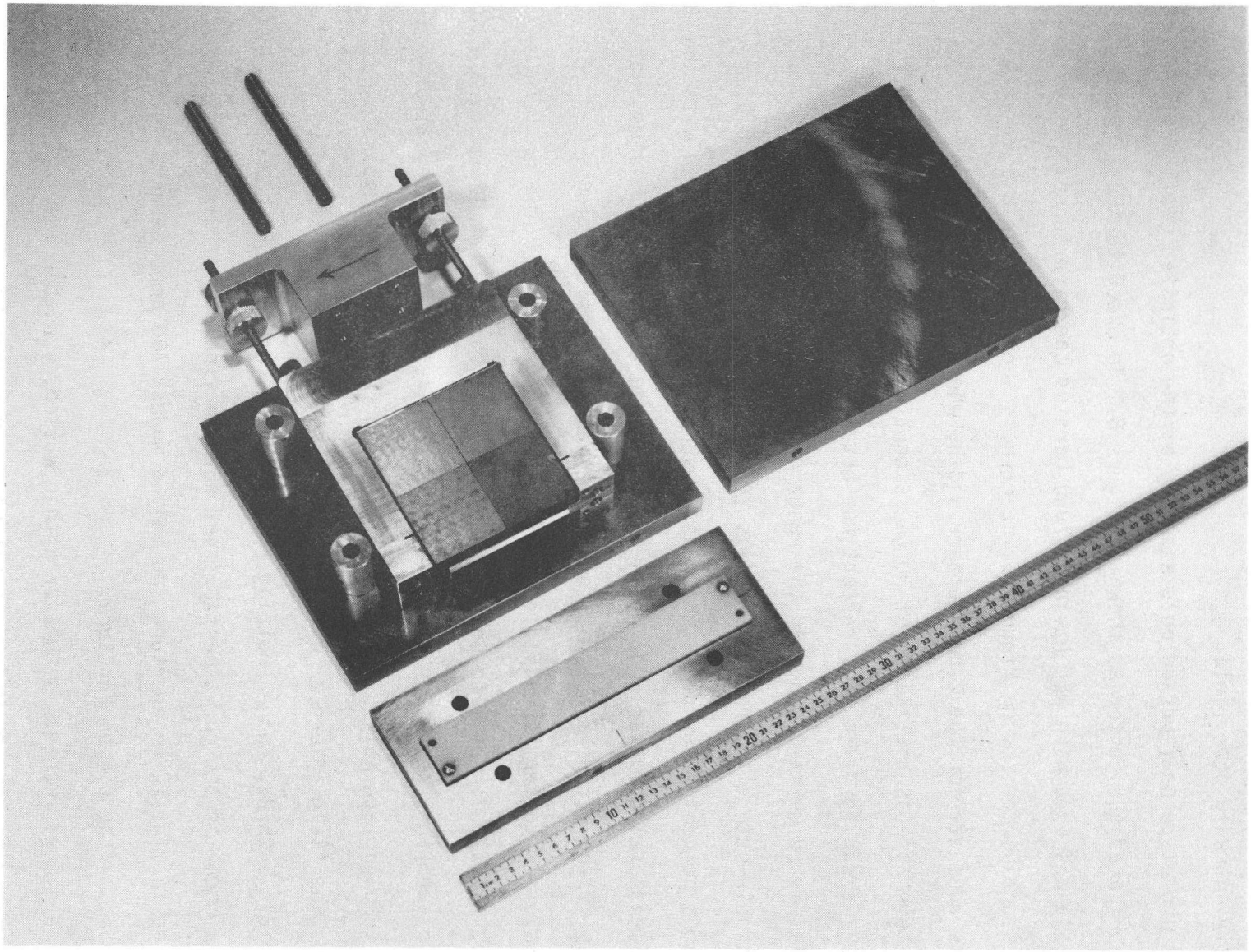

CBB 827-6293

Wiggler Prototype Half Period Test Assembly

Figure 8

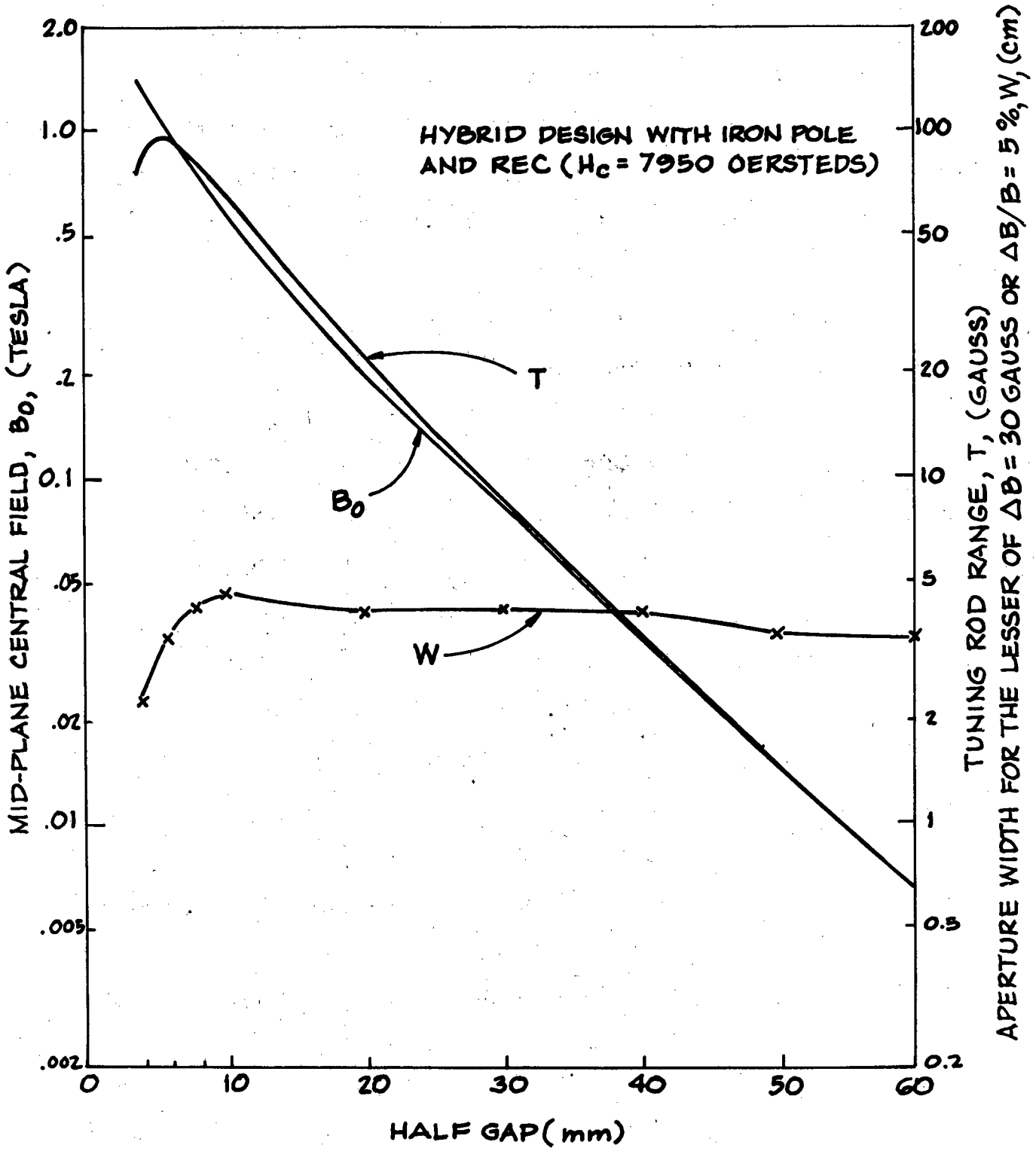

WIGGLER PROTOTYPE TEST RESULTS

XBL 827-10605

Figure 9

constraints that would be imposed by an in-vacuum design. Figure 6 shows the self supporting ribbed sections of the vacuum chamber between the wiggler poles. The vacuum chamber aperture will vary from 1.8 cm (the nominal injection aperture) to an minimum of 0.6 cm (1.75 tesla wiggler operation). To achieve this vacuum chamber motion (1.2 cm), two flexible omega joints will be used to obtain the necessary change in aperture, as shown in Figure 7.

The wiggler will be equipped with five remote drive systems with the following functions and motions.

Function	Drive	Range
Adjusts wiggler magnetic field	Wiggler pole to pole gap	0.6 cm to 12 cm and to 90 cm for servicing
Allows for Spear injection	Vacuum chamber gap	0.6 cm to 1.8 cm
Allows alignment to SPEAR orbit	Vertical adjustment	± 0.2 cm and to 35 cm for servicing
	Horizontal and yaw adjustments	± 0.6 cm

Tentative alignment tolerances for the wiggler are:

Motion	Tolerance
Horizontal	± 1 mm
Vertical	∓ .25 mm (± .25 mm reproducibility)
Longitudinal	∓ 3 mm
Roll	∓ 4 mrad
Yaw	∓ 4 mrad
Pitch	∓ 0.1 mrad (± 0.1 mrad reproducibility)

4. Beam Line Thermal Considerations

Table III summarizes total beam power and peak power density, at 7.5 meters from the wiggler source point, for the nominal design and future operation of the Beam Line VI Complex.

Table III

	Wiggler Field (Tesla)	Electron Energy (GeV)	Circulating Current (maps)	Total Power (Watts)	Peak power density 7.5 meters (Watts/cm^2)
Nominal Design	1.3	3.0	100	1900	5800
Future Operations	1.75	3.0	200	6800	15000
	1.75	3.7	100	5200	18000

The nominal design is a factor five times more intense than the existing SSRL Beam Line IV wiggler line. At these intensities all beam line components that are illuminated by the beam must be suitably cooled or protected. All existing SSRL components such as masks, slits, shutters, and position monitors, which the beam may strike are being redesigned to handle this intense power. The design approach is to use sloping surfaces, to reduce the effective power density, along with water cooling. Components (e.g.; valves or beam stoppers) which normally are not exposed to these beam intensities, except under fault operation, will be suitably interlocked so that the SPEAR beam is immediately dumped.

The beam line envelope will be sized to allow for a horizontal beam width of $\pm$ 1.4 milliradians beam divergence plus a horizontal beam movement of $\pm$ 3 mm. The vertical opening will be for a $\pm$ 1.7 milliradians ($\pm$ 10/γ at 3.0 GeV) beam divergence plus a vertical beam movement of $\pm$ 1 mm for the VUV and soft x-ray beams and $\pm$ 0.54 mrad for the x-ray beam.

The Beam Line VI component schematic, Figure 10, shows the locations of the various mirrors. For example, the 1.0 degree (0.5 degree grazing angle) x-ray, mirror at 12.8 m from the wiggler source point will have a maximum absorbed power intensity of 11 watts per square centimeter for the nominal

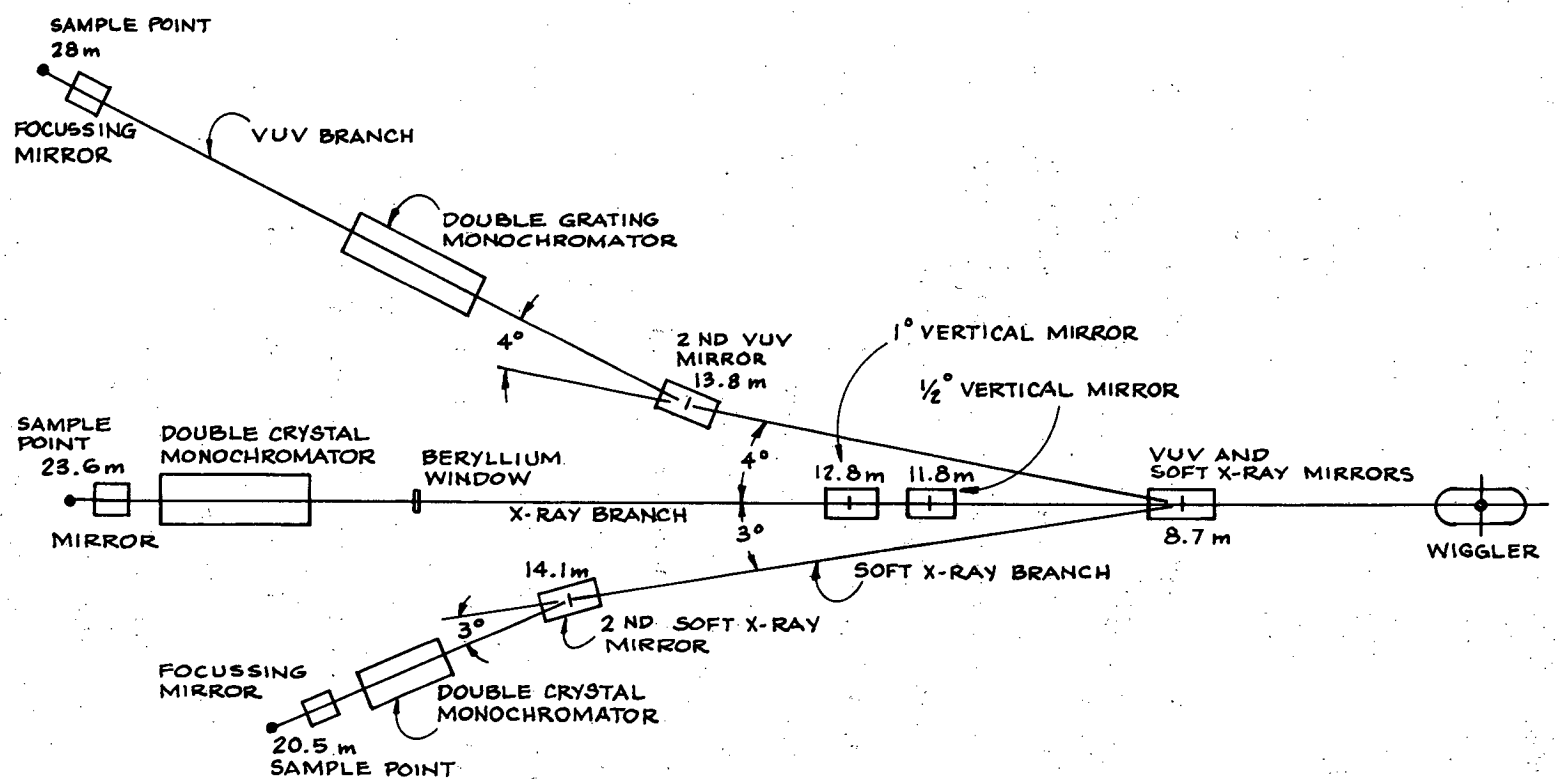

BEAM LINE VI COMPONENT SCHEMATIC

XBL 824-9339

Figure 10

design parameters and 45 watts per square centimeter for the projected intensity increase at SPEAR.

Mirrors, in addition to heat removal considerations, have the additional problem of thermal distortion which can result in poor optical performance. For mirrors the basic design approach is to reduce distortion due to heating by attaching the mirror to stiffening members which will reduce the distortion tendency. The mirror systems are quite complex. They will have cooling tubes, over-temperature interlocks, a special backing plate system, along with a more massive bending mechanisms (toroidal mirrors).

5. Beam Lines

5.1 X-ray beam line

As shown in Figure 10, provisions will be made for two bent cylindrical x-ray mirrors, having cutoffs at 10 keV and 21 keV, respectively. The monochromator will be an SSRL standard Hower-Brown version similar to those installed on beam lines IV and VII at SSRL. A tandem hutch arrangement will be employed, with the first unit serving as a general purpose experimental enclosure, and the second unit enclosing a general purpose diffractometer.

5.2 VUV Branch Line

The design will implement a new design of double grating monochromator. This monochromator utilizes the total horizontal fan but slightly less than half of the vertical beam distribution. This reduces the power loading of the VUV beam splitter mirror and allows the x-ray end station to utilize almost all the horizontal orbit hard x-ray radiation.

The monochromator emphasizes the 50-1500 eV spectral range and is designed for high energy resolution (better than 0.3 eV over the whole range) and good order and scattered light sorting (< 2 percent). Even with

in these constraints the bright wiggler source still allows for a reasonably high photon flux (> 5 x 10^{10} photons/sec/0.1 percent bandwidth) over the entire spectral range. The optical design of the monochromator utilizes a concept originally suggested by W. Hunter (NBS) and improved and adapted to the wiggler sources by M. Howells (BNL).[7] Figure 11 shows the resulting LBL conceptual design presently being developed.

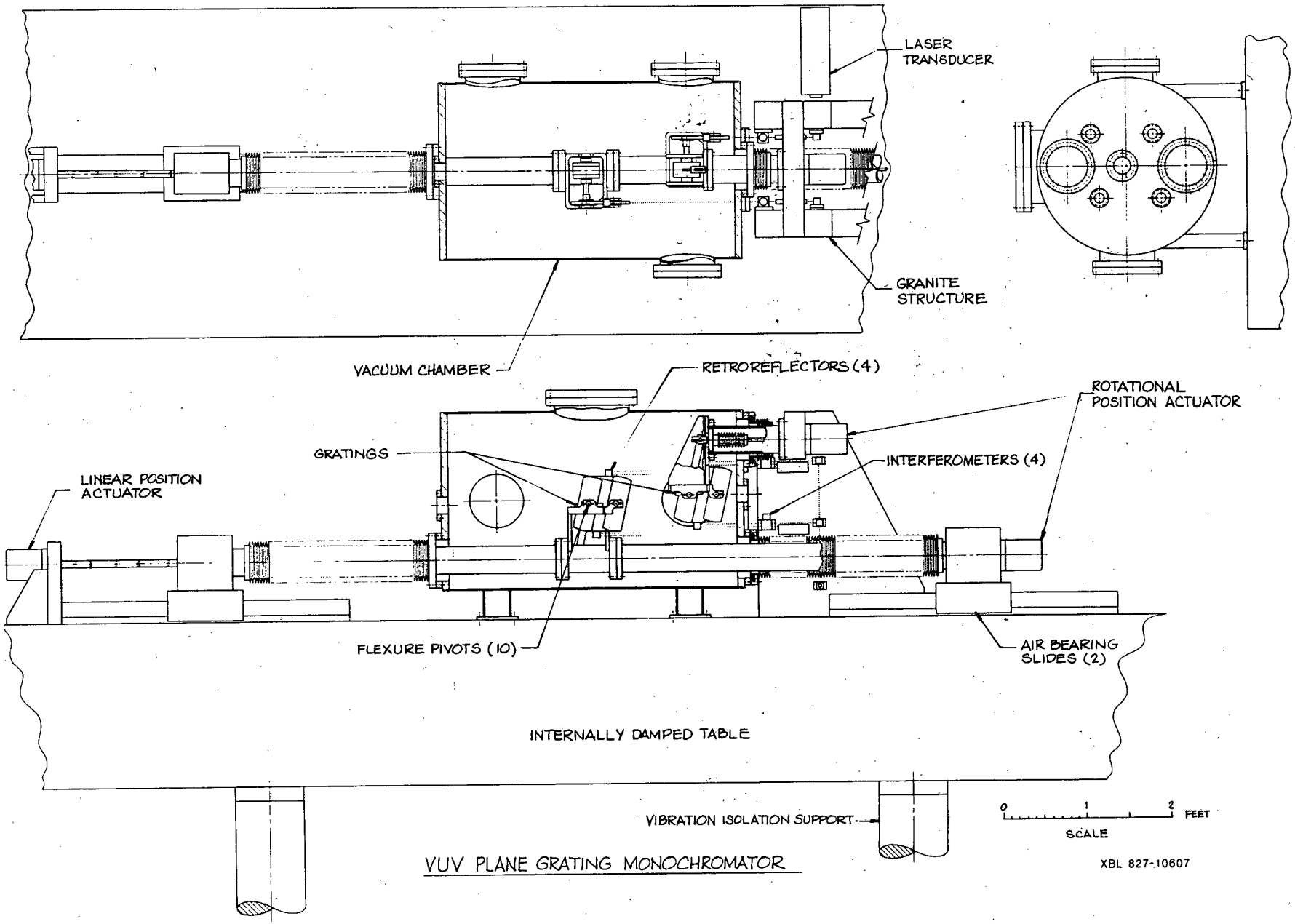
LASER TRANSDUCER
GRANITE STRUCTURE
VACUUM CHAMBER
RETROREFLECTORS (4)
ROTATIONAL POSITION ACTUATOR
GRATINGS
INTERFEROMETERS (4)
LINEAR POSITION ACTUATOR
FLEXURE PIVOTS (10)
AIR BEARING SLIDES (2)
INTERNALLY DAMPED TABLE
VIBRATION ISOLATION SUPPORT
0 1 2 FEET
SCALE
VUV PLANE GRATING MONOCHROMATOR
XBL 827-10607

Figure 11

6. References

1. Kwang- Je Kim, Optics of Beam Line VI, LBL Internal Report, 2/17/82.

2. Klaus Halbach, Rec-Steel Hybrid Wiggler Design, Nuclear Instruments and Methods for Physical Research (to be published).

3. Kwang-JE Kim, Emittance Effect on Undulator Radiation, Nuclear Instrument and Methods for Physical Research (to be published).

4. Klaus Halbach, John Chin, Egon Hoyer, Herman Winick, Robert Cronin, John Yang, Yadu Zambre, A Permanent Magnet Undulator for SPEAR, IEEE Transactions, Nuclear Science. NS-28, 3136 (1981).

5. PANDIRA is an improved version of Poisson which allows solution of permanent magnet and residual field problems.

6. Poisson is an improved verson of Trim (Trim originally written by A.M. Winslow, J. Computer Phys. 1, 149, 1967) that was developed by K. Halbach, R. Holsinger, and J.R. Spoerl.

7. Malcolm Howells, Some Ideas on the Design of Soft X-ray Monochromators for Use With Wiggler/Undulator Radiation, Exxon Report, 2/5/82.

This report was done with support from the Department of Energy. Any conclusions or opinions expressed in this report represent solely those of the author(s) and not necessarily those of The Regents of the University of California, the Lawrence Berkeley Laboratory or the Department of Energy.

Reference to a company or product name does not imply approval or recommendation of the product by the University of California or the U.S. Department of Energy to the exclusion of others that may be suitable.

TECHNICAL INFORMATION DEPARTMENT
LAWRENCE BERKELEY LABORATORY
UNIVERSITY OF CALIFORNIA
BERKELEY, CALIFORNIA 94720