Presented at the 1973 Cryogenic
Engineering Conference,
Atlanta, Georgia, August 8-10, 1973

LBL-1483
c.1

A SIMPLE METHOD FOR CHARPY IMPACT TESTING BELOW 6°K

S. Jin, W. A. Horwood, J. W. Morris, Jr. and V. F. Zackay

March 1973

Prepared for the U. S. Atomic Energy Commission
under Contract W-7405-ENG-48

For Reference

Not to be taken from this room

LBL-1483
c.1

DISCLAIMER

This document was prepared as an account of work sponsored by the United States Government. While this document is believed to contain correct information, neither the United States Government nor any agency thereof, nor the Regents of the University of California, nor any of their employees, makes any warranty, express or implied, or assumes any legal responsibility for the accuracy, completeness, or usefulness of any information, apparatus, product, or process disclosed, or represents that its use would not infringe privately owned rights. Reference herein to any specific commercial product, process, or service by its trade name, trademark, manufacturer, or otherwise, does not necessarily constitute or imply its endorsement, recommendation, or favoring by the United States Government or any agency thereof, or the Regents of the University of California. The views and opinions of authors expressed herein do not necessarily state or reflect those of the United States Government or any agency thereof or the Regents of the University of California.

0 0 0 0 3 9 0 0 7 1 3

A SIMPLE METHOD FOR CHARPY IMPACT TESTING BELOW 6°K

S. Jin, W. A. Horwood, J. W. Morris, Jr. and V. F. Zackay
Department of Materials Science and Engineering
University of California, Berkeley and
Inorganic Materials Research Division,
Lawrence Berkeley Laboratory

ABSTRACT

This paper reports a simple, inexpensive technique for conducting Charpy impact tests at temperatures as low as 5 - 6°K. A Charpy V-notch specimen is wrapped in styrofoam and placed inside a thin-walled lucite box. Liquid helium is then transferred to the box system at 2-3 psi dewar pressure and a flow rate of approximately 2 liters/minute using a vacuum insulated transfer line. A steady state temperature of 5 - 6°K is quickly attained and maintained as long as helium transfer is continued. Tests comparing the proposed technique to the ASTM standard method at liquid nitrogen temperature indicate that a reasonably accurate impact energy is obtained.

I. INTRODUCTION

Impact testing at temperatures down to 77°K (liquid nitrogen temperature) is routinely accomplished according to ASTM specifications. The specimen is transferred in open air from a liquid bath to the test machine anvil and the pendulum is released within five seconds. However, this method is impractical at lower temperatures since the low heat capacity of the metal leads to a rapid increase in specimen temperature during transfer.

To obtain valid low-temperature data DeSisto[1] designed an apparatus consisting of an evacuated enclosure which houses both an impact machine and an automatic feed mechanism which rapidly inserts specimens cooled in liquid helium into the test machine anvil. He was able to obtain data at instantaneous sample temperatures near 8°K. In other work Kiefer, et al[2] employed a glove-box arrangement to manually transfer specimens from an open-mouth dewar of liquid hydrogen to the test machine under inert atmosphere. They report test temperatures near 25°K when tested within 2 seconds.

While these techniques have permitted impact testing at low temperature, the elaborate apparatus required makes them impractical for use in many laboratories, including our own. We therefore sought a new and simple method to employ in current research on the design of tough alloys for cryogenic use. Since our research concentrates on alloys of body centered cubic structure whose mechanical properties are typically sharp functions of temperature in the cryogenic region, we were particularly anxious that the test technique allow close temperature control

and insure the absence of appreciable thermal gradients in the specimen at the moment of impact.

Our approach was to encase the test samples within individual insulating boxes which permit us to retain a controlled sample temperature near liquid helium temperature during the impact test. The requirements for a suitable boxing arrangement are that it must be an efficient insulator which withstands cooling to liquid helium temperature but contributes negligibly to the measured Charpy energies. These requirements seem well satisfied if we employ a thin-walled lucite box insulated with open cell styrofoam which is continuously bathed with liquid helium. The test procedure and its calibration are discussed in the following sections.

II. EXPERIMENTAL METHOD

A Charpy V-notch specimen is wrapped with open-cell styrofoam which is grooved along the specimen length direction to allow an easy passage of liquid helium (Fig. 1). The styrofoam surface is then wrapped with Scotch tape. The insulated specimen is then inserted into a rectangular lucite box (with one or two faces open) of 1/32" wall thickness having two 5/16" diamter holes (Fig. 2). The cover for the open face is glued to the box system with Ethylene Dichloride solution. The Scotch tape and the styrofoam layer underneath the 5/16" holes are removed. A polyethylene inlet pipe (3/8" I.D. and 1/2"L) is glued to the box by Duco Cement. A lucite outlet pipe (3/8" I.D. and 1"L) is attached with Ethylene Dichloride solution.

This box system is placed on the anvil of a Charpy test machine. Liquid helium is transferred to the system through the inlet pipe from a pressurized dewar using an ordinary vacuum-insulated transferline. The pressure inside the dewar is maintained at around 2-3 psi by an external supply of helium gas. Fig. 3 is an illustration of the method. In Fig. 4, the liquid helium is being transferred to the box system located on the test machine anvil. A specimen temeprature of 5-6°K is quickly attained and maintained as long as the liquid helium is transferred. Given proper assembly, the lucite box does not crack during liquid helium transfer. The liquid helium flows easily through the system and can be observed through the box wall. The released pendulum breaks the whole system. When the system is struck the weak bond at the base of the polyethylene inlet pipe fractures, thus ensuring the safety of the helium transfer line.

The open cell styrofoam layer has two functions. It absorbs the difference in thermal contraction between the lucite box and the specimen on cooling to liquid helium temperature, therby preventing cracking of the box and escape of liquid helium. It also allows the interstitial flow of liquid helium around the specimen for maximum cooling efficiency. After steady state is reached, a layer of liquid helium surrounds the metal specimen. Moreover, the insulated lucite box is extremely brittle at liquid helium temperature and absorbs very little energy during testing.

Because of the restricted space in the anvil of our test machine, the specimen length was reduce to 51 mm from the ASTM standard 55mm length. However, the shortened length does not seem to introduce

appreciable error. If the anvil were modified to allow larger specimens, a full size specimen could be used.

III. TEMPERATURE CALIBRATION

The specimen temperature was measured as a function of time using the following procedure.

A 0.1" diameter by 0.2" deep hole was drilled in the calibration specimen, and a 0.125" diameter by 0.5" long section of brass tubing was silver soldered over the hole to act as a collar to keep liquid helium away from the monitoring thermocouple (as shown in Fig. 2). For specimens that were actually impacted, plastic tubings of the same size were glued to the specimen. The insulating spacer and the box were then assembled around the specimen. A thermocouple (Au+0.07 %Fe - Chromel) was inserted into the drilled hole so that it was in good contact with the specimen. The thermocouple was then glued to the brass tube and the brass tube sealed to the lucite box to prevent excape of liquid helium. This configuration ensures that the thermocouple measures the temperature at the centerline of the specimen rather than that of the bath of liquid helium in which the specimen is immersed.

A typical temperature time curve obtained using a dewar pressure of 2-3 psi during transfer is shown in Fig. 5. Liquid helium transfer is initiated at t=0. Between t=0 and t_1, liquid helium is consumed in cooling the transfer line and does not significantly affect the specimen temperature. At t_1 liquid helium begins to cool the box system. The specimen temperature drops to below $6^{o}K$ in about 60-80 seconds. It then remains constant for as long as liquid helium is transferred. At t_2 the hissing sound of the evaporated helium gas stops and liquid helium starts

to come out of the outlet pipe. This evident change may be used as a sign that the test temperature has been reached. The pendulum may then be released. The specimen remains at 5-6°K until impact.

After testing, the helium transfer is halted and the next specimen set up for impacting. The transfer line consumes very little helium for its cooling after the first test. Liquid helium consumption for the first test is approximately 5-6 liters. In continuous operation each subsequent test consumes 2-3 liters of liquid helium.

Specimen temperatures both at point A and B in Fig. 2 (each point is approximately one-fourth of the specimen length apart from the notch) were measured. At the dewar pressure of 2-3 psi, the temperature gradient was hardly noticeable. However, at below 1 psi the temperature at A was several degrees higher than that at B. Therefore, it is necessary to keep the dewar pressure above a certain level to maintain a uniform specimen temperature.

IV. IMPACT TEST CALIBRATION

There are two principal sources of error in the proposed impact test technique: a positive error introduced by the lucite box and styrofoam layer, and a negative error due to the shortened specimen length. Both errors appear to be small.

Plastics such as lucite are usually very brittle at low temperatures. Several tests at liquid helium temperature were made with the packing system without the metal specimen inside, and the impact energy absorbed by the lucite box and the styrofoam spacer was less than 1 ft-lb. When a box system with a specimen inside is impacted

the face of the lucite box which is behind the specimen is crushed, and this also will contribute a small positive error.

Unless the anvil of the test machine is modified, the specimen length must be shortened from 55 mm to 51 mm. For very tough alloys this shortened length may introduce a negative error in the measured impact energy because the maximum possible angle of bend is decreased.

For the purpose of calibration, 17 specimens of commercial 304 stainless steel with 55 mm length were tested at liquid nitrogen temperature according to the ASTM specification (open-mouth transfer). Another 17 specimens of the same material with 51 mm length were tested inside the lucite box system by transferring liquid nitrogen to the box. The results are compared in Table 1. The difference in the average impact energy obtained by these two methods was 3.6 ft-lbs (approximately 3% of the average energy of this material), which was much less than the average scattering of the test data. The standard deviation of data obtained using the ASTM standard method was 8.7 ft-lbs. Less extensive comparison tests with other cryogenic steels also showed good agreement between the standard and the proposed methods.

The small deviation in average impact energy between the standard and the proposed method seems principally due to the difference in specimen length. This error may decrease if the anvil of the impact machine is adjusted to accommodate a 55 mm boxed specimen. The increased scatter of data obtained with the proposed method was anticipated since the boxing arrangement introduces additional variables and since it is difficult to ensure that the notch in the boxed specimen is well centered in the

anvil. Given that the Charpy impact test is at best a semi-quantitative measure of the toughness of a material, the mechanical accuracy of the proposed test method seems reasonable.

IV. DISCUSSION

The suggested test method has been used routinely in research on cyrogenic alloys current at Berkeley. Some results are reported elsewhere in this Conference[3]. It offers two principal advantages. First, the tests are inexpensive and may be performed on any available impact machine whose specimen holder will accommodate the boxed specimen. Second, the method allows maintenance of a steady, uniform sample temperature of 5 - 6°K and avoids thermal gradients induced by sample transfer to the anvil.

ACKNOWLEDGEMENTS

The authors are grateful to G. A. Gachis and V. D. Santos of the Cryogenic Dewar Coordination Board of the Lawrence Berkeley Laboratory for advice and discussion. This work was supported by the Atomic Energy Commission through the Inorganic Materials Research Division of the Lawrence Berkeley Laboratory, and by the Office of Naval Research under Contract N00014-69-A-0200-1062, NR 031-762

REFERENCES

1. T. S. DeSisto, "Automatic Impact Testing to 8°K", Tech. Rep., 112/93, Watertown Arsenal Lab., July, 1958.

2. T. F. Kiefer, et al., "Charpy Impact Testing at 20°K, Advances in Cryogenic Engineering", Plenum Press, New York Vo. 10, Sec. A-L, p.56, 1965.

3. S. Jin, J. W. Morris, Jr., V. F. Zackay, this conference.

0 0 0 0 3 9 0 2 7 2 0

TABLE I

CHARPY IMPACT TESTING AT 77°K

	ASTM Standard Method	Proposed Method
Test Temperature	77°K	77°K
Method of Cooling	open air transfer	box system
Specimen Length	55mm	51mm
Number of Specimens Tested	17	17
Average Impact Energy	124.5 ft-lb	120.9 ft-lb
Standard Deviation	8.7 ft-lb	13.8 ft-lb

FIGURE CAPTIONS

Fig. 1. Grooves made on each piece of the styrofoam layer. (Grooved side is to face the metal specimen.)

Fig. 2. Specimen packing inside a lucite box (top view).

Fig. 3. Schematic illustration of the test method (front view).

Fig. 4. Tranfer of liquid helium to the box system. (Liquid helium is about to come out.)

Fig. 5. Cooling curves obtained using Au(0.07% Fe) - chromel thermocouple.

a. Thermocouple tip is directly immersed in liquid helium.

b. Specimen temperature when liquid helium is tranferred.

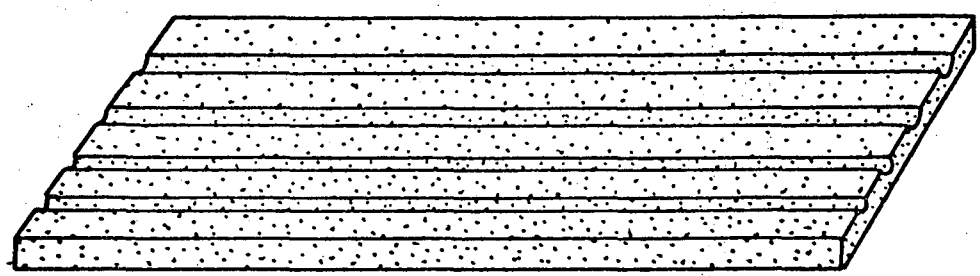

XBL 732-5792

Fig. 1

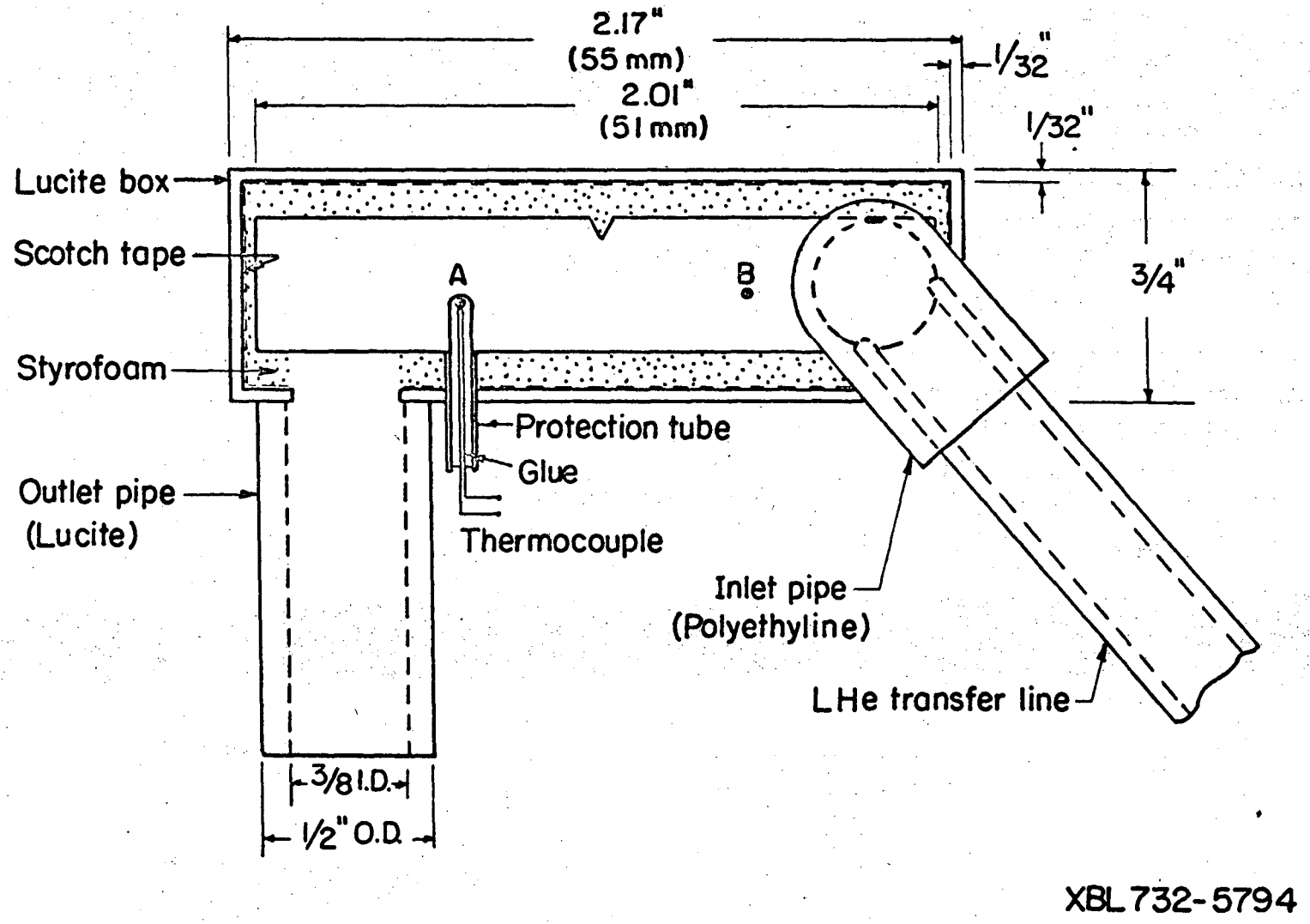
2.17"
(55 mm)
2.01"
(51 mm)
1/32"
1/32"
3/4"
Lucite box
Scotch tape
Styrofoam
A
B
Protection tube
Glue
Thermocouple
Outlet pipe
(Lucite)
Inlet pipe
(Polyethyline)
LHe transfer line
3/8 I.D.
1/2" O.D.
XBL 732-5794

Fig. 2

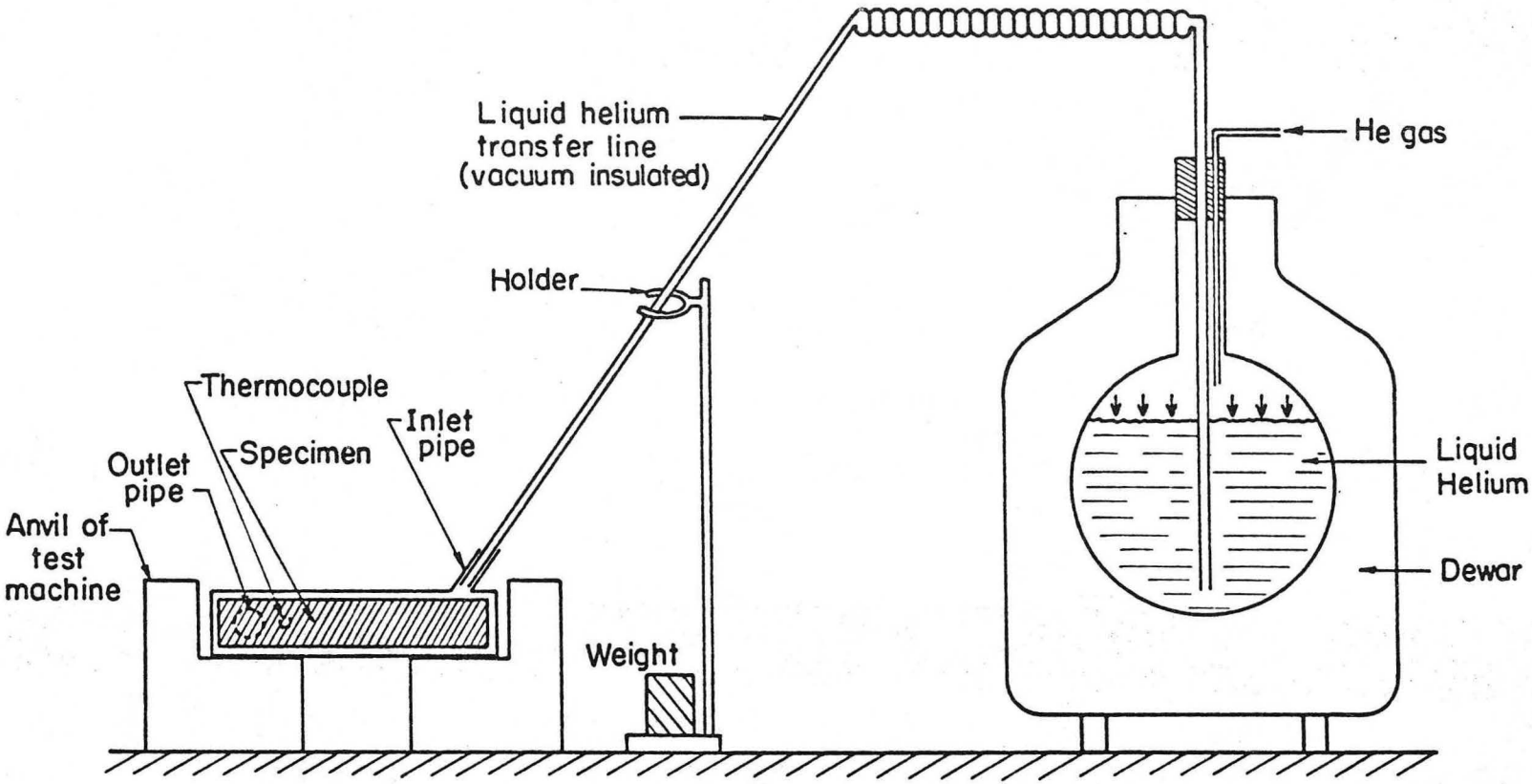

XBL 732-5793

Fig. 3

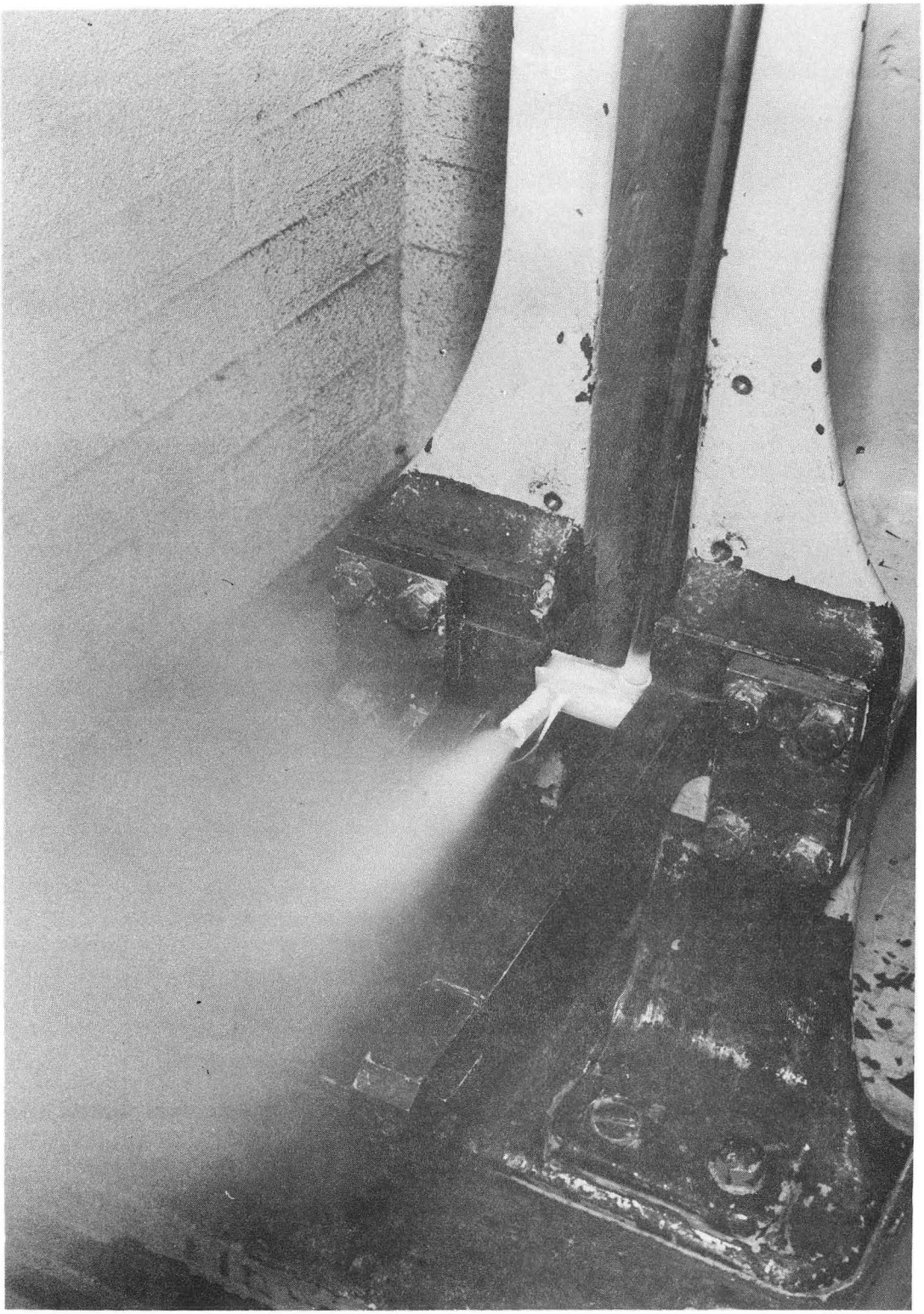

XBB 732-1136

Fig. 4

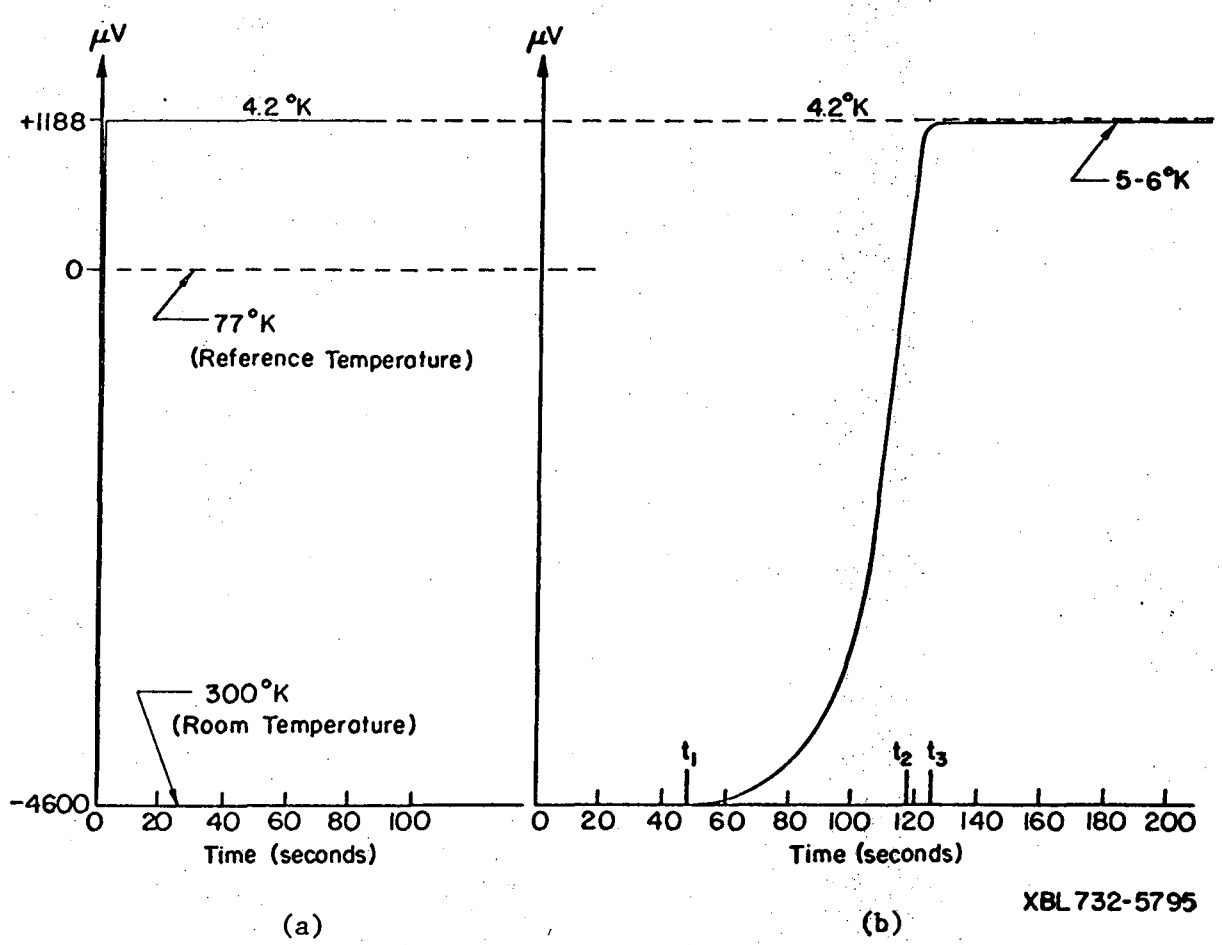
μV
+1188
4.2 °K
0
77°K
(Reference Temperature)
300°K
(Room Temperature)
-4600
0 20 40 60 80 100
Time (seconds)
(a)
μV
4.2°K
5-6°K
t1
t2 t3
0 20 40 60 80 100 120 140 160 180 200
Time (seconds)
(b)
XBL 732-5795

Fig. 5

LEGAL NOTICE

This report was prepared as an account of work sponsored by the United States Government. Neither the United States nor the United States Atomic Energy Commission, nor any of their employees, nor any of their contractors, subcontractors, or their employees, makes any warranty, express or implied, or assumes any legal liability or responsibility for the accuracy, completeness or usefulness of any information, apparatus, product or process disclosed, or represents that its use would not infringe privately owned rights.

TECHNICAL INFORMATION DIVISION
LAWRENCE BERKELEY LABORATORY
UNIVERSITY OF CALIFORNIA
BERKELEY, CALIFORNIA 94720