Published in Bull. Soc.
Chim. Belges, 81,
pp. 135-153, 1972

LBL-1487
c.1

MOLECULAR MODULATION MASS SPECTROMETRY KINETIC STUDY OF THE ClO FREE RADICAL

Ching-Hsong Wu
and Harold Johnston

June 1972

Prepared for the U.S. Atomic Energy Commission
under Contract W-7405-ENG-48

For Reference

Not to be taken from this room

LAWRENCE BERKELEY LABORATORY
UNIVERSITY OF CALIFORNIA
BERKELEY

LBL-1487
c.1

DISCLAIMER

This document was prepared as an account of work sponsored by the United States Government. While this document is believed to contain correct information, neither the United States Government nor any agency thereof, nor the Regents of the University of California, nor any of their employees, makes any warranty, express or implied, or assumes any legal responsibility for the accuracy, completeness, or usefulness of any information, apparatus, product, or process disclosed, or represents that its use would not infringe privately owned rights. Reference herein to any specific commercial product, process, or service by its trade name, trademark, manufacturer, or otherwise, does not necessarily constitute or imply its endorsement, recommendation, or favoring by the United States Government or any agency thereof, or the Regents of the University of California. The views and opinions of authors expressed herein do not necessarily state or reflect those of the United States Government or any agency thereof or the Regents of the University of California.

0 0 0 0 3 9 0 2 7 5 8

The quantity RS is relatively directly observable, equation (34). According to equation (10), the quantity $RS[O_2]$ should be linear in total concentration [M]. This relation is illustrated in figures 5 and 6.

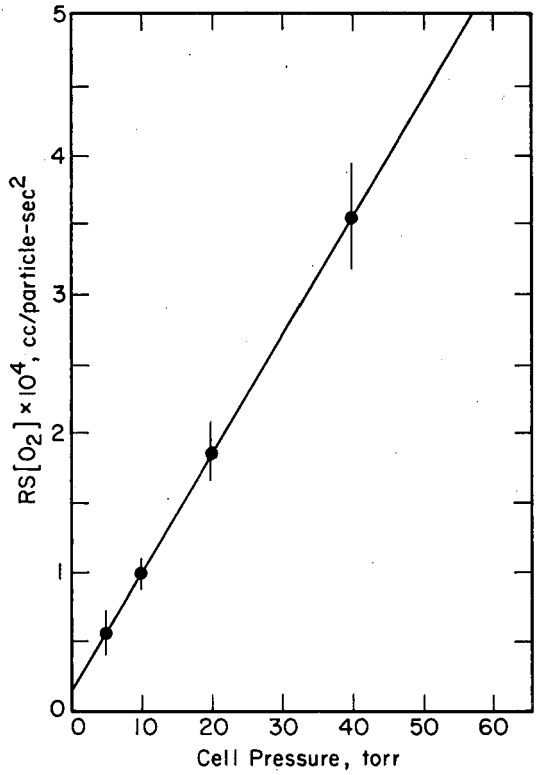

Fig. 5 — Pressure dependence of $RS[O_2]$ in a mixture of 5% Cl_2 and 95% O_2.

TABLE V

Calculated phases from fitted values of the parameter τ_y, half of life ClO, *and the calculated value of r as given in table IV*

Pressure, torr				Flashing period, sec/cycle				
Cl_2	O_2	Ar	τ_y sec	16	8	4	2	1
2	38	0	0.32	−7.3	−12.6	−22.2	− 38.8	− 60.7
1	19	0	0.62	−12.3	−21.8	−38.2	− 60.1	− 81.7
0.5	9.5	0	1.23	−21.4	−37.5	−59.4	− 81.2	−100.5
0.25	4.75	0	2.35	−36.7	−58.5	−80.5	−100.0	−119.0
0.75	6.75	0	.77	−15.2	−27.1	−46.8	− 70.9	− 94.0
0.75	6.75	5	.70	−13.0	−23.2	−41.2	− 64.5	− 90.3
0.75	6.75	17.5	.50	−10.9	−19.3	−34.9	− 58.5	− 85.0
0.75	6.75	42.5	.375	− 9.1	−15.2	−27.6	− 49.0	− 76.5

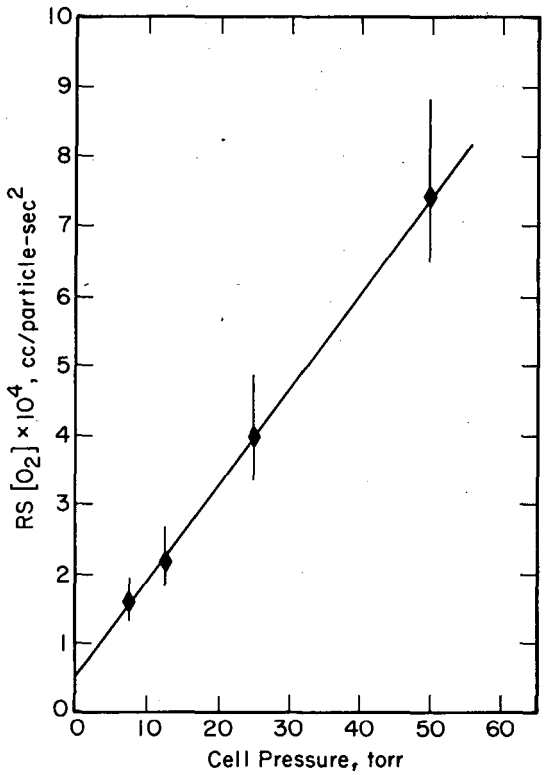

Fig. 6 — Pressure dependence of $RS[O_2]$ in a mixture: Cl_2 = 0.75 torr, O_2 = 6.75 torr, Ar added in various amounts.

DISCUSSION

By the method of flash photolysis (high light intensity, high radical concentrations) both Porter and Wright [7] and Basco and Dogra [11] found no effect of foreign gas pressure on the second-order rate constant for the decay of ClO. At low radical concentrations Clyne and Coxon [14] found a substantially different value to the rate constant from Porter and Wright. By the method of ultraviolet and infrared molecular modulation (low light intensity, low radical concentrations), it [10] was found that the ClO decay constant varied linearly with total gas pressure. The phase shifts given in figures 3 and 4 qualitatively confirm the previous result [10] that at low light intensities the second-order decay constant for ClO depends on total gas pressure (fig. 3), and it involves an inert gas effect (fig. 4). All curves in figure 3 would be superimposed if there were no total-pressure effect, and the two curves in figure 4 would be the same if there were no effect of argon. The mechanism predicts the observable quantity $RS[O_2]$, equation (10), to be linear in inert gas, and this relationship is given by figures 5 and 6. Thus, this study qualitatively agrees with the previous result [10]: at low light intensity, the rate of disappearance of ClO depends on total concentration of gases, and it

0 0 0 0 3 9 0 2 7 5 5

Bull. Soc. Chim. Belges, 81 (1972) 135-153

MOLECULAR MODULATION MASS SPECTROMETRY KINETIC STUDY OF THE ClO FREE RADICAL

CHING-HSONG WU (*) and HAROLD JOHNSTON

In complex photochemical reactions the effective mechanism may be different at low and at high light intensities, since the ratio of radicals to reactants may approach unity at high light intensities and may be 10^{-4} or less at low light intensities (such as sunlight). The method of flash photolysis has been highly successful in measuring the spectra and kinetics of free radicals in systems of high light intensities. In this laboratory a method named "molecular modulation spectrometry" has been developed, which measures the spectra and lifetimes of free-radicals in low-intensity photochemical systems. Previous versions have utilized infrared and ultra-violet spectrometry. In this article the method is extended to ion-counting mass spectrometry. The molecular-modulation mass spectrometer was used to re-investigate the kinetics of the ClO radical at low pressure and at low light intensities. Studies by flash photolysis have shown that the ClO radical decays by simple, second-order kinetics

$$\frac{-d[ClO]}{dt} = k[ClO]^2$$

This study confirms the previous result found in low intensity photolysis of Cl_2 and O_2 that the decay process is complex and dependent on inert gas

$$\frac{-d[ClO]}{dt} = (k' + k[M'']) [ClO]^2$$

The change in rate law between high and low light intensities and trends exhibited by the parameters, k' and k'', show that we still do not have a complete understanding of the mechanism of this reaction.

INTRODUCTION

Most photochemical reactions in the gas phase occur with highly reactive free radicals as short-lived intermediates. A firm understanding of these photochemical reactions demands the direct observation of the free radicals. A considerable body of data of this kind has been built up by the method of kinetic spectroscopy and flash photolysis, which uses very high intensities of photolyzing radiation, with free radical concentrations around 10^{17} molecules/cc. However, with light intensity comparable to that in sunlight, the concentration of free radicals to be expected is around 10^{11} molecules/cc. Highly sensitive methods are required to detect such low concentrations of radicals. In this laboratory we have developed a new method that is

(*) Present address: Chemistry Department, Scientific Research Staff, Ford Motor Company, Dearborn, Michigan 48121.

designed to give the spectra and chemical kinetics of radicals in this range of concentration [1]. This method uses a continuous measuring probe, infrared beam [2-4], ultraviolet beam [5], or, as reported here, the collection grid of a mass spectrometer; the photolyzing light is turned on and off at a regular controlled rate; the radicals form in the light and decay in the dark; and the continuous probe is modulated by the appearance and disappearance of radicals. This "molecular modulation" provides a differential signal that is far more sensitively observed than a direct signal. Also the step-functions of increasing products and of decreasing reactants modulate the measuring probe by about the same amount as the formation and decay of radicals. The amplitude of the modulation as a function of wave length or mass number gives the spectra of the radicals; the phase shift between photolyzing light and radical gives the lifetime, and hence the chemical kinetics, of the radical. In this article we generalize the concept of "phase shift" to include signals that are discrete, that is, ion counts in the mass spectrometer. The details of the apparatus and the method will be described in the next section.

The photolysis of Cl_2 in the presence of O_2 was studied primarily as a check on the new apparatus, since the system has been intensively studied for more than 20 years [2, 5-11]. During the course of the study, it became apparent that there remained disagreement between different investigators of the low pressure region for the reaction, $2ClO \rightarrow Cl_2 + O_2$. Porter [6] was the first to report the existence of the ClO radical in a mixture of chlorine and oxygen after flash photolysis by observing intense vibronic bands from 3100 to 2577 Å. Since its discovery, ClO has been observed in the same ultraviolet region by many investigators, [5, 7-15] with various methods of production. The electron spin resonance of the radical has been observed both in rigid solution [16] and in the gas phase [17, 18]. Infrared study by the method of matrix isolation [19] has identified the dimer, Cl_2O_2, but not the radical, ClO.

In their study of the ClO radical, Porter and Wright [7] postulated a short-lived peroxyl radical ClOO as a precursor to the ClO radical. Other indirect evidence has been presented for the existence of ClOO; [20] however, direct evidence of the existence of ClOO has been obtained only recently. Cole [21] detected an electron spin resonance ascribed to ClOO in an irradiated perchlorate single crystal, and another electron spin resonance was tentatively ascribed to it [16]. In a matrix isolation study, Rochkind and Pimentel [19] assigned a pair of infrared absorption bands to ClOO; and a positive identification of ClOO in an argon matrix was made by Arkell and Schwager [22] in an infrared study. Gaseous ClOO was observed in the infrared region by Van den Bogaerde [2] and in the ultraviolet region by Morris [5], both by the molecular modulation method.

All investigators who have studied the kinetics of ClO agree that it decays by a process second order in ClO; however, the rate constants obtained scatter over a wide range. Clyne and Coxon [14] were able to explain much of the discrepancies by assuming two competitive ClO decay processes: at high pressures ClO decays via an unstable intermediate Cl_2O_2 with a chaperone molecule M involved; at low pressures it decays via the peroxy radical ClOO as proposed by Benson and Buss. [24] This complex decay mechanism was studied and appeared to be confirmed by Morris [5]. However, a flash-photolysis reinvestigation by Basco and Dogra [11] unambiguously confirmed Porter and Wright's [7] observation of no effect by inert gases. The full

0 0 0 0 3 9 0 2 7 5 6

ten-step mechanism is given here for convenient reference

$$Cl_2 + h\nu \xrightarrow{a} Cl + Cl$$

$$Cl + O_2 + M \underset{c}{\overset{b}{\rightleftharpoons}} ClOO + M$$

$$Cl + ClOO \underset{e}{\overset{d}{\rightleftharpoons}} ClO + ClO$$

$$Cl + ClOO \xrightarrow{f} Cl_2 + O_2$$

$$ClO + ClO + M \underset{h}{\overset{g}{\rightleftharpoons}} Cl_2O2 + M$$

$$Cl_2O_2 + M \xrightarrow{i} Cl_2 + O_2 + M$$

$$Cl + Cl + M \xrightarrow{j} Cl_2 + M$$

This ten-step mechanism involves 4 reaction intermediates, Cl, ClOO, ClO, Cl_2O_2. Since only ClOO and ClO were observed, the effect of Cl and Cl_2O_2 had to be eliminated by approximations and assumptions [10]. In particular, it was assumed that Cl and ClOO were in equilibrium and that ClO and Cl_2O_2 were in equilibrium:

$$K_1 = \frac{b}{c} = \frac{[ClOO]}{[Cl]\,[O_2]} \tag{2}$$

Further assumptions were made that

$$e\,[ClO]^2 \ll a I_0\,[Cl_2] \tag{3}$$

$$e\,[ClO]^2 \ll \{(d+f)+j\,[M]/K_1\,[O_2]\}\,[ClOO]^2$$

$$4\,K_3\,[ClO] \ll 1\,.$$

With these assumptions the rate expressions were reduced to the tractable form

$$\frac{d\,[ClOO]}{dt} = P - Q\,[ClOO]^2 \tag{4}$$

$$\frac{d\,[ClO]}{dt} = R\,[ClOO]^2 - S\,[ClO]^2 \tag{5}$$

where

$$P = \frac{2aI_0[Cl_2]K_1[O_2^{\cdot}]}{1+K_1[O_2]} \tag{6}$$

$$Q = \frac{2(d+f+j[M]/K_1[O_2])}{1+K_1[O_2]} \tag{7}$$

$$R = 2\,d/K_1[O_2] \tag{8}$$

$$S = 2(e+iK_3[M]) \tag{9}$$

The concentrations of O_2, Cl_2, and M are assumed to be constant, during a given experiment, since their concentrations are four to six orders of magnitude higher than those of the radicals. The quantity $RS[O_2]$ is relatively directly observed [10], and according to the mechanism it is given by

$$RS[O_2] = 4\,de/K_1 + (4\,idK_3/K_1)[M] \tag{10}$$

The present study focused particularly on the observation of $RS[O_2]$, since it contains the foreign-gas dependent feature wherein most disagreement is located [10, 11, 14].

APPARATUS

A schematic diagram of the apparatus is shown in figure 1. The photolyzing light was a 500 watt mercury arc lamp, filtered by Corning 9863 and 0160 filters immersed in a heat-removing solution of 0.1 M $CuSO_4$, passing a band between 3200 and 3800 Å. A rotating disk chopped the beam to give a square-wave photolyzing beam in the reaction cell. The chopper blade was driven by a Bodine synchronous motor coupled with a multiratio gear box to provide six different periods of rotation, 1, 2, 4, 8, 16 and 32 sec/cycle. A reference signal was provided by a small projector light and a phototransistor placed on the opposite side of the blade from the photolyzing beam. The reaction cell (98 cc volume) was constructed of Pyrex with a quartz window fused on the rear through a graded seal. The front end was hemispherical in shape with a pin hole 33 μm in diameter to allow reaction gases to leak into the mass spectrometer. The pin hole was finished by grinding with a tapered copper rod to give a short, round, flared exit. After the gases left the reaction cell via the pin hole leak, they spread into an intermediate vacuum chamber, and a small portion intersected a "skimmer" to enter the high vacuum chamber of the mass spectrometer as a molecular beam. The size of the skimmer hole, angles of its opening, and its distance from the pin hole of the reaction cell were designed [25] to optimize the beam intensity and to avoid standing shock waves from blocking the entrance to the mass spectrometer. The intermediate chamber was evacuated by a Welch 1402B mechanical pump, NRC-4-SP type 121 diffusion pump, and a liquid nitrogen trap; during experiments its steady state pressure was just below 10^{-4} torr. The main chamber of the mass spectrometer was evacuated by a Marvac IDR2 mechanical pump, a 6 inch ultra-high vacuum CVC diffusion

pump including water cooled chevron baffles and type TSMU sorbent trap. Also, a type PDV-2 ion pump was installed, but it was not operated during experiments because it introduced a substantial amount of noise to the electron multiplier. During experiments the chamber pressure was below 6×10^{-7} torr.

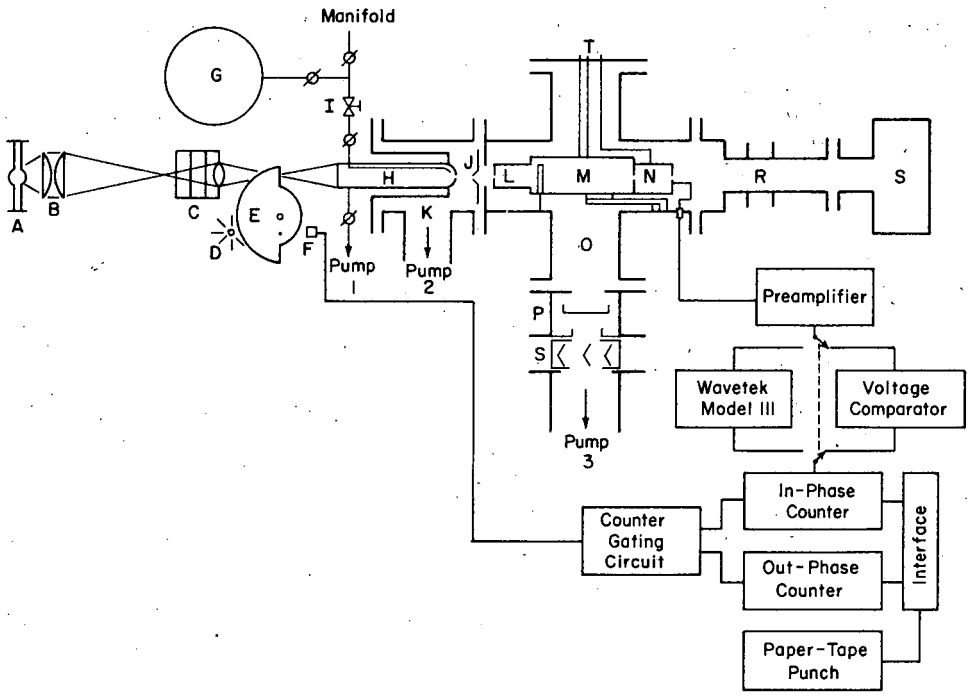

Fig. 1 — Schematic Diagram of Apparatus *A*, UV source; *B*, quartz lens; *C*, glass filter; *D*, reference light; *E*, chopper; *F*, photo-transistor; *G*, gas storage bulb; *H*, reaction cell; *I*, flow control valve; *J*, skimmer; *K*, middle chamber; *L*, ionization chamber; *M*, quadrupole mass filter; *N*, electron multiplier; *O*, main vacuum chamber; *P*, sorbent trap; *Q*, baffles; *R*, bellows; *S*, ion pump; *T*, radiofrequency leads.

The mass spectrometer was of the quadrupole type, Extra-nuclear Laboratories, model 324, with a type II high efficiency electron-impact ionizer. Because of serious attack on the tungsten filament by chlorine and oxygen, it was replaced by a rhenium wire; 0.018 cm diameter. Six holes, 0.25 cm diameter, were drilled around the filament shield case to increase pumping speed in the ionization zone. The system was aligned so that the pin hole, the skimmer, the ionization zone, and the axis of the mass spectrometer were all in a straight line. Ions were detected by an electron multiplier, closely coupled to a bakeable preamplifier with 10^7 ohm input resistance, which gave a frequency response from DC to 100 kHz.

In the reaction cell, reactants and products were present typically in amounts 4 to 6 orders of magnitude higher than free radical intermediates. To cover this very wide range, we measured free radicals by a direct ion counting technique, and reactants

by analogue, current measuring methods [5] Circuit constants were such that the ion counting method was useful for constituents in the reaction cell between 10^{10} and 10^{15} molecules/cc, and the analogue method was useful from 10^{14} to 10^{18} molecules/cc. An ion event was amplified by the electron multiplier to give a pulse in the preamplifier. The pulses were passed into a voltage comparator that rejected as noise pulses below a certain level and sent higher pulses into a "one shot" circuit, which converted them to a uniform height of 4 volts and a uniform width of 5 μsec. The complete period, T, of a cycle of photolysis, light and dark portions, was precisely divided into 4 equal parts: 0 to $T/4$ (light on), $T/4$ to $T/2$ (light on), $T/2$ to $3T/4$ (light off), $3T/4$ to T (light off). Pulses from the "one shot" circuit were passed to two Hewlett-Packard model H19-5280 A reversible counters, one adding from 0 to $T/2$ and subtracting from $T/2$ to T, called the in-phase counter and the other adding from $T/4$ to $3T/4$ and subtracting during the other intervals, called the out-phase counter. To record the mass spectrum at a given mass number, a large number of cycles of photolysis was accumulated in the counters. It is very important to have the time for counting positively to be exactly equal to the time of negative counting; otherwise unbalanced counts will accumulate after many cycles. The timing system had an accuracy of one part per million for 30 seconds of averaging time. After completing a pre-set number of complete cycles, the counting stopped, and the net counts from each counter were puched out on paper tape. Later the paper tape was fed into a computer, which calculated the desired functions (see section on Theory of Kinetic Measurements). Analogue signals were processed and recorded by the method of Morris and Johnston [26].

THEORY OF KINETIC MEASUREMENTS

The relation between the number of ions counted by the system and the concentration of a species of interest in the reaction cell can be expressed in the general form

$$Z = pCt + \sum_i p_i B_i t + Nt \tag{11}$$

where

Z number of ions counted in time t;
C concentration of observed species in the reaction cell in units of molecules/cc;
p a proportionality constant between observed counts per second and concentration in molecules/cc, which is a function of several factors, intensity and energy of the ionizing electron beam, geometrical factors of the molecular beam from the reaction cell to the ionization chamber, the collection efficiency of the detector, etc.;
B_i concentration of background gas i that gives a fragment at the same m/e as the observed species;
N random noise per unit time.

By feeding the output signal into the in-phase counter, which counts up while the photolysis lamp is on, 0 to $T/2$, and which counts down while the photolysis lamp is

off, $T/2$ to T, the number of counts shown on the counter after n complete cycles is

$$Z_1 = np\left(\int_0^{T/2} C\,dt - \int_{T/2}^{T} C\,dt\right) + \\ + n\sum_i p_i\left(\int_0^{T/2} B_i\,dt - \int_{T/2}^{T} B_i\,dt\right) + \\ + n\left(\int_0^{T/2} N\,dt - \int_{T/2}^{T} N\,dt\right) \tag{12}$$

If the concentration of the observed species is correlated with the exciting light, the integrals involving C will be non-zero, and a finite signal will accumulate after many cycles. However, the background gases remain steady, and the noise occurs randomly, uncorrelated with the exciting light. Thus these quantities will tend to be cancelled out between 0 to $T/2$ and $T/2$ to T and become negligible after a large number of cycles. After a large number of cycles, the observed count approaches (compare ref. [3]).

$$Z_1 = np\left(\int_0^{T/2} C\,dt - \int_{T/2}^{T} C\,dt\right) \tag{13}$$

Similarly, the net count per cycle obtained from the out-of-phase counter approaches

$$Z_2 = np\left(\int_{T/4}^{3T/4} C\,dt - \int_{3T/4}^{T} C\,dt - \int_0^{T/4} C\,dt\right) \tag{14}$$

These two numbers, Z_1 and Z_2, are the keys to this dual, "digital lock-in" method. The two numbers represent signals 90 degrees out of phase with each other, and they thus constitute a useful and meaningful orthogonal, Cartesian coordinate system, Z_1 as abscissa and Z_2 as ordinate.

For a simple photochemical reaction with a single free-radical intermediate R, reactant A, and product P, it is readily shown (compare reference 1) that the signs of Z_1 and Z_2 uniquely identify the species being observed, as follows:

Z_1	Z_2	Observed species;
0	−	Primary photochemical reactant A;
+	−	Reactant A, destroyed by light and attacked by R;
−	−	Reactant A, destroyed by light and reformed by R;
+	+	Radical R;
−	+	Product, P produced by R;
0	+	Product of primary photochemical reaction.

For this simple mechanism, the observed values of Z_1 and Z_2 give directly the liftime and the concentration (if p is known) of the radical in the system. For more complicated mechanisms, an indirect procedure must be followed, as given below.

In this digital, lock-in system, it is not necessary to go beyond Z_1 and Z_2; however, this method is a generalization of the "phase-shift" method [1-5, 26-29] used for fluorescence kinetics and used previously by us in molecular-modulation kinetics.

The relation of this all-digital method and the phase shift method will now be given. In fact, the photolyzing light is either on, with intensity I_m, or off, with zero intensity. The phase-shift method takes this square wave signal, extracts the fundamental and approximates the photolysis light as

$$I = (I_m/2)\,(1+\sin 2\pi t/T) \tag{15}$$

The free-radical intermediate varies in a complex way depending on the kinetics of the system, tending to build up toward a maximum, steady-state concentration C_s in the light and tending to fall to zero in the dark. The phase-shift method extracts the fundamental component of this complex function and express it as

$$C = (C_s/2)\,[1+\alpha \sin(2\pi t/T+\phi)] \tag{16}$$

where ϕ is the phase-shift between exciting light and radical species, and α is the ratio of the modulation amplitude C_m to the steady-state amplitude C_s of the radical. If the function (16) is substituted into the defining equations (13) and (14) for Z_1 and Z_2, we obtain

$$Z_1 = p\,nT(C_m/\pi)\cos\phi \tag{17}$$

$$Z_2 = -\,p\,nT(C_m/\pi)\sin\phi \tag{18}$$

The phase-shift ϕ is readily evaluated in terms of Z_1 and Z_2

$$\phi = -\tan^{-1} Z_2/Z_1 \tag{19}$$

and the modulation amplitude is

$$C_m = (\pi/pnT)\,(Z_1^2+Z_2^2)^{\frac{1}{2}} \tag{20}$$

The modulation amplitude relative to the maximum, steady-state value is

$$\alpha = C_m/C_s = \frac{(Z_1^2+Z_2^2)_m^{\frac{1}{2}}}{(Z_1^2+Z_2^2)_s^{\frac{1}{2}}} \tag{21}$$

where it is understood that the two pairs of measurements are taken for the same length of time, nT. If the Cartesian coordinates Z_1 and Z_2 are transformed to plane polar coordinates ρ and ϕ

$$\rho = (Z_1^2+Z_2^2)^{\frac{1}{2}} \tag{22}$$

$$\phi = -\tan^{-1} Z_2/Z_1 \tag{23}$$

it is seen that the complete, digital method expressed as plane polar coordinates gives identical results as the phase-shift method for phase ϕ and relative amplitude, α. The square-wave, digital-count method is a generalization of the phase-shift method and includes it as a special case. We prefer the digital lock-in method where it can be used, because, in the language of fourier analysis, it is undesirable to throw away the information contained in the higher harmonics of the fundamental frequency. For a specific example, the digital, exact method gives a sharper distinction between first-order and second-order decay of radicals than the phase-shift method.

The mechanism given in the introduction for the ClOO and ClO radicals leads to equations of the form (compare eq. 4 and 5)

$$\frac{dX}{dt} = P - QX^2 \qquad \text{in light} \tag{24}$$

$$= -QX^2 \qquad \text{in dark} \tag{25}$$

$$\frac{dY}{dt} = RX^2 - SY^2 \tag{26}$$

where P, Q, R and S are complex quantities, which, however, are constant during a given experiment. Although the first two equations can be solved analytically, it appears to us that the last cannot; and thus it is useful to go to a numerical and graphical solution for this problem. A computer program based on Adam's iterative integration method [30] with variable time elements was set up. Sets of the rate parameters, P, Q, R, and S, were systematically assumed, and for each set X and Y were determined by a series of successive approximations. To start, X and Y were set at zero at zero time. The values of X and Y at the end of a complete cycle of photolysis were compared with their values at the beginning of the cycle. If they differed by more than one per cent, the final values became the input values for another iteration. If the differences were less than one per cent, amplitudes and phase shifts were calculated from the computer concentration profiles from 0 to T. The reliability of the method was confirmed by comparing the resulting phase shifts of X with those obtained by exact solution of equations (24) and (25); the agreement was always within one per cent over the entire range from 0 to $-90°$.

The next problem is to obtain the rate parameters, P, Q, R, and S, from observed phases and amplitudes. The constant P is obtained directly from reactant concentration and photolyzing light intensity; and thus there are three unknowns, Q, R, and S. One could assume sets of values of Q, R, and S and compare calculated phases and amplitudes with experimental results until a best fit is found for all modulation frequencies—but such a procedure is very time consuming and inefficient. A systematic numerical-graphical method is much more useful. For very long photolysis periods T, the radicals, X and Y, reach their steady-state concentrations

$$C_s(X) = (P_x/2)\,(P/Q)^{\frac{1}{2}} \tag{27}$$

$$C_s(Y) = (P_y/2)\,(PR/QS)^{\frac{1}{2}} \tag{28}$$

and under these conditions the radical half-lives are

$$\tau_x = 1/(PQ)^{\frac{1}{2}} \tag{29}$$

$$\tau_y = (Q/PRS)^{\frac{1}{2}} \tag{30}$$

Under other conditions of short photolysis periods, the phase of radical X depends only on τ_x, but the phase of radical Y depends on both τ_x and τ_y. We define the

ratio of half lives (based on steady-state radical concentrations) as

$$r = \tau_x/\tau_y = (RS)^{\frac{1}{2}}/Q \tag{31}$$

and the ratio of photolysis period T to half-life of Y is

$$s = T/\tau_y \tag{32}$$

From the computer program described above, a master chart was prepared of the phase of Y as a function of s for various values of r, figure 2. Experimental data are plotted on a chart of the same scale with phase shift of Y as ordinate and photolysis period T as abscissa. By sliding the observed chart over the master chart along the horizontal (but not vertical) scale, the observed points are fitted to a particular curve, giving τ_x/τ_y, and the correspondence between T and T/τ_y gives τ_y. Thus the separate values of τ_x and τ_y are obtained, and together with the known value of P, one obtains

$$Q = 1/P\tau_x^2 \tag{33}$$

$$RS = Q/P\tau_y^2 \tag{34}$$

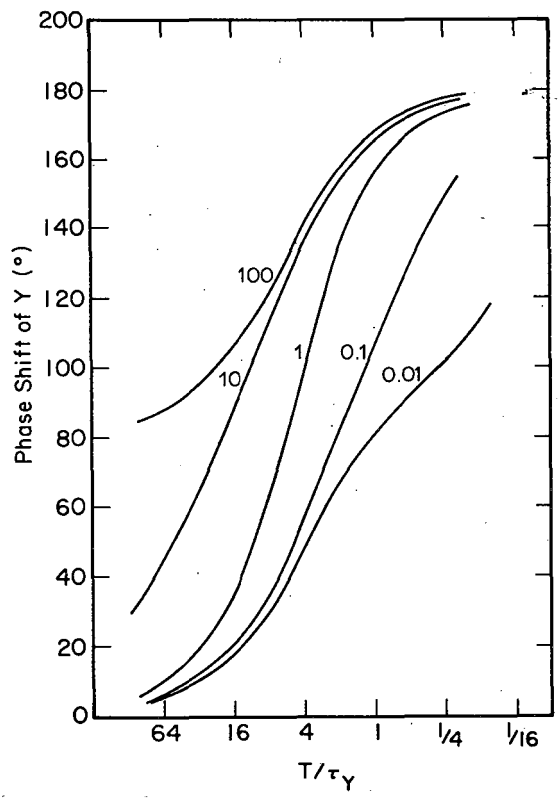

Fig. 2 — Phase shift of a second-generation radical Y as a function of the ratio of the flashing period T to the half-life of Y for various ratios of half-life of X to half-life of Y (compare eqs. 24-34).

The resolution of R and S requires the steady-state amplitude of Y and its calibration constant p.

EXPERIMENTS AND RESULTS

Matheson research grade Cl_2 and O_2 and high purity Ar were used directly without further purification. Gas mixtures of appropriate proportions were stored in a 5 liter glass bulb, painted black to prevent photo-reaction from room lights. Grease-free stop cocks were used throughout the system. Except for stainless steel in the flow-control valves and certain fittings, all surfaces were glass and Teflon from storage bulb to reaction cell. The pressure of the gas reaction mixture in the reaction cell was controlled by a Granville-Phillips series 9100 variable leak valve and was monitored by a Pace model CD-25 pressure transducer. At a cell pressure of 10 torr the typical gas flow rate was 0.008 standard cc/sec or 2×10^{17} molecules/sec, and the leak rate from the pin hole was 1.5×10^{16} molecules/sec, of which about one per cent passed through the skimmer for analysis. Five chopping speeds for the photolytic light were used: 16, 8, 4, 2 and 1 sec/cycle. For each chopping speed, from 3 to 30 measurements were taken, and each measurement involved 160 to 1600 seconds of integration time. Data were taken for both ascending and descending chopping speeds, and no significant difference was found. The photolyzing light flux was determined by NO_2 photolysis, and by a detailed comparison of absorption cross section between NO_2 and Cl_2 over the range of photolyzing light. The effective cross sections for light absorption in this range were found to be 4.65×10^{-19} cm^2 for NO_2 and 1.44×10^{-19} cm^2 for Cl_2. The photolyzing light flux was 1.35×10^{17} photons/cm^2 sec.

A preliminary experiment was done with a reaction mixture of $Cl_2/O_2 = 1/19$ at 20 torr flashed at a speed of 16 sec/cycle. Results are given in table I. Using the ion-counting method, we observed strong modulation signals at mass-to-charge raties (m/e) of 51 and 53. The phase shifts were identical for both signals, and the amplitude at $m/e = 51$ was three times that at $m/e = 53$, very strongly indicating it to be ^{35}ClO and ^{37}ClO. The phase of the signal at $m/e = 51$ did not change when the ionization energy was reduced from 40 to 20 volts, indicating that the signal was not a superposition of one mass number from two different molecules. To check against the possibility of thermal-acoustical modulations at all mass numbers, we added one-tenth per cent of Ar and searched for a modulation signal at $m/e = 40$. As can be seen in table I, the amplitudes were very small and the phases were random. A weak modulation signal was found at $m/e = 67$, table II. The small phase shift, -6.7 degrees, is kinetically correct for the ^{35}ClOO radical. Attempts were made to detect $^{35}Cl_2O_2$ ($m/e = 102$) and $^{35}Cl_2O$ ($m/e = 86$), but no modulation signals were obtained.

Two series of systematic experiments were performed to measure the pressure dependence and inert gas effect on the ClO disappearance rate. In one series the ratio Cl_2/O_2 was maintained at 1/19, the total pressure was varied from 40, 20 10 to 5 torr, and the chopping speeds were 16, 8, 4, 2 and 1 sec/cycle. In the second series the reactants were held constant ($Cl_2 = 0.75$ torr, $O_2 = 6.75$ torr), and Ar was varied as 0, 5, 17.5, and 42.5 torr to give total pressure of 7.5, 12.5, 25, and 50 torr. The phases for

TABLE I

Comparison of modulated signal of ClO *and unmodulated signal of* Ar

m/e	Electron energy	(Cl_2)	(O_2)	(Ar)	Chopping period	No. cycle	In-phase counter	Out-phase counter	Amplitude	Phase
	volts	torr	torr	torr	sec/cyc	cyc	count	count	count/sec	degree
51	40	1	19	0	16	10	31490	9961	206	−17.5
							31099	8068	201	−14.5
							33639	9463	218	−15.7
							29815	8212	194	−15.4
									Ave 205	−15.8
53	40	1	19	0	16	10	11083	2958	73	−15.2
							9506	3231	64	−17.9
							10696	2571	69	−13.3
							11885	3325	77	−16.2
									Ave 71	−15.7
51	20	1	19	0	16	20	23213	5953	77	−14.3
							25668	7748	91	−16.8
							23775	7038	79	−15.4
							24010	8575	84	−17.9
									Ave 83	−16.1
40	40	1	18.98	0.02	16	10	−272	−301	1.8	+131.7
							−163	421	2.8	−111.2
							+75	+198	1.2	−69.5
							+336	−219	1.3	+33.0
							−139	+284	2.0	−116.1
									Ave 1.8	−26.5

TABLE II

Comparison of modulated signal of ClOO *and* ClO

m/e	Electron energy	(Cl_2)	(O_2)	(Ar)	Chopping period	No. cycle	In-phase signal	Out-phase signal	Amplitude	Phase
	volts	torr	torr	torr	sec/cyc	cyc	count	count	count/sec	degree
67	40	2	38	0.04	1	800	14206	1569	18	−6.3
							16983	2442	21	−8.2
							24733	2195	24	−5.1
							11825	1496	15	−7.2
									Ave 19	−6.7
51	40	2	38	0.04	1	200	37295	48872	307	−52.7
							36142	49102	304	−53.5
							36998	47767	295	−52.2
							35872	49413	306	−54.3
									Ave 303	−53.2

both of these series are given in table III, and some of the data are plotted in figures 3 and 4 as phase versus flashing frequency.

TABLE III

Observed phases as a function of chopping frequency and concentrations

Pressure, torr				Flashing period, sec/cycle				
Total	Cl_2	O_2	Ar	16	8	4	2	1
40	2	38	0	−10.8	−15.5	−23.4	−36.7	−53.1
20	1	19	0	−15.9	−24.3	−36.3	−60.9	−76.3
10	0.5	9.5	0	−21.6	−34.5	−53.8	−77.1	−96.4
5	0.25	4.75	0	−40.7	−63.1	−74.5	−91.3	—
7.5	0.75	6.75	0	−20.5	−30.1	−45.5	−66.0	−80.5
12.5	0.75	6.75	5	−17.0	−23.5	−39.8	−61.3	−78.8
25.0	0.75	6.75	17.5	−13.7	−17.8	−33.1	−54.8	−75.4
50.0	0.75	6.75	42.5	− 6.4	−11.7	−26.5	−46.1	−67.0

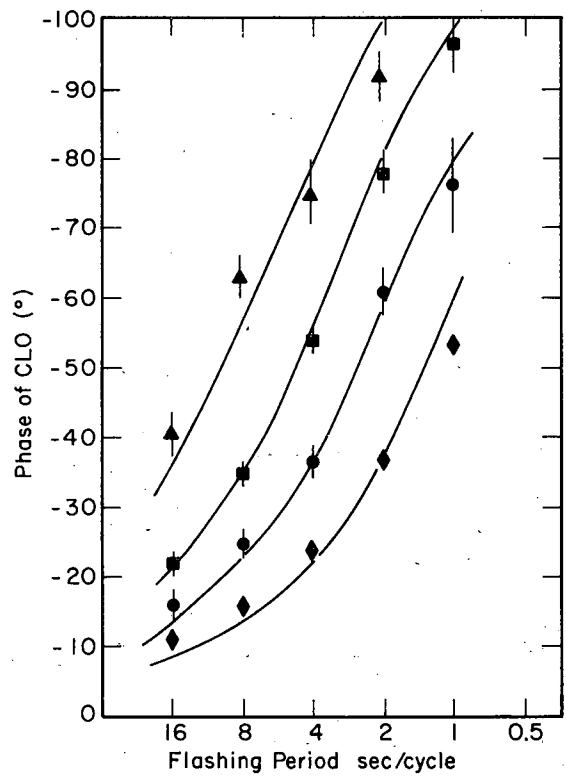

Fig. 3 — Observed points and calculated curves for the phase shift of ClO in a mixture of 5% Cl_2 and 95% O_2. Total pressures in torr: ♦, 40; ●, 20; ■, 10; ▲, 5.

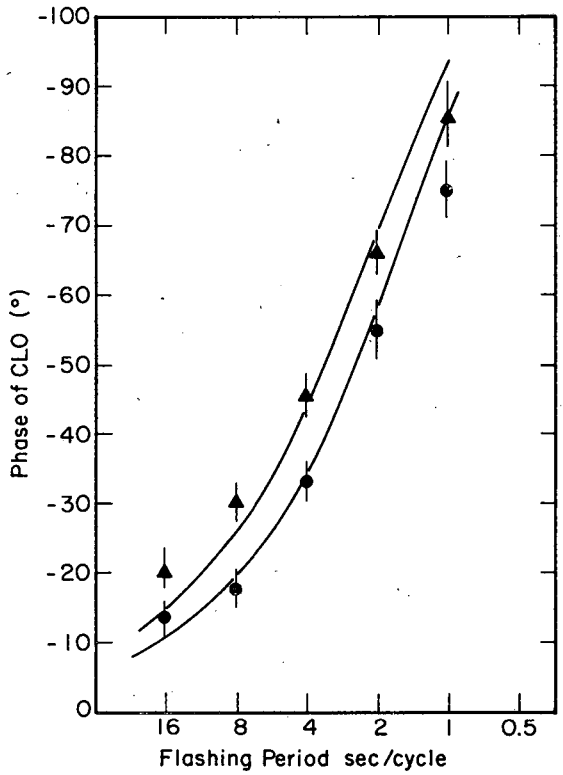

Fig. 4 — Observed points and calculated curves for the phase shift of ClO in a mixture of Cl_2 = 0.75 torr, O_2 = 6.75 torr, and Ar in torr: ●, 17.5; ▲, zero.

TABLE IV

Evaluation of rate parameters from observed ClO *half life and literature values of P and Q*

Total pressure	$10^{-17}[O_2]$	τ_y sec	$10^{-12}P$	$10^{10}Q$	$10^{22}RS$	$10^4RS[O_2]$	$r^{calc.}$ eq. 31	τ_x sec
40	12.3	0.32	11.15	3.22	2.80	3.54±0.4	.0520	.017
20	6.15	0.62	2.78	3.22	3.02	1.86±0.2	.0538	.033
10	3.07	1.23	0.696	3.22	3.10	0.93±0.08	.0545	.067
5	1.53	2.35	0.174	3.22	3.40	0.52±0.1	.057	.134
7.5	2.18	.77	0.75	3.21	7.30	1.60±0.2	.084	.065
12.5	2.18	.70	0.75	3.26	8.90	1.94±0.4	.0915	.064
25.0	2.18	.50	0.75	3.38	1.800	3.94±0.7	.125	.063
50.0	2.18	.375	0.75	3.62	34.0	7.45±1.2	.161	.061

$[O_2]$, particle/cc
P, particle/cc−sec.
Q, cc/particle−sec.
RS, $cc^2/particle^2-sec^2$.

0 0 3 9 0 2 / 5 9

appears that there is a change in effective mechanism between high and low light intensities.

The plot of $RS[O_2]$ against total pressure, [M], should give a straight line of slope $4idK_3/K_1$ and intercept $4de/K_1$. For the series of runs with 5 per cent Cl_2 in O_2, the quantity $RS[O_2]$ is plotted against total pressure in figure 5; and for the series with constant Cl_2 and O_2 but with varied Ar, the same type of plot is given by figure 6. From the slopes of these two lines, we obtain a directly observed parameter for comparison with the corresponding value from reference 10

$$diK_3/K_1 = 0.69 \times 10^{-22} \qquad \text{(fig 5)}$$

$$diK_3/K_1 = 1.05 \times 10^{-22} \qquad \text{(fig. 6)}$$

$$diK_3/K_1 = 0.20 \times 10^{-22} \qquad \text{[ref. 10]}$$

The intercepts from the two plots give the values

$$de/K_1 = 0.39 \times 10^{-5} \qquad \text{(fig. 5)}$$

$$de/K_1 = 1.24 \times 10^{-5} \qquad \text{(fig. 6)}$$

$$de/K_1 = 0.25 \times 10^{-5} \qquad \text{[ref. 10]}$$

The quantitative agreement between the present study and the previous studies of this reaction is very poor. In this study the M-gas effect with added argon, figure 6, is similar in shape but different in numerical values from that with pure reactants, figure 5. Clyne's [14] direct observation of reaction *e* gives a rate constant larger than we obtain by extrapolation to zero pressure. To account for these discrepancies, it appears that one of the following alternatives must apply: (1) this study and that of reference 10 involve a pressure-dependent systematic error, (2) the simplifying assumptions, equations 2 and 3 may be incorrect, or (3) the mechanism may need to be revised. Possibilities of these alternatives are discussed below.

A pressure dependent systematic error to be suspected is surface destruction of ClO radicals. However, a detailed analysis [31] indicated negligible surface reactions by ClO.

The qualitative discrepancy between results at high radical concentrations and low radical concentrations and the quantitative discrepancies between different investigators at low radical concentrations strongly indicate that the mechanism is inadequate or incorrect. Our first thought was that we should add another M-gas dependent step, but our second thought is that perhaps we already have too many such steps in the mechanism (Cl_2O_2 may be unnecessary to explain the data). The trouble may lie in the simplifying assumptions that we made, equations 2 and 3.

The simplifying assumptions, equations 2 and 3, seemed to be the minimum required to solve the problem by this method; but they are probably too severe to describe the real situation. If we omit the intermediate Cl_2O_2, the differential equation for the sum of "odd chlorine", Cl, ClOO, and ClO, is:

$$\frac{d([Cl]+[ClOO]+[ClO])}{dt} = 2aI_0[Cl_2] - 2f[Cl][ClOO] - 2j[M][Cl]^2 \quad (35)$$

The differential equation for ClO is

$$\frac{d[\mathrm{ClO}]}{\mathrm{d}t} = 2d[\mathrm{Cl}][\mathrm{ClOO}] - 2e[\mathrm{ClO}]^2 \tag{36}$$

The steady-state concentration of ClOO is

$$[\mathrm{ClOO}]_s = \frac{b[\mathrm{M}][\mathrm{O_2}][\mathrm{Cl}] + e[\mathrm{ClO}]^2}{(d+f)[\mathrm{Cl}] + c[\mathrm{M}]} \tag{37}$$

The mechanism gives a rapid interchange between Cl, ClOO and ClO. The rate expression for the full set, [Cl]+[ClOO]+[ClO], includes the M-dependent recombination of chlorine atoms, J. The equation for the species ClO, equation (36), includes $e[\mathrm{ClO}]^2$ and a term in [Cl] [ClOO]. As can be seen by equation (37), the steady-state relation between Cl and ClOO depends on the level of chlorine atom concentration and on M. Our assumption [10] that Cl is in equilibrium with ClOO thus could give a systematic, M-dependent error.

The mechanism as presented here does not seem to give the correct limiting forms: $k[\mathrm{ClO}]^2$ at high light intensity and $k'[\mathrm{ClO}]^2 + k''[\mathrm{M}][\mathrm{ClO}]^2$ at low light intensity with self-consistent rate constants throughout. We thick that the M-gas dependence that shows up at low light intensities comes from reactions such as b, c, and j, not the species Cl_2O_2. At present we do not have a mechanism that covers all observations. We recommend that further thought be given to such a general mechanism.

ACKNOWLEDGEMENT

We are grateful for support of this work: by the Environmental Protection Agency, Air Pollution Control Office, of the U.S. Public Health Service as Research Grant AP-00104; by the College of Chemistry, University of California, Berkeley; by way of technical assitance from the Inorganic Materials Research Division of the Lawrence Radiation Laboratory; and from the University of California Committee on Research.

UNIVERSITY OF CALIFORNIA
Department of Chemistry
Berkeley, California 94720

REFERENCES

[1] Johnston, H.S., McGraw, G.E., Paukert, T.T., Richards, L.W. and Van den Bogaerde, J., *Proc. Natl. Acad. Sci. U.S.*, 57 (1967) 1146.
[2] Van den Bogaerde, J., Ph.D. Thesis, 1968, Univ. of Calif. Berkeley.
[3] McGraw, G.E. and Johnston, H.S., *J. Chem. Kinetics*, 1 (1969) 89.
[4] Paukert, T.T., Ph.D. Thesis, 1969, Univ. of Calif. Berkeley.
[5] Morris, E.D., Jr., Ph.D. Thesis, 1969, Univ. of Calif. Berkeley.
[6] Porter, G., *Proc. Roy. Soc.*, A200, (1950) 284. *Disc. Faraday Soc.*, 9 (1950) 60.
[7] Porter, G. and Wright, F.J., *Disc. Faraday Soc.*, 14 (1953) 23.
[8] Durie, R.A. and Ramsay, D.A., *Can. J. Phys.*, 36 (1958) 35.
[9] Burns, G. and Norrish, R.G.W., *Proc. Roy. Soc.*, A271 (1963) 289.

[10] Johnston, H.S., Morris, E.D., Jr. and Van den Bogaerde, J., *J. Am. Chem. Soc.*, 91 (1969) 7712.
[11] Basco, N. and Dogra, S.K., *Proc. Roy. Soc. Lond.*, A323 (1971) 29.
[12] Lipscomb, F.J., Norrish, R.G.W. and Thrush, B.A., *Proc. Roy. Soc.*, A233 (1956) 455.
[13] Edgecomb, F.H.C., Norrish, R.G.W. and Thrush, B.A., *Proc. Roy. Soc.*, A243, (1957) 24.
[14] Clyne, M.A.A. and Coxon, J.A., *Trans. Faraday Soc.*, 62 (1966) 2175. *Trans. Faraday Soc.*, 62 (1966) 1175. *Proc. Roy. Soc.*, A303 (1968) 207.
[15] McGrath, W.D. and Norrish, R.G.W., *Proc. Roy. Soc.*, A254 (1960) 317.
[16] Eachus, R.S., Edwards, P.R., Subramanian, S. and Symons, M.C.R., *Chem. Commun.*, (1967). 1036 *J. Chem. Soc. A.*, (1968) 1704.
[17] Carrington, A. and Levy, D.H., *J. Chem. Phys.*, 44 (1966) 1298.
[18] Carrington, A., Dyer, P.N. and Levy, D.H., *J. Chem. Phys.*, 47 (1967) 1756.
[19] Rochkind, M.M. and Pimentel, G.C., *J. Chem. Phys.*, 46 (1967) 4481; Alcock, W.G. and Pimentel, G.C., *J. Chem. Phys.*, 48 (1968) 2373.
[20] Benson, S.W. and Anderson, K.H., *J. Chem. Phys.*, 31 (1959) 1082.
[21] Cole, T., *Proc. Natl. Acad. Soc. U.S.*, 46 (1960) 506.
[22] Arkell, A. and Schwager, I., *J. Am. Chem. Soc.*, 89 (1967) 5999.
[23] Morris, E.D., Jr. and Johnston, H.S., *J. Am. Chem. Soc.*, 90 (1968) 1918.
[24] Benson, S.W. and Buss, J.H., *J. Chem. Phys.*, 27 (1957) 1382.
[25] Bier, K. and Hagena, O., In *Rarefied Gas Dynamics*, ed. J.A. Laurmann (1963), Academic Press, New York.
[26] Morris, E.D., Jr. and Johnston, H.S., *Rev. Sci. Instr.*, 39 (1968) 620.
[27] Yardley, J.T. and Moore, C.B., Jr., *J. Chem. Phys.*, 45 (1967) 1066.
[28] Brewer, L., James, C.G., Brewer, R.G., Stafford, F.E., Berg, R.A. and Rosenblatt, G.A., *Rev. Sci. Instr.*, 33 (1962) 1450.
[29] Muller, A., Lumry, R. and Kokubun, H., *Rev. Sci. Instr.* , 36 (1965) 1214.
[30] Hildebrand, F.B., *Advanced Calculus for Applications*, Prentice-Hall, Inc., Englewood Cliffs, (1965).
[31] Wu. C.H., Ph.D. Thesis, 1969, Univ. of Calif., Berkeley.

LEGAL NOTICE

This report was prepared as an account of work sponsored by the United States Government. Neither the United States nor the United States Atomic Energy Commission, nor any of their employees, nor any of their contractors, subcontractors, or their employees, makes any warranty, express or implied, or assumes any legal liability or responsibility for the accuracy, completeness or usefulness of any information, apparatus, product or process disclosed, or represents that its use would not infringe privately owned rights.

TECHNICAL INFORMATION DIVISION
LAWRENCE BERKELEY LABORATORY
UNIVERSITY OF CALIFORNIA
BERKELEY, CALIFORNIA 94720