LBL-15049
Preprint c.2

Lawrence Berkeley Laboratory

UNIVERSITY OF CALIFORNIA

Physics, Computer Science & Mathematics Division

RECEIVED
LAWRENCE
BERKELEY LABORATORY

JAN 14 1983

LIBRARY AND
DOCUMENTS SECTION

Submitted for publication

THE PHYSICS OF DUAL VORTICES AND STATIC BARYONS IN 2 + 1 DIMENSIONS

Neal J. Snyderman

October 1982

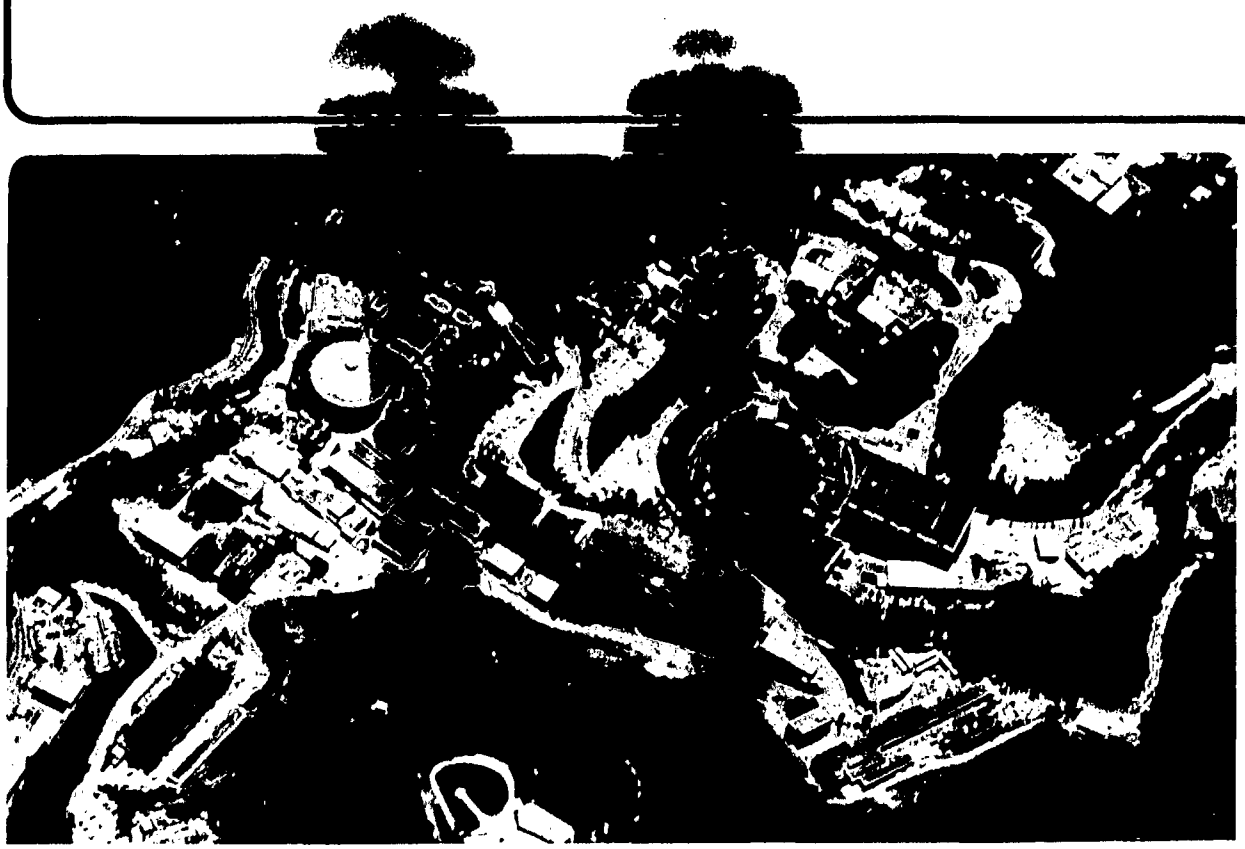

LBL-15049 c.2

Prepared for the U.S. Department of Energy under Contract DE-AC03-76SF00098

DISCLAIMER

This document was prepared as an account of work sponsored by the United States Government. While this document is believed to contain correct information, neither the United States Government nor any agency thereof, nor the Regents of the University of California, nor any of their employees, makes any warranty, express or implied, or assumes any legal responsibility for the accuracy, completeness, or usefulness of any information, apparatus, product, or process disclosed, or represents that its use would not infringe privately owned rights. Reference herein to any specific commercial product, process, or service by its trade name, trademark, manufacturer, or otherwise, does not necessarily constitute or imply its endorsement, recommendation, or favoring by the United States Government or any agency thereof, or the Regents of the University of California. The views and opinions of authors expressed herein do not necessarily state or reflect those of the United States Government or any agency thereof or the Regents of the University of California.

THE PHYSICS OF DUAL VORTICES AND STATIC BARYONS IN 2 + 1 DIMENSIONS*

Neal J. Snyderman

Lawrence Berkeley Laboratory
University of California
Berkeley, California 94720

ABSTRACT

The dual to Mandelstam's SU(N) models of magnetic confinement, which explicitly realize the superconducting phase of the SU(N) gauge theory, are constructed and shown to explicitly realize 't Hooft's physical picture of the confining phase in 2 + 1 dimensions, in which electric vortices are Bloch walls between Z_N^* magnetic domains. These models generalize Polyakov's SU(2) → U(1) compact QED model to SU(N) → $U(1)^{N-1}$. These models have also been considered by Wadia and Das. Static baryons in SU(3) are studied. A Hamiltonian analysis of the physics of confinement in these models is used to ellucidate the beautiful correspondence of Hosatani, that the electric vortex in the Polyakov model is related to the naive dual of a magnetic vortex in the insulating layer of a Josephson junction.

* This work was supported by the Director, Office of Energy Research, Office of High Energy and Nuclear Physics, Division of High Energy Physics of the U.S. Department of Energy under Contract DE-AC03-76SF00098.

I. INTRODUCTION

There exist models of the superconducting phase of SU(N) gauge theories.[1] These models have magnetic vortex excitations that can confine magnetic charge sources in baryon as well as meson like configurations. Ordinary hadrons, however, are confined states of electric charges. It is therefore necessary to develop models of dual vortices. A precise meaning to this duality follows from 't Hooft's[2] commutation relations. These commutation relations follow from the global topology of the gauge group. As Ward identities, which are relations between Green's functions following from the infinitesimal local gauge invariance, play an important role in analyzing the short distance behavior of the gauge theory, the expectation values of the 't Hooft commutation relations play an important role in analyzing the long distance behavior of the gauge theory. In 2 + 1 dimensions, these relations will directly imply how to go from models of magnetic vortices to models of electric vortices.

Polyakov[3,28] had considered an SU(2) → U(1) gauge model in 2 + 1 dimensions to study the effects of instantons; he found that instantons could give confinement in this model! We will argue that the 't Hooft commutation relations imply Polyakov's model is the dual of the SU(2) Neilsen-Olesen[4] model of magnetic vortices. Previously, Hosotani[5] had made the beautiful observation that the equations of the Polyakov model are naively dual (E → B, B → − E) to the equations of the Josephson junction.[6] The 't Hooft duality in 2 + 1 dimensions is therefore nontrivial; the electric vortex in the confining phase is not the naive dual of a magentic

vortex in a superconductor, but is closer to the naive dual of a magnetic vortex in the insulating layer of a Josephson junction.

Applying the 't Hooft commutation relations to Mandelstam's[1] SU(N) generalization of the Nielsen-Olesen magnetic vortex models, we have determined the dual of these models in 2 + 1 dimensions. These models have SU(N) electric vortices that can confine N quarks as well as a quark and antiquark. These models are simple generalizations of Polyakov's SU(2) → U(1) model in which SU(N) is spontaneously broken with adjoint representation scalar fields, to its maximal abelian subgroup, $U(1)^{N-1}$. These models have been independently considered by Wadia and Das.[7] These models may contain the essential confinement physics of the pure SU(N) gauge theories; the relevant dynamical degrees of freedom of these models, monopoles and abelian gauge fields, are the same as those picked out by the generalized unitary gauges 't Hooft[8] has considered to describe the long distance behavior of the pure SU(N) gauge theory.

In Section 2 we review the content of the 't Hooft commutation relations in 2 + 1 dimensions, the different physical interpretations of the order and disorder operators in the different phases, and 't Hooft's Z_N^* (dual Z_N) magnetic domain picture of confinement in 2 + 1 dimensions.[2] In Section 3 we review some of the features of magnetic vortices in SU(N) gauge models, and how these models explicitly realize the 't Hooft commutation relations for the superconducting phase.

In Section 4 we argue that in the transition from the superconducting phase to the confining phase, the dual realization of the 't Hooft commutation relations, the explicit SU(N) models of the superconducting

phase go over to an SU(N) generalization of Polyakov's confinement model.

Section 5 reviews the 't Hooft-Polyokov monopole and its embedding in SU(N) gauge theories. For our later analysis we need the masses of the monopoles for all embeddings of SU(2) in SU(N) to be equal; we briefly discuss how the scalar fields can be chosen to realize this. In Section 6 the SU(N) Polyakov models are discussed, and in Section 7 it is shown how these models explicitly realize 't Hooft's Z_N^* magnetic domain picture of confinement.

Static baryons in the SU(3) model are discussed in Section 8. We show how the SU(3) baryon loop decomposes in this model into a product of abelian Wilson loops. This analysis of baryons suggests the SU(3) meson Wilson loop can also be decomposed into a product of abelian loops. An additional harmonic excitation of the strings, associated with "delaminating" sheets is suggested.

The Minkowski space-time physics of confinement in these models is discussed in Section 9. For the SU(2) case, the Euclidean space-time physics of the Polyakov model is well known to have a correspondence with that of the abelian lattice gauge theory.[28,29,30] We develop the close relationship between the Hamiltonian physics of the Polyakov model and that of the Drell, Quinn, Svetitsky and Weinstein[27] Hamiltonian analysis of the abelian lattice gauge theory. Our emphasis in this Hamiltonian analysis, through, is to clarify the physics of the Hosotiani[5] duality between the Polyakov model and the Josephson junction.

Finally, in Section 10 we add some concluding remarks on the relation of our analysis to the Z_N^* fluxon spagetti vacuum, and on

the possible relavance of these models to the pure gauge theory without the additional scalar fields.

II. 't HOOFT COMMUTATION RELATIONS: PHASES IN 2 + 1 DIMENSIONS

A summary of the content of the 't Hooft commutation relations[2] follows. These abstract notions will later be explicitly realized in the models of both the superconducting and confining phases. In 2 + 1 dimensions, the 't Hooft commutation relations for a pure SU(N) gauge theory are[9]

$$M_{n^*}(\vec{x}^*, t)\, W_\Lambda(C, t) = W_\Lambda(C, t) M_{n^*}(\vec{x}^*, t) \exp\{i \frac{2\pi}{N} n^* n(\Lambda) n(\vec{x}, C)\}, \tag{2.1}$$

where $W_\Lambda(C, t)$ is a spatial Wilson loop operator, on a fixed time slice, in the representation Λ of SU(N), and $M_{n^*}(\vec{x}^*, t)$ is an operator that acts on fields by gauge transforming them by $\Omega^{[x^*]}(\vec{x}, t)$; this gauge transformation is singular at $(\vec{x}^*, t)$ and has the property that as $\vec{x}$ encircles $\vec{x}^*$, Ω does not return to its original value, but acquires a Z_N phase,

$$\Omega^{[\vec{x}^*]}(\theta = 2\pi) = e^{i \frac{2\pi}{N} n^*} \Omega(\theta = 0). \tag{2.2}$$

A gauge transformation associates with each point in space-time a point in the group; this gauge transformation associates with a closed path in space an open path in on the SU(N) group manifold, going, for example, from the identity to an elementof the Z_N center. This open path in SU(N) corresponds to a closed path in $SU(N)/Z_N$. $n(\Lambda)$ is the N-ality of the representation Λ, the number of fundamental minus the number of anti fundamental representations from which the representation Λ is built by tensor products. Finally, $n(\vec{x}^*, C)$ is the number of times the curve C loops around the point $\vec{x}^*$.

In the (in principle possible) superconducting phase of the SU(N) gauge theory, $M(\vec{x}^*, t)$ creates a magnetic vortex at $(\vec{x}^*, t)$, and $W(C, t) = \frac{tr}{N} P \exp(ie \oint_C A_k(\vec{x}, t) dx_k) = \exp(ie\Phi)$ is a gauge invariant measure of the magnetic flux through C. The commutation relations imply the magnetic flux Φ is $\frac{2\pi}{Ne}$ times an integer mod N. Because of the mod N conservation of flux, a flux of $\frac{2\pi}{e}$ times an integer is equivalent to the vacuum. N fundamental vortices of flux

$\frac{2\pi}{Ne}$ can therefore combine to have no flux. An effective field theory describing the interaction of magnetic vortices in the superconducting phase therefore has an interaction term proportional to powers of $M^N + M^{\dagger N}$ (as well as $MM^\dagger$ terms), and consequently is invariant under a global Z_N^* symmetry, $M \to \exp(i \frac{2\pi}{N} n^*)M$. Such a symmetry implies $\langle M \rangle = 0$.

The phase dual to the superconducting phase is characterized by a magnetization, $\langle M \rangle \neq 0$, spontaneously breaking this global Z_N^* symmetry. There are N degenerate vacuua associated with the N orientations of $\langle M \rangle$, $\langle M \rangle_n = e^{i \frac{2\pi}{N}} \langle M \rangle_{n-1}$, n = 1, ... , N. In this phase the commutation relations imply that W(C) creates a domain; the Bloch wall along C seperates two different domains, say, $\langle M \rangle$ and $e^{i\frac{2\pi}{N}} \langle M \rangle$. (See Fig. 1) This Bloch wall is an electric vortex that can confine quarks. Because N Bloch walls can meet at a point (see Fig. 2), these electric vortices can confine N quarks (baryon) as well as a quark and antiquark (meson).

III. MODELS OF THE SUPERCONDUCTING PHASE

MAGNETIC VORTICES

The superconducting phase of an SU(N) gauge theory can be explicitly modeled by introducing additional adjoint representation scalar fields. The 't Hooft commutation relations also apply to an SU(N) gauge theory with additional fields in representations with zero N-ality, only now M acts by gauge transforming these fields as well as the vertor potential. We first discuss these superconductor models in 3 + 1 dimensions, and then show how, in 2 + 1 dimensions, the 't Hooft commutation relations imply from them models of the confining phase.

The physical motivation for models of the superconducting phase is as follows. If electrodynamics in ordinary superconductors is considered to be part of a unified theory of electroweak interactions, then the superconducting order parameter field is a representation of the non-abelian group. Electrodynamics in the Georgi-Glashow[10] SO(3) electroweak gauge model is then made superconducting by breaking the U(1) symmetry with an additional isovector scalar field order parameter. The SU(N) superconductor models generalize from this physics in the following way.

Consider an SU(N) gauge theory with a set of adjoint representation scalar fields, Θ_i and Φ_α, where i and α label which adjoint representation field. The Hamiltonian is of the form[11],

$$H = \mathrm{tr}(E_k^2 + B_k^2) + \prod_i \mathrm{tr}|D_\mu \Theta_i|^2 + \prod_\alpha \mathrm{tr}|D_\mu \Phi_\alpha|^2 + V(\Theta, \Phi), \tag{2.1}$$

where the adjoint representation fields are chosen to be fundamental representation elements of the SU(N) Lie algebra (for example, $E_k = E_k^a \frac{\lambda^a}{2}$). The generators, $\lambda^a/2$, are chosen so that there are N - 1 mutuality commuting (neutral) generators, H_i, and N(N - 1) (charged) generators $E_{\pm\vec{\alpha}}$, where the $N(N-1)/2$ $\vec{\alpha}$'s are N - 1 component root vectors, (vector of charges, eigenvalues of $\vec{H}$), obeying

$$[\vec{H}, E_{\pm\vec{\alpha}}] = \pm \vec{\alpha} E_{\pm\vec{\alpha}}$$

$$[E_{+\vec{\alpha}}, E_{-\vec{\alpha}}] = \vec{\alpha} \cdot \vec{H}. \tag{3.2}$$

The electric and magnetic fields E_k and B_k are the space-time, and space-space components of the field tensor,

$$G_{\mu\nu} = \partial_\mu A_\nu - \partial_\nu A_\mu + ie\,[A_\mu, A_\nu], \tag{3.3}$$

and the covariant derivatives of the adjoint representation fields are, for example,

$$D_\mu \Theta = \partial_\mu \Theta + ie\,[A_\mu, \Theta]. \tag{3.4}$$

The components of A_μ in the basis (3.2) are

$$A_\mu = \sum_{|\vec{\alpha}|} (W_\mu^{+\vec{\alpha}} E_{-\vec{\alpha}} + W_\mu^{-\vec{\alpha}} E_{+\vec{\alpha}}) + \vec{A}_\mu \cdot \vec{H}\,. \tag{3.5}$$

The scalar potential is chosen to break the symmetry in two stages. First, with the Θ_i's, SU(N) is spontaneously broken to its maximal

abelian subgroup,

$$SU(N) \to \underbrace{U(1) \times U(1) \times \ldots \times U(1)}_{N-1}. \tag{3.6}$$

This is a generalization of compact QED where SU(2) → U(1); there are N - 1 "photons", and the N(N - 1) massive gauge fields, $W^{(q_1, q_2, \ldots q_{N-1})}$, carry N - 1 abelian electric charges, $\vec{q} = \pm e\vec{\alpha}$. In the next stage of spontaneous symmetry breaking, these N - 1 "electromagnetic" directions are made superconducting; that is, $U(1)^{N-1}$ is totally broken by the Φ_α's, the superconducting order parameter fields, so that the photons acquire mass.

There are then magnetic vortex excitations in which the $U(1)^{N-1}$ symmetry is restored inside the vortex core. In 3 + 1 dimensions these excitations are time independent field configurations with finite energy per unit length. The vortex is characterized by being a vacuum configuration almost everywhere, but with a line, C^*, along which $\Phi_\alpha = 0$. Since this is not a global minimum of the potential, this increases the energy per unit length of the line. The curve C^* can be an infinite line or a closed loop. We will consider the fields on a 2-dimensional x - y plane perpendicular to the curve C^*.

Far from the vortex core the scalar fields take an vacuum values; from H, Eq. (3.1), this implies,

$$\begin{aligned} D_\mu \Theta_i &= 0 \\ D_\mu \Phi_\alpha &= 0 \\ V(\Theta_1, \Theta_2, \ldots, \Phi_1, \Phi_2, \ldots) &= 0 \end{aligned} \tag{3.7}$$

From $D_\mu \Theta_i = 0$,

$$[D_\mu, D_\nu]\ \Theta_i = ie[G_{\mu\nu}, \Theta_i] = 0, \tag{3.8}$$

so either $G_{\mu\nu} = 0$, or it commutes with Θ_i. A gauge can be chosen for which $V' = 0$ when $\Theta_i = \vec{f}_i \cdot \vec{H}$; then $G_{\mu\nu}$ can be non zero only in the abelian directions. Not only is $G_{\mu\nu} = 0$ in the $E_{\vec{\alpha}}$ directions, but $W_\mu = 0$ as well (since Θ_i is constant and so $D_\mu \Theta_i = 0$ implies $[A_\mu, \Theta_i] = 0$). Along the x axis, the Φ_α for which $V' = 0$ will be chosen in the directions of the charged generators, $E_{\vec{\alpha}}$, (the Φ_α are charged relative to the U(1)'s). In directions in space other than along the x axis the Φ_α are gauge transformed vacuum fields,

$$\Phi(\theta) = \Omega(\theta)\ \ \Phi(0)\Omega^{-1}(\theta). \tag{3.9}$$

From $D_\mu \Phi_\alpha = 0$, $[G_{\mu\nu}, \Phi_\alpha] = 0$; since from the Θ_i's, $G_{\mu\nu} = \vec{G}_{\mu\nu} \cdot \vec{H}$, and since $[\vec{H}, \Phi_\alpha] \neq 0$, we conclude $\vec{G}_{\mu\nu} = 0$ everywhere in the vacuum far from the vortex core, although now

$$A_\mu = \vec{A}_\mu \cdot \vec{H} = \frac{i}{e}\, \Omega^{-1} \partial_\mu \Omega. \tag{3.10}$$

However, the vortex excitation is characterized by $\Phi_\alpha = 0$ in the vorex core. Therefore, $\vec{G}_{\mu\nu} \neq 0$ and the abelian $U(1)^{N-1}$ gauge symmetry will be restored in the vortex core.

The vanshing of Φ_α inside some curve C in the vacuum is implied by continuitity of the fields if the Φ_α take an different vacuum values along closed paths C, Eq. (3.9), with Ω having the property $\Omega\ (2\pi) = e^{i\frac{2\pi}{N} n^*} \Omega(0)$. As C is shrunk to a point, Ω becomes discontinuous, and the only way the Φ's can remain continuous is if they vanish at a point. The adjoint representation of SU(N) fields are also

representations of $SU(N)/Z_N$, and far from the vortex core define mappings from circles in space onto closed paths in the group $SU(N)/Z_N$. These mappings fall into homotopy classes,[12] $\Pi_1(SU(N)/Z_N) \approx Z_N$; there are N homotopically inequivalent classes of paths associated with the mappings of a closed path in space (circle, S^1) onto closed paths on the group manifold of $SU(N)/Z_N$. This is an N-fold connected manifold which identifies all points of the SU(N) manifold that differ by an element of Z_N. Different values of n^* (mod N) correspond to paths in the different connected regions of the $SU(N)/Z_N$ manifold. The gauge transformations, $\Omega(2\pi) = e^{i\frac{2\pi}{N} n^*} \Omega(0)$, topologically characterize the magnetic vortex. Therefore, in this superconducting phase, for the models in 2 + 1 dimensions, $M_{n^*}(\vec{x}^*, t)$, which creates a gauge transformation with such a Z_N discontinuity, creates a magnetic vortex soliton.[13]

A Wilson loop surrounding such a configuration will measure its magnetic flux. Far from the vortex core the vector potential from the N - 1 abelian vortices is a pure gauge; from Eq. (3.10), this gauge transformation is in the abelian directions of the group

$$\Omega(\theta) = \exp(i\vec{g} \cdot \vec{H}\theta). \tag{3.11}$$

This implies

$$A_\theta = \frac{i}{e}\, \Omega^{-1}(\theta)\ \ \frac{1}{r} \frac{\partial}{\partial\theta}\, \Omega(\theta) = \frac{1}{e} \frac{\vec{g} \cdot \vec{H}}{r} \tag{3.12}$$

Substituting this vector potential into the Wilson loop gives

$$W(C) = \frac{\mathrm{tr}}{N} P \exp(ie \int_0^{2\pi} A_\theta r d\theta)$$

$$= \frac{\mathrm{tr}}{N} \exp \int_0^{2\pi} (\frac{1}{r} \frac{\partial}{\partial\theta} \ln \Omega)\, r d\theta$$

$$= \frac{\mathrm{tr}}{N} \Omega(2\pi)\Omega^{-1}(0) = e^{i\frac{2\pi}{N} n^*} . \qquad (3.13)$$

This implies

$$e^{i2\pi\vec{g}\cdot\vec{H}} = e^{i\frac{2\pi}{N} n^*} 1. \qquad (3.14)$$

The different solutions of these equations[14] for $\vec{g}$ will give the flux in each of the N - 1 abelian directions in order that the total flux is $\frac{2\pi}{Ne} n^*$, (n^* is an integer mod N).

For SU(3), this condition, Eq. (3.14), is explicitly, since $\vec{H} = (\frac{\lambda^3}{2}, \frac{\lambda^8}{2})$,

$$e^{i2\pi\vec{g}\cdot\vec{H}} = \exp\left[i\, 2\pi\vec{g}\cdot\begin{pmatrix} (\frac{1}{2}, \frac{1}{2\sqrt{3}}) & & \\ & (-\frac{1}{2}, \frac{1}{2\sqrt{3}}) & \\ & & (0, -\frac{1}{\sqrt{3}}) \end{pmatrix}\right]$$

$$= e^{i\frac{2\pi}{3} n^*} 1. \qquad (3.15)$$

Depending on n^*, there is a different set of solutions for $\vec{g}$, shown in Fig. (3). If $n^* = 0$ (mod 3), $\vec{g} = 2 \times$(adjoint represention roots); $n^* = 1$ (mod 3), $\vec{g} = 2 \times$(antifundamental representation weights); $n^* = 2$ (mod 3), $\vec{g} = 2 \times$(fundamental representation weights). The nontrivial vortices therefore carry (anti) fundamental representation flux, $\frac{4\pi}{e}\vec{\mu}$, where $\vec{\mu}$ is a (anti) fundamental weight. Because three

fundamental representation charges can combine into a singlet, it is already clear that these magnetic vortices in 3 + 1 dimensions will be able to confine fundamental representation magnetic monopole sources into baryon as well as meson configurations.[1]

It will be useful for our later analysis of the dual phase to discuss some further formal implications of this confinement of monopoles. We first must consider the natural generalization of the operator $M(\vec{x}^*, t)$ to Minkowsik 3 + 1 dimensions. $M(\vec{x}^*, t)$ is generalized to the 't Hooft loop,[2] $t(C^*, t)$, where C^* is a closed curve in space. At fixed time we can then consider $t(C^*)$ appropriate for Euclidean 2 + 1 dimensions.[15] $t(C^*)$ creates a gauge transformation such that on any closed path C that pierces the surface S^* with boundary C^*, there is a Z_N^* phase shift,

$$\Omega^{[C^*]}(\theta = 2\pi) = e^{i\frac{2\pi}{N} n^*} \Omega^{[C^*]}(\theta = 0), \qquad (3.16)$$

where θ parametrizes the closed curve C that encircles C^*. A gauge can be chosen so that the change by a Z_N factor occurs discontinuously.[2,15,16] Then S^* can be chosen to contain this sheet of discontinuities. In the superconducting phase, C^* is the world line of a magnetic vortex soliton; on a Euclidean time slice through C^*, the state created by $t(C^*)$ corresponds to a magnetic vortex-anti-vortex soliton pair. Therefore, along the curve C^*, $t(C^*)$ creates a magnetic vortex loop. The Wilson loop picks up a Z_N factor every time it pierces the sheet of discontinuities bounded by the curve C^*, as it measures the magnetic flux through C. (See Fig. 4.)

In Euclidean 3 + 1 dimensions, the 't Hooft loop can be oriented in the space-time plane. It can then be interpreted as the current loop of a fundamental representation magnetic monopole (recall the Z_N discontinuity of the gauge transformation implied fundamental representation magnetic charge) propagating on the world line C^*, or in other words, the event of the creation and subsequent annihilation of a monopole-antimonopole pair. For a large loop in the time direction,

$$< t(C^*) > \propto \exp[-\binom{\text{interaction energy of}}{\text{seperate monopole pair}} \times \text{time}] \qquad (3.17)$$

Due to the magnetic vortex excitation with fundamental representation magnetic flux,

$$< t(C^*) > \propto \exp[-\text{ const.} \times A(S^*)], \qquad (3.18)$$

where $A(S^*)$ is the area of the sheet S^* swept out in time by the magnetic vortex string of finite energy per unit length. Because of Euclidean invariance, a spacial 't Hooft loop will also have an area law in the superconducting phase. This implies that both a spacial 't Hooft loop in Milkowski 3 + 1 dimensions, and the Euclidean loop in 2 + 1 dimensions, will have area laws. The area law can therefore be associated with the sheet S^* of Z_N discontinuities.[2,15]

IV. DUAL OF SUPERCONDUCTING MODELS

Consider these superconductor models in 2 + 1 dimensions. As we have seen, $M(x^*, t)$ creates a magnetic vortex soliton. Inside the vortex core, the $U(1)^{N-1}$ abelian gauge symmetry is restored. Now if $<M> \neq 0$, the state created from the vacuum by acting on it with M is not orthogonal to the vacuum. One can think of the vacuum as filled with an infinite number of vortices, so the creation or annihilation of one more makes no difference. The fundamental consequence of this vortex condensate is that the $U(1)^{N-1}$ symmetry is restored over all space. Thus the models with $SU(N) \to U(1)^{N-1}$ are dual to the SU(N) superconductor models, and therefore should describe the confining phase. For SU(2) in 2 + 1 dimensions the 't Hooft commutation relations have therefore implied that the SU(2) → U(1) gauge model, which Polyakov had considered in order to analyze the effects of instantons, is dual to the SU(2) Nielsen-Olesen superconductor model. Consequently the electric vortex in the Polyakov model is dual to the magnetic vortex in the SU(2) superconductor. We will later consider the SU(N) generalization of Polyakov's model.

V. MONOPOLES IN $SU(N) \to U(1)^{N-1}$

In 3 + 1 dimensions the $SU(N) \to U(1)^{N-1}$ models have magnetic monopole solitons. We digress to briefly discuss these monopoles.[36] The Hamiltonian is the same as Eq. (3.1), but without the scalar fields Φ_α,

$$H = \mathrm{tr}(E_k^2 + B_k^2) + \prod_i \mathrm{tr}|D_\mu \Theta_i|^2 + V(\Theta_i). \tag{5.1}$$

Our discussion of the monopoles is similar to our discussion of vortices; we now consider the fields in 3-dimensional space, though. From our discussion of vortices, we concluded from Eq. (3.8) that for the scalar fields taking on vacuum values, there could still be non zero gauge fields in the N-1 commuting directions. Now, instead of the vacuum Θ_i being constant in space, by a local gauge transformation the Θ_i can be chosen to point in different directions at different points in space. Monopoles are associated with topologically nontrivial vacuum configurations for the Θ_i, just as the magnetic vortices are associated with topologically nontrivial vacuum configurations for the Φ_α. Since monopoles in $SU(N) \to U(1)^{N-1}$ are embeddings of the 't Hooft[17]-Polyakov[18] monopole in $SU(2) \to U(1)$, we consider this case first.

Now there is just one isovector scalar field $\Theta = \vec{T}\cdot\vec{\Theta}$, where $\vec{T} = \vec{\tau}/2$, and outside a finite spherical region of space S, Θ takes an vacuum values

$$V(\Theta) = \frac{\lambda}{4}\left(\vec{\Theta}^2 - f^2\right)^2 = 0, \tag{5.2a}$$

$$D_\mu \Theta = 0. \tag{5.2b}$$

The minima of V, $\vec{\Theta}^2 = f^2$, correspond to the points of a 2-dimensional sphere. Along the Z axis, for r outside S, we choose

$$\Theta(0,0,Z) = fT^3, \tag{5.3}$$

and in other directions of space,

$$\Theta(r,\theta,\phi) = \Omega(\theta,\phi)\,\Theta(0,0,Z)\,\Omega^{-1}(\theta,\phi) = f\hat{r}\cdot\vec{T}; \tag{5.4}$$

that is, the isovector $\vec{\Theta}$ can be chosen to point radially outward, so the direction in the Lie algebra is correlated with the direction in space. However, the gauge transformation $\Omega(\theta,\phi)$ must be singular inside the region S. The only way a singularity in $\Theta(r,\theta,\phi)$ can be avoided is if $|\vec{\Theta}|$ depends on r and vanishes at some point inside S. Inside S where $|\vec{\Theta}| \to 0$, the potential V is no larger at its global minimum, so this configuration has finite energy.

From the asymptotic condition that Θ is covariantly constant, a non zero vector potential is necessary to compensate Θ changing in space. From Eq. (5.2b) and (5.4), and for time independent fields in $A_0 = 0$ gauge,

$$A_k \xrightarrow[r\to\infty]{} \frac{1}{e}\frac{(\vec{T}\times\hat{r})_k}{r}, \tag{5.5}$$

from which

$$G_{ij} = \frac{1}{e}\,\epsilon_{ijk}\,\frac{\hat{r}_k(\hat{r}\cdot\vec{T})}{r^2}. \tag{5.6}$$

The projection of this non-abelian field into the electromagnetic direction (picked out by $\hat{\Theta}$, the generator of the unbroken U(1)) gives

$$B_k = \frac{1}{2}\,\varepsilon_{igk}\,\hat{\Theta}\cdot\vec{G}_{ij} = \frac{4\pi}{e}\,\frac{\hat{r}_k}{4\pi r^2}\,. \tag{5.7}$$

Therefore, this configuration has the asymptotic field of a magnetic monopole.

A more general expression for the gauge invariant electromagnetic field, valid also in the non asymptotic region, is the 't Hooft tensor,[17]

$$F_{\mu\nu} = \hat{\Theta}\cdot\vec{G}_{\mu\nu} - \frac{1}{e}\hat{\Theta}\cdot(D_\mu\hat{\Theta}\times D_\nu\hat{\Theta}), \tag{5.8a}$$

which can be rewritten in the form[19]

$$F_{\mu\nu} = \partial_\mu A_\nu - \partial_\nu A_\mu - \frac{1}{e}\hat{\Theta}\cdot(\partial_\mu\hat{\Theta}\times\partial_\nu\hat{\Theta}), \tag{5.8b}$$

where $A_\mu = \hat{\Theta}\cdot\vec{A}_\mu$. The magnetic flux is then

$$\oint B_k dS_k = \frac{4\pi n}{e} = \int d^3x\,\partial_i\left(\frac{1}{2}\varepsilon_{ijk}[(\partial_j A_k - \partial_k A_j) - \frac{1}{e}\hat{\Theta}\cdot(\partial_j\hat{\Theta}\times\partial_k\hat{\Theta})]\right) \tag{5.9}$$

The first term on the right hand side is obviously zero. However in the second term, $\hat{\Theta}(\vec{x})$ maps a point in space onto a point on the unit sphere,[19] and $\frac{1}{4\pi}\oint\frac{1}{2}\varepsilon_{ijk}\hat{\Theta}\cdot(\partial_i\hat{\Theta}\times\partial_i\hat{\Theta})dS_k$ counts the number of times, n, the sphere $\hat{\Theta}^2 = 1$ is covered as $\vec{x}$ covers the sphere of space as $r\to\infty$.

While we have considered the asymptotic fields, for non asymptotic r the fields have additional radial dependence. The 't Hooft-

Polyakov ansatze for the fields which minimize the energy is,

$$A_k = \frac{1}{e}\,\varepsilon_{kaj}\,\frac{x_j}{r^2}\,T^a\,(1 - K(r)), \tag{5.10a}$$

$$\Theta = H(r)\,\hat{r}\cdot\vec{T}\,. \tag{5.10b}$$

However the asymptotic values, Eq. (5.4) and (5.5), are reached exponentially, the corrections to A_k for large r being of order $e^{-M_W r}$, and for Θ of order $e^{-M_\Theta r}$, where $M_W = ef$, and $M_\Theta = \sqrt{\frac{2\lambda}{e^2}}\,M_W$. Within the core region S, the fields deviate from their vacuum values; the charged gauge fields are non zero (since $D_k\Theta \neq 0$), though as $r\to 0$ all fields vanish. For $\Theta = 0$, $V(\Theta) \neq 0$. The explicit forms for the fields are determined by minimizing the field energy subject to the boundary conditions. Physically, though, the core size is determined by balancing the Coulomb field energy in the region outside S, where the other fields take on essentially vacuum values, and the core energy associated with all fields deviating from their vacuum valves. If the Coulomb energy is cut off at a radius $\sim 1/M_W$, then

$$\int \frac{1}{2}B_k^2\,d^3x \simeq \frac{1}{2}\left(\frac{4\pi}{e}\right)^2\int_{\sim 1/M_W}^{\infty}\left(\frac{x_k}{4\pi r^3}\right)^2 4\pi r^2 dr = \frac{1}{2}\frac{4\pi}{e^2}M_W. \tag{5.11}$$

The core energy should be comparable in magnitude, so we expect $M_{mon} \simeq \frac{4\pi}{e^2}M_W$. This estimate is in fact a lower bound to the mass.

This bound is simply obtained from[20]

$$M = \int d^3H = \int d^3x\{\tfrac{1}{2}\vec{B}_k^2 + \tfrac{1}{2}(D_k\vec{\Theta})^2 + V(|\vec{\Theta}|)\}$$

$$= \int d^3x\{[\tfrac{1}{2}(\vec{B}_k \mp D_k\vec{\Theta})^2 \pm \vec{B}_k\cdot D_k\vec{\Theta}] + V(|\vec{\Theta}|)\}$$

$$\geqslant \pm \int d^3x\, \vec{B}_k\cdot D_k\vec{\Theta} + \int d^3x\, V(|\vec{\Theta}|)$$

$$\geqslant f\left|\int dS_k\, \hat{\Theta}\cdot\vec{B}_k\right| = \frac{4\pi}{e}\frac{M_W}{e}. \tag{5.12}$$

The lower bound is proportional to the topological charge. Corrections to this bound are of order λ/e^2; in the limit $\lambda/e^2 \to 0$ but with $|\vec{\Theta}| = M_W/e$ fixed, this bound is saturated (Prasad-Sommerfield-Bogomolnyi[20]). In general, $M = \frac{4\pi}{e^2} M_W \varepsilon(\lambda/e^2)$, where ε is a slowly varying function of order 1.[21]

While the topological stability of the monopole and the consequent magnetic charge has been associated with the scalarfields, which define a mapping from the S^2 of space (surrounding the center of the monopole) onto the S^2 of the minima of V, a gauge can be chosen so that these properties are transferred to the gauge fields. This gauge, singular gauge,[31,32] is very useful for superposing monopole configurations, which is necessary for our later analysis. Consider the gauge transformation

$$\Omega(\theta) = \exp\,(i\psi(\theta)\hat{\phi}\cdot\vec{\tau}/2) \tag{5.13}$$

where

$$\psi(\theta) = \begin{cases} \theta, & 0 \leqslant \theta \leqslant \pi-\varepsilon \\ \to 0, & \pi-\varepsilon \leqslant \theta \leqslant \pi \end{cases} \tag{5.14}$$

Apart from a core of angle ε surrounding the -Z axis, the scalar field can be smoothly gauge transformed, so that over the rest of space it points in the same direction in isospin space,

$$\Theta = f\hat{x}\cdot\frac{\vec{\tau}}{2} \to \Omega\,\Theta\,\Omega^{-1} = f\,\frac{\tau^3}{2}. \tag{5.15}$$

In the limit $\varepsilon \to 0$, the cone is shrunk to zero, so this gauge transformation becomes singular, and consequently the fields can become singular. While the scalar field is non singular, the vector potential $A_k = \vec{\Theta}\cdot\vec{A}_k$ acquires a Dirac string; this leads to a singular contribution to $\partial_i A_k - \partial_k A_i$. Here, however, the electromagnetic field is defined by the 't Hooft tensor, Eq. (5.8), and in gauge transforming to singular gauge becomes

$$F_{\mu\nu} = \partial_\mu(\hat{A}_\nu\cdot\hat{\Theta}) - \partial_\nu(\vec{A}_\mu\cdot\hat{\Theta}) - \frac{1}{e}\hat{\Theta}\cdot(\partial_\mu\hat{\Theta}\times\partial_\nu\hat{\Theta})$$

$$\to \hat{\Theta}\cdot(\partial_\mu\vec{A}_\mu - \partial_\nu\vec{A}_\mu + e\vec{A}_\mu\times\vec{A}_\nu) = G^3_{\mu\nu} \tag{5.16}$$

In this expression the singularity of the $\nabla\times A$ term is cancelled by the singularity in the limit $\varepsilon \to 0$ of the $\hat{\Theta}\cdot(\vec{A}_\mu\times\vec{A}_\nu)$ term.[31,32]

The embeddings of the SU(2) monopole into $SU(N) \to U(1)^{N-1}$[22,23] follow from the spatial variation of the Θ_i. Outside S the Θ_i can be chosen so that along the Z axis

$$\Theta_i(0,0,Z) \xrightarrow[r\to\infty]{} \vec{f}_i\cdot\vec{H}, \tag{5.17}$$

but in a general direction in space

$$\Theta_i(r,\theta,\phi) = \Omega(\theta,\phi)\ \Theta_i(0,0,Z)\ \Omega^{-1}(\theta,\phi). \tag{5.18}$$

This gauge transformation can be chosen so that

$$\Theta_i(r,\theta,\phi) = Y_i^\alpha + H_i^\alpha(r)\vec{T}^\alpha \cdot \hat{r}, \tag{5.19}$$

where

$$\vec{T}^\alpha = \left(\frac{E_\alpha + E_{-\alpha}}{\sqrt{2}}, \frac{E_\alpha - E_{-\alpha}}{\sqrt{2}\, i}, \vec{\alpha}\cdot\vec{H} \right) \tag{5.20}$$

is an embedding of the SU(2) Lie algebra into the root space of SU(N) associated with the root α; there are N(N-1)/2 embeddings, corresponding to N(N-1)/2 monopoles. Also, the constant

$$Y_i^\alpha = (\vec{f}_i - (\vec{f}_i\cdot\vec{\alpha})\vec{\alpha})\cdot\vec{H} \tag{5.21}$$

is the "hypercharge" relative to the SU(2) embedding; it is a vector in the root space perpendicular to $\vec{\alpha}$ in the plane containing $\vec{\alpha}$ and $\vec{f}_i$. Since

$$[Y_i^\alpha, \vec{H}] = 0$$

$$[Y_i^\alpha, E_\alpha] = 0, \tag{5.22}$$

Y_i^α breakes $SU(N) \to SU(2) \times U(1)^{N-2}$, and the second term in Eq. (5.19) breaks this $SU(2) \to U(1)$. Asymptotically,

$$H_i^\alpha(r) \xrightarrow[r\to\infty]{} \hat{f}_i\cdot\vec{\alpha}, \tag{5.23}$$

which is the projection of $\vec{f}_i$ into the direction of the SU(2) subspace. Along the Z axis, this part of Θ_i, $(\vec{f}\cdot\vec{\alpha})T_3^\alpha$, corresponds to the vacuum expectation value that determines the mass of the SU(2) monopole, $\frac{4\pi}{e}\,|\vec{f}\cdot\vec{\alpha}|\varepsilon$.

The asymptotic condition that Θ_i is covariantly constant implies the vector potential is non zero to compensate for the Θ_i changing in space. From Eqs. (5.19) and (5.23), $D_k\Theta_i = 0$ implies asymptotically

$$A_k = \frac{1}{e}\frac{(\vec{T}^\alpha \times r)_k}{r}, \tag{5.25}$$

from which

$$B_k = \left(\frac{4\pi}{e}\vec{\sigma}\right)\frac{x_k}{4\pi r^3}\cdot\Omega(\theta,\phi)\ \vec{H}\Omega^{-1}(\theta,\phi). \tag{5.26}$$

This is the field of a monopole with its magnetic flux partitioned into each of the N-1 (conjugated) abelian directions given by $\frac{4\pi}{e}\vec{\alpha}$. That is, the monopole has adjoint representation charge.

The complete Hamiltonian for time independent fields in $A_0 = 0$ gauge is

$$\int d^3x\, \mathcal{H} = \int d^3x \{ \mathrm{tr}B_k^2 + \sum_{i=1}^{N(N-1)/2} \mathrm{tr}(D_k\Theta_i)^2 + V(\Theta_1, \Theta_2, \ldots, \Theta_{N(N-1)/2}) \}. \tag{5.27}$$

Although only one adjoint representation scalar field is necessary to spontaneously break SU(N) to $U(1)^{N-1}$, (although not with a quartic potential), we choose N(N-1)/2 adjoint representation scalar fields

so that all the N(N-1)/2 monopoles (and N(N-1)/2 antimonopoles with $\vec{\alpha} \to -\vec{\alpha}$) have the same mass. Each of the N(N-1)/2 Θ fields asymptotically takes on non trivial vacuum values, with the same A_k, Eq. (5.25), contributing to $D_k \Theta_i = 0$ for each i. V is chosen so that along the z axis all Θ_i take an asymptotic values, Eq. (5.17), with $|\vec{f}_i| = f$ for all i, but with the directions of the $\vec{f}_i$ determined from a term in V of the form

$$h \sum_{i \neq j} (\mathrm{tr}\, \Theta_i \Theta_j)^2 \xrightarrow[r \to \infty]{} \frac{h}{2} f^2 \sum_{i \neq j} \hat{f}_i \cdot \hat{f}_j . \tag{5.28}$$

The Θ_i repel; the minimum energy occurs when the $\hat{f}_i$ point as far away from one another as possible in the N-1 dimensional space. This occurs for $\hat{f}_i = \vec{\alpha}_i$, the $\vec{\alpha}_i$ being roots of the weight diagram. For each i there is an embedding of the SU(2) monopole in the SU(2) determined by the root $\vec{\alpha}$. The total contribution to the monopole mass squared from all the Θ_i's, from Eq. (5.23) and below, is proportional to

$$\sum_{i=1}^{N(N-1)/2} |f_i \cdot \vec{\alpha}|^2 = f^2 \frac{N}{2}, \tag{5.29}$$

so the monopole in $SU(N) \to U(1)^{N-1}$ has a lower bound to its mass $\sqrt{N/2}$ times that of the SU(2) monopole; also, ε will now depend an all other couplings in V.

VI. SU(N) POLYAKOV MODELS

If the fields of the Hamiltonian are time independent in $A_0 = 0$ gauge, then $\int d^3x\, H = S(A,\Theta)$; the Hamiltonian of the 3 + 1 dimensional theory corresponds to the Euclidean action for the 2 + 1 dimensional theory. The Euclidean functional integral of a d-dimensional quantum field theory corresponds to the classical partition function of a statistical system in d + 1 dimensions with Hamiltonian. (For the 2 + 1 dimensional gauge theory the fields can be re-scaled so that the corresponding temperature is $\hbar e^2$.) The Euclidean functional integral sums over all field configurations $\exp\{-S(A,\Theta)\}$; in the semiclassical approximation, which is characterized here by the dimensionless parameter $\hbar e^2/4\pi M_W$ being small (or low temperature relative to M_W), this functional integral is dominated by configurations with finite Euclidean action. Since the monopole is a finite energy, time independent $A_0 = 0$ gauge field configuration of the 3 + 1 dimensional theory, it is a finite Euclidean action configuration of the 2 + 1 dimensional theory. Also, the monopole is a solution of the time independent field equations and corresponds to a local minimum of $S(A,\Theta)$.

The action for configurations with more than one monopole is easily constructed in singular gauge. Space is divided into regions around the monopole cores and regions outside the cores. Outside the core regions the scalar fields point in the same direction over all of space and take an vacuum values, $(D_k \Theta_i = 0,\ V(\Theta_i) = 0)$, and the only long range fields are abelian, $(G_{ik}^{\text{charged}} = 0)$. The action is then

$$S \simeq \sum_n \left[\int_{|\vec{x}-\vec{R}_n| \le \frac{1}{M_W}} d^3x \{ \mathrm{tr} B_k^2 + \sum_{i=1}^{N(N-1)/2} \mathrm{tr}(D_k \Theta_i)^2 + V(\Theta_i) \} \right.$$

$$\left. + \int_{|\vec{x}-\vec{R}_n| \ge \frac{1}{M_W}} d^3x \, \frac{1}{2}(\vec{B}_k)^2 \right], \tag{6.1}$$

where $\vec{B}_k$ is the set of N-1 abelian magnetic fields. The superposition of Coulomb fields just gives the Coulomb interaction energies between the monopoles (plus approximately half the self energies of the monopoles), so

$$S \simeq \sum_n M_{\text{monopole}} + \frac{1}{2} \left(\frac{4\pi}{e}\right)^2 \sum_{n \ne n'} \frac{\vec{m}_n \cdot \vec{m}_{n'}}{4\pi |\vec{R}_n - \vec{R}_{n'}|} . \tag{6.2}$$

The monopoles interact through the Coulomb potentials of N-1 abelian charges, where $\vec{m}_n$ are N-1 component root vectors of SU(N). (Also the monopole "mass", M_{monopole}, is dimensionless in Euclidean 2 + 1 dimensions since e^2 now has dimensions of mass.)

Polyakov[3] considers expanding the 2 + 1 dimensional functional integral about configurations with an arbitrary number of monopoles and anti-monopoles; in the limit of very large seperations, these configurations approach minima of the Euclidean action. This turns out to be an expansion in powers of $\exp(-\frac{4\pi}{e^2} M_W \varepsilon)$ and $e^2/4\pi M_W$. The functional integral over all configurations, when approximated by this sum of configurations, corresponds to the grand canonical partition function for a monopole plasma. The grand canonical partition function for this monopole plasma can be re-expressed in terms of an effective generalized Sine-Gordon theory,

$$Z = \int \mathcal{D}A \mathcal{D}\Theta \, e^{-S(A,\Theta)}$$

$$\simeq \int \mathcal{D}\vec{\phi} \, e^{-\int \{ \frac{1}{2}(\nabla\vec{\phi})^2 - \frac{e^2}{16\pi^2} M^2 \sum_{|\vec{m}|} \cos(\frac{4\pi}{e} \vec{m}\cdot\vec{\phi}) \} d^3R} \tag{6.3}$$

where[3]

$$M^2 = \text{const.} \frac{M_W^{7/2}}{e^3} \exp(-\frac{4\pi}{e^2} M_W \varepsilon), \tag{6.4}$$

the coefficient of $\exp(-M_{\text{monopole}})$ arising from quantum fluctuations around the monopole configurations. In this effective field theory, $\vec{\phi}$ represents the N-1 component magnetic scalar potential; $e^{\pm i \frac{4\pi}{e} \vec{m}\cdot\vec{\phi}(\vec{R})}$ represents the exponential of i times the interaction energy of a (anti) monopole of charge $\frac{4\pi}{e}\vec{m}$ at position $\vec{R}$ in the presence of the potential of the other monopoles. If the interaction term is expanded in powers of $\frac{e^2}{32\pi^4} M^2 = \rho \exp\left(-M_{\text{monopole}}\right)$, the functional integral over $\vec{\phi}$ is easily done; the kinetic term $(\nabla_k \vec{\phi})^2 = B_k^2$ inserts Coulomb potentials between all pairs of $\vec{\phi}$'s,

$$\int \mathcal{D}\vec{\phi} \, e^{-\int d^3R \, \frac{1}{2}(\nabla\vec{\phi})^2}$$

$$\times \sum_{N=0}^{\infty} \frac{1}{N!} \left[\int d^3R_1 \rho e^{-M_{\text{monopole}}} \sum_{\vec{m}_1} e^{i \frac{4\pi}{e} \vec{m}_1 \vec{\phi}(\vec{R}_1)} \right]$$

$$\times \ldots \times \left[\int d^3R_N \rho e^{-M_{\text{monopole}}} \sum_{\vec{m}_N} e^{i \frac{4\pi}{e} m_N \cdot \vec{\phi}(\vec{R}_N)} \right]$$

$$= \sum_{N=0}^{\infty} \frac{1}{N!} \left(\int d^3R \rho e^{-M_{\text{monopole}}} \right)^N \sum_{\vec{m}} e^{-\frac{1}{2} \sum_{i \ne j} \left(\frac{4\pi}{e}\right)^2 \frac{\vec{m}_i \cdot \vec{m}_j}{4\pi |\vec{R}_i - \vec{R}_j|}} . \tag{6.5}$$

The problem of static quark confinement is studied by inserting a Wilson loop,

$$W(C) = \frac{tr}{N} P \exp(ie \oint_C A_k dx^k), \tag{6.6}$$

into the vacuum. The exponent can be re-expressed as i times $\int \vec{A}_k(x(s)) \cdot e \frac{\vec{\lambda}}{2} \frac{dx_k}{ds} ds$, where $e \frac{\vec{\lambda}}{2} \frac{dx_k}{ds}$ represents the electric current of a fundamental representation quark charge propagating along the path C, parameterized by a proper time s. The exponent then represents the interaction action of an electric current interacting with a vector potential. If $\vec{A}_k$ is the vector potential from a monopole at $\vec{R}$, its interaction with the electric current loop C is,

$$e\oint_C A_k(\vec{x}-\vec{R}) dx_k = e \int_{\partial S=C} \frac{\vec{\lambda}}{2} \cdot \frac{4\pi}{e} \vec{m} \frac{(\vec{x}-\vec{R})}{4\pi|\vec{x}-\vec{R}|^3} \cdot d\vec{S}_x$$

$$= \frac{4\pi}{e} \vec{m} \frac{\vec{\lambda}}{2} \Phi_C(\vec{R}). \tag{6.7}$$

The only components of $\frac{\vec{\lambda}}{2}$ that contribute are in the N-1 abelian directions, so

$$(\frac{\vec{\lambda}}{2}) = \begin{pmatrix} \vec{\mu}_1 & & & \\ & \vec{\mu}_2 & & \\ & & \ddots & \\ & & & \vec{\mu}_N \end{pmatrix}, \tag{6.8}$$

where the $\vec{\mu}_i$ are the N-1 component weight vectors of the fundamental representation. Now the expression (6.7) corresponds to the interaction energy between a magnetic charge of strength $\frac{4\pi}{e} \vec{m}$ located at $\vec{R}$ with the potential from a set of magnetic dipole sheets, the

magnetic dipoles of strength $e\vec{\mu}_i$ having a uniform density over the sheet bounded by the curve C of the Wilson loop.

The expectation value of the Wilson loop in the original field theory then takes the following form in the effective field theory,

$$< \frac{tr}{N} Pe^{i\oint_C A_k dx_k} > = \frac{1}{Z} \int \mathcal{D}A \mathcal{D}\Theta e^{-S(A,\Theta)} \frac{tr}{N} Pe^{i\oint_C A_k dx_k}$$

$$\simeq \frac{1}{N} \sum_{\vec{\mu}} \frac{1}{Z} \int \mathcal{D}\vec{\phi} e^{-\int d^3R\{\frac{1}{2}(\nabla\vec{\phi})^2 - \frac{e^2}{16\pi^2} M^2 \sum_{|\vec{m}|}}$$

$$\times \cos[\frac{4\pi}{e} \vec{m} \cdot (\vec{\phi} + \vec{\mu}\Phi_C(\vec{R}))]\}, \tag{6.9}$$

where again, $\Phi_C(\vec{R}) = \frac{e}{4\pi} \int_{\partial S=C} \nabla \frac{1}{|\vec{x}-\vec{R}|} \cdot d\vec{S}$; the sum over $\vec{m}$ is over all N(N-1)/2 positive adjoint representation roots, and the sum over $\vec{\mu}$ is over all N fundamental representation weights. The Wilson loop inserted into the monopole plasma behaves like a sheet of magnetic dipoles, and produces at large distance from the sheet a dipole magnetic field. The monopoles of the vacuum plasma, however, are polarized by this dipole field and react to produce a dipole field to try to cancel the field from the sheet. The magnetic potential is approximately determined from the classical field equations, for each $\vec{\mu}$,

$$-\nabla^2\vec{\phi} + \frac{e}{4\pi} M^2 \sum_{|\vec{m}|} \vec{m} \sin \frac{4\pi}{e} \vec{m} \cdot (\vec{\phi} + \vec{\mu}\Phi_C) = 0. \tag{6.10}$$

In terms of the total potential of the monopole plasma plus the dipole sheet,

$$\frac{e}{4\pi} \vec{X} = (\vec{\phi} + \vec{\mu}\Phi), \tag{6.11}$$

this equation becomes

$$-\nabla^2\vec{\chi}(\vec{R}) + M^2 \sum_{|\vec{m}|} \vec{m} \sin \vec{m}\cdot\vec{\chi}(\vec{R}) = 4\pi\vec{\mu} \int_{\partial S=C} d\vec{S}_k \cdot \nabla_k \delta^3(\vec{x}-\vec{R}). \tag{6.12}$$

With the ansatze of Wadia and Das,

$$\vec{\chi} = \vec{\mu}\chi, \tag{6.13}$$

we have

$$-\nabla^2 \frac{\chi}{2} + \frac{N}{2} M^2 \sin \frac{\chi}{2} = 2\pi \int_{\partial S=C} d\vec{S}_k \cdot \nabla_k \delta^3(x-\vec{R}) \tag{6.14}$$

The same equation is obtained for each $\vec{\mu}$. For the loop C in the t-x plane, we consider the solution to this equation well inside the loop where χ is approximately only a function of Y. The right hand side of this equation is $2\pi\ \delta'(Y)\theta_S(X,T)$, where $\theta_S(X,T)$ is one if X and T are on the surface S, and zero otherwise. If Eq. (6.14) is multiplied by Y and integrated from $Y = -\varepsilon$ to $+\varepsilon$, we obtain $\frac{\chi(\varepsilon)}{2} - \frac{\chi(-\varepsilon)}{2} = 2\pi$; the solution to this equation with this discontinuity is

$$\frac{\chi}{2}(Y) = 4\varepsilon(Y) \tan^{-1} e^{-\sqrt{\frac{N}{2}} M |Y|}, \tag{6.15}$$

where $\varepsilon(Y) = \begin{cases} 1 & Y > 0 \\ -1 & Y < 0 \end{cases}$. From this potential and Eq. (6.11) we obtain the total field,

$$\vec{B}_y(y) = -\frac{e}{4\pi}\frac{\partial\vec{\chi}}{\partial y}(y) = \vec{\mu}\,\frac{2e}{\pi} M\sqrt{\frac{N}{2}}\,\frac{e^{-\sqrt{\frac{N}{2}} M|y|}}{1 + e^{-2\sqrt{\frac{N}{2}} M|y|}}. \tag{6.16}$$

Far from the sheet the plasma can completely cancel the field from the sheet, although in a region of the thickness of the plasma screening

length, $1/\sqrt{\frac{N}{2}}\,M$, around the sheet, the field of the sheet is not completely canceled by the field of the plasma. This is because the monopoles that make up the dipole sheet have fundamental representation charge, while the monopoles of the vacuum have adjoint representation charge. There remains, then, across the sheet with the Wilson loop as boundary, magnetic flux with a thickness of the plasma screening length. This is a y-component of magnetic field, $\vec{B}_y$, which corresponds to the F_{tx} component of the field tensor. In Minkowski space-time, this corresponds to an electric field in the x-direction:

$$\frac{e}{4\pi}\left(-\frac{\partial}{\partial x}, -\frac{\partial}{\partial y}, -\frac{\partial}{\partial t}\right)\vec{\chi} = (\vec{B}_x, \vec{B}_y, \vec{B}_t)$$

$$= (\vec{F}_{yt}, \vec{F}_{tx}, \vec{F}_{xy}) \to (-E_y, E_x, B). \tag{6.17}$$

Thus on every time slice of the Minkowski space-time Wilson loop there is an electric flux tube, with the thickness of the plasma screening length, connecting the quark and anti-quark charges; the total electric flux is

$$\int_{-\infty}^{\infty} dy\ E_x(y) = \frac{e}{4\pi}\int_{0^+}^{\infty} dy\ \frac{\partial}{\partial y}\vec{\chi} + \frac{e}{4\pi}\int_{-\infty}^{0-} dy\ \frac{\partial}{\partial y}\vec{\chi}$$

$$= \frac{e}{4\pi}\left[\left(\vec{\chi}(\infty) - \vec{\chi}(0^+)\right) - \left(\vec{\chi}(-\infty) - \vec{\chi}(0^-)\right)\right] = -e\vec{\mu}. \tag{6.18}$$

Returning to Eq. (6.9), with (6.11), (6.13) and (6.15), the leading term[35] in the expectation value of the Wilson loop is then

$$\left\langle \frac{\mathrm{tr}}{N} P e^{i\oint_C A_k dx_k} \right\rangle$$

$$\simeq \text{const.}\ \exp\left(-\frac{e^2}{16\pi^2}\, 4\, \vec{\mu}^2 \int d^2R\ \{\tfrac{1}{2}(\nabla \tfrac{\chi}{2})^2 - \sqrt{\tfrac{N}{2}}\, M^2 \cos \tfrac{\chi}{2}\}\right)$$

$$= \text{const.}\ \exp\left(-\frac{e^2}{4\pi^2}\, \vec{\mu}^2 \varepsilon_{sol} XT\right), \tag{6.19}$$

where

$$\varepsilon_{sol} = 8M\sqrt{\frac{N}{2}} \tag{6.20}$$

is the energy of the 1-dimensional Sine-Gordon soliton transverse to the Wilson loop, and for the fundamental representation of SU(N),

$$\vec{\mu}^2 = \frac{N-1}{2N}\ . \tag{6.21}$$

VII. Z_N^* MAGNETIZATION AND DOMAINS IN SU(N) POLYAKOV MODELS.

We previously argued abstractly from the 't Hooft commutation relations that the $SU(N) \to U(1)^{N-1}$ models are dual to the SU(N) Mandelstam-Nielsen-Olesen superconductor models. We now explicitly demonstrate how 't Hooft's physical picture of the confining phase in 2 + 1 dimensions, that is implied by the commutation relations, is realized in these models.

We have previously seen how to express $\langle W(C)\rangle$ in the effective field theory; we must now consider $\langle M \rangle$. We will show that in Euclidean 2 + 1 dimensions, $M(\vec{x}^*)$ creates a monopole at the 3-dimensional point $\vec{x}^*$, with magnetic flux $\frac{4\pi}{e}\vec{\mu}$, where $\vec{\mu}$ is a fundamental representation weight. Since the only topologically stable monopoles in this theory have adjoint representation flux, this fundamental representation monopole must carry a Dirac string. (Intuitively, one can think of the Dirac string along C^* as the remnant of the world line of the vortex of the superconducting phase that comes from $t = -\infty$ and ends at $\vec{x}^*$; from there the flux can spread since the $U(1)^{N-1}$ symmetry is everywhere restored in the confining phase.)

M acts on A_k and Θ by gauge transforming them. Acting on the fields which dominated the semiclassical approximation to the functional integral, configurations with arbitrary numbers of monopoles and anti-monopoles in <u>singular gauge</u>,

$$A_k(\vec{x}) = \sum_a \vec{A}_k(\vec{x} - \vec{R}_a)\cdot\vec{H}, \tag{7.1a}$$

$$\Theta_i(\vec{x}) = \sum_a \vec{\Theta}_i(\vec{x} - \vec{R}_a)\cdot\vec{H}, \tag{7.1b}$$

the gauge transformation Ω can also be chosen in the abelian directions,

$$\Omega^{[\vec{x}^*]}(\vec{x}) = \exp[i\vec{\alpha}(\vec{x}-\vec{x}^*)\cdot\vec{H}]. \tag{7.2}$$

Therefore,

$$\Theta^{\Omega} = \Theta, \tag{7.3a}$$

$$A_k^{\Omega} = A_k + \frac{1}{e}\partial_k\alpha, \tag{7.3b}$$

where $\alpha = \vec{\alpha}\cdot\vec{H}$. For $\vec{x}^*$ at the origin of coordinates, a particular representation for $\vec{\alpha}$ is

$$\vec{\alpha} = 2\vec{\mu}\phi, \tag{7.4}$$

where $\vec{\mu}$ is a weight of the fundamental representation of SU(N), and ϕ is the azimuthal angle in spherical polar coordinates. The flux of this configuration through a curve C surrounding $\vec{x}^*$ in the x-y plane is,

$$\oint_C A_k^{\Omega}dx_k = \oint_C A_k dx_k + \frac{4\pi}{e}\vec{\mu}\cdot\vec{H}. \tag{7.5}$$

Therefore, this singular gauge transformation has created fundamental representation flux, $\frac{4\pi}{e}\vec{\mu}$, at $\vec{x}^*$.

Now consider the correlation function $\langle M(\vec{x}_2^*)M^{\dagger}(\vec{x}_1^*)\rangle$. If $\vec{x}_1^*$ and $\vec{x}_2^*$ are Minkowski space-time points seperated only in time, then the gauge transformation created by the Heisenberg representation operator $M^{\dagger}$ at $\vec{x}_1^*$ is propogated in time to $\vec{x}_2^*$ where it is undone. In Enclidean space-time, this creates a string from $\vec{x}_1^*$ to $\vec{x}_2^*$ around

which $\frac{1}{e}\oint\partial_k\vec{\alpha}\cdot\vec{H}dx_k = \frac{4\pi}{e}\vec{\mu}\cdot\vec{H}$. Because this gauge transformation is smooth over all of space except along the string, the magnetic flux arises from a non-zero magnetic field only along the string.

The Euclidean action for a monopole configuration A, Θ after the action of this gauge transformation is

$$S(A + \frac{1}{e}\nabla(\alpha_1-\alpha_2), \Theta) = S(A, \Theta)$$

$$+ \frac{4\pi}{e}\vec{m}\cdot\int d^3x\nabla\frac{1}{4\pi|\vec{R}-\vec{x}|}\cdot\nabla\times\vec{A}_{sing}, \tag{7.6}$$

where $\vec{R}$ is the position of the monopole, and

$$\nabla\times\vec{A}_{sing} = \frac{1}{e}\nabla\times\nabla(\vec{\alpha}_1-\vec{\alpha}_2) = \frac{4\pi}{e}\vec{\mu}\int_{C^*} d\vec{y}\,\delta^3(\vec{x}-\vec{y}), \tag{7.7}$$

where C^* runs from $\vec{x}_1^*$ to $\vec{x}_2^*$. We have neglected the constant action of the singular string, and made the approximation that the monopole is much farther than $1/M_W$ from the string. The interaction term is

$$(\frac{4\pi}{e})^2\vec{m}\cdot\vec{\mu}\int d^3x\nabla\frac{1}{4\pi|\vec{R}-\vec{x}|}\cdot\int_{C^*} d\vec{y}\,\delta^3(\vec{x}-\vec{y})$$

$$= (\frac{4\pi}{e})^2\vec{m}\cdot\vec{\mu}\int_{C^*} d\vec{y}\cdot\nabla\frac{1}{4\pi|\vec{R}-\vec{y}|}, \tag{7.8}$$

Retracing the derivation of the effective field theory, it follows that this correlation function can be expressed,

$$\langle M(\vec{x}_2^*)M^{\dagger}(x_1^*)\rangle = \frac{1}{N}\sum_{\vec{\mu}}\frac{1}{Z}\int\mathcal{D}\vec{\phi}\quad e^{-\int d^3R\{\frac{1}{2}(\nabla\vec{\phi})^2 - \frac{e^2}{16\pi^2}M^2\sum_{|\vec{m}|}\cos(\frac{4\pi}{e}\vec{m}\cdot\vec{\phi})\}}$$

$$e^{i\frac{4\pi}{e}\vec{\mu}\cdot\vec{\phi}(\vec{x}_2^*)} \times e^{i\frac{4\pi}{e}\vec{\mu}\cdot\vec{\phi}(\vec{x}_1^*)} \tag{7.9}$$

If this functional integral is dominated by the classical field, $\vec{\phi}$ satisfies

$$-\nabla^2\vec{\phi} + \frac{e}{4\pi} M^2 \sum_{|\vec{m}|} \vec{m} \sin\left(\frac{4\pi}{e}\vec{m}\cdot\vec{\phi}\right)$$

$$= i\,\frac{4\pi}{e}\,\vec{\mu}\left(\delta^3(\vec{R}-\vec{x}_1^*) - \delta^3(\vec{R}-\vec{x}_2^*)\right) \tag{7.10}$$

We are calculating the potential of a momopole- anti-monopole pair in a momopole plasma; the physics suggests linearization is legitimate so we have, for $\vec{\chi} = \frac{4\pi}{e}\vec{\phi}$,

$$-\nabla^2\vec{\chi}(\vec{R}) + M^2\sum_{m}\vec{m}(\vec{m}\cdot\vec{\chi}(\vec{R}))$$

$$= i\left(\frac{4\pi}{e}\right)^2\vec{\mu}\left(\delta^3(\vec{R}-\vec{x}_1^*) - \delta^3(\vec{R}-\vec{x}_2^*)\right) . \tag{7.11}$$

For $\vec{\chi} = \vec{\mu}\chi$, we have

$$\chi(\vec{R}) = i\left(\frac{4\pi}{e}\right)^2 \frac{e^{-\sqrt{\frac{N}{2}}\,M|\vec{x}_1^*-\vec{R}|}}{|\vec{x}_1^*-\vec{R}|} - i\left(\frac{4\pi}{e}\right)^2 \frac{e^{-\sqrt{\frac{N}{2}}\,M|\vec{x}_2^*-\vec{R}|}}{4\pi|\vec{x}_2^*-\vec{R}|} . \tag{7.12}$$

In this approximation, then, the correlation function becomes,

$$\langle M(\vec{x}_2^*)M^\dagger(\vec{x}_1^*)\rangle \simeq \exp\left\{-2\left(\frac{4\pi}{e}\right)^2\frac{N-1}{2N}\,\frac{e^{-\sqrt{\frac{N}{2}}\,M|\vec{x}_1^*-\vec{x}_2^*|}}{4\pi|\vec{x}_1^*-\vec{x}_2^*|}\right\} . \tag{7.13}$$

Due to the screening of the source monopoles by the vacuum monopole plasma, we have

$$\langle M(\vec{x}_2^*)M^\dagger(\vec{x}_1^*)\rangle \xrightarrow[|\vec{x}_1^*-\vec{x}_2^*|\to\infty]{} |\langle M\rangle|^2 \neq 0. \tag{7.14}$$

Therefore, the first ingredient of 't Hooft's physical picture of confinement in 2 + 1 dimensions, that there is a magnetization, $\langle M\rangle \neq 0$, is explicitly realized in our generalized Polyakov confinement models. We will show below how a domain of the effective magnetic system is created by a Wilson loop. We note in passing that since $-\ln\langle M(\vec{x}_2^*)M^\dagger(\vec{x}_1^*)\rangle$ is physically the interaction energy between a monopole and anti-monopole, in the superconducting phase where there is a magnetic vortex of flux $\frac{4\pi}{e}\vec{\mu}$, the interaction energy of a fundamental representation monopole and anti-monopole pair is proportional to $|\vec{x}_1^*-\vec{x}_2^*|$, so

$$\langle M(\vec{x}_2^*)M^\dagger(\vec{x}_1^*)\rangle \sim e^{-|x_1^*-\vec{x}_2^*|} \xrightarrow[|\vec{x}_1^*-\vec{x}_2^*|\to\infty]{} 0 . \tag{7.15}$$

Thus $\langle M\rangle = 0$ in the superconducting phase, reflecting the confinement of fundamental represention monopoles.

We next consider the important correlation function, $\langle M(\vec{x}^*)W(C)\rangle_{C^*}$. This can be expressed in the effective field theory,

$$\langle M(\vec{x}^*)W(C)\rangle_{C^*} = \frac{1}{N}\sum_{\vec{\mu},\vec{\mu}'}\frac{1}{Z}\int\mathcal{D}\vec{\phi}\,e^{-\int d^3R\{}$$

$$\frac{1}{2}(\nabla\vec{\phi})^2 - \frac{e^2}{16\pi^2}M^2\sum_m\cos\frac{4\pi}{e}\,m\cdot(\vec{\phi}+\vec{\mu}\Phi_C)\}$$

$$\times\, e^{ie\oint_C A_k^{sing}\,dx_k}\; e^{i\frac{4\pi}{e}\vec{\mu}\cdot(\vec{\phi}(x^*)+\vec{\mu}\Phi_C(\vec{x}^*))} \tag{7.16}$$

where the curve C^* now comes from infinity and ends at the fundamental representation monopole at $\vec{x}^*$. A_k^{sing} is the addition to the vector potential from the singular gauge transformation generated by $M(\vec{x}^*)$,

$$\oint_C A_k^{sing}\, dx_k = \oint_C dx_k \frac{1}{e}\, \partial_k \alpha^{sing}$$

$$= \frac{4\pi}{e} \vec{\mu}' \cdot \vec{\mu} \int_{\partial S = C} d\vec{S}_x \cdot \int_{C^*} d\vec{y}\, \delta^3(\vec{x}-\vec{y}) . \qquad (7.17)$$

There are two kinds of contributions from this term which arise from re-writing it as

$$\frac{4\pi}{e} \vec{\mu}' \cdot \vec{\mu} \Big[\oint_C d\vec{x} \cdot \int_{C^*} \frac{(\vec{x}-\vec{y})}{4\pi |\vec{x}-\vec{y}|} \times d\vec{y}$$

$$- \int_{\partial S = C} d\vec{S}_x \cdot \nabla_x \int_{C^*} d\vec{y} \cdot \nabla_y \frac{1}{4\pi |\vec{x}-\vec{y}|} \Big] . \qquad (7.18)$$

When C^* is a closed curve, the first term in square brackets is the linking number[24] of the curves C and C^*; it is a gauge invariant measure of the number of times the singular string pieces the sheet spanned by the Wilson loop. The second term gives the interaction energy of the Wilson loop and the string. When the string from infinity ends on a monopole at $\vec{x}^*$, this term is just

$$- \frac{4\pi}{e} \vec{\mu}' \cdot \vec{\mu} \int_{\partial S = C} d\vec{S}_y \cdot \nabla_y \frac{1}{4\pi |\vec{x}^* - \vec{y}|} \qquad (7.19)$$

the interaction energy of a monopole at $\vec{x}^*$ with the dipole potential of the sheet bounded by the Wilson loop; the string along C^* does not contribute to the interaction energy with the Wilson loop.

This effective field theory representation for the correlation function $\langle M(\vec{x}^*) W(C) \rangle_{C^*}$ physically corresponds to a fundamental representation magnetic dipole sheet with boundary C in an adjoint representation monopole plasma, interacting with a string of

fundamental representation magnetic flux along C^* that ends at a monopole at $\vec{x}^*$; $-\ln \langle M(\vec{x}^*) W(C) \rangle_{C^*} = F(\vec{x}^*, C^*; C)$ is the interaction free energy of this system. The classical equations for the vacuum monopole potentials due to these extra sources are,

$$-\nabla^2 \vec{\phi} + \frac{e}{4\pi} M^2 \sum_m \vec{m} \sin \frac{4\pi}{e} \vec{m} \cdot (\vec{\phi} + \vec{\mu}\Phi) = \frac{4\pi}{e} \vec{\mu}' \delta^3(\vec{x}^* - \vec{R}) \qquad (7.20)$$

or for the total potential of the system,

$$\frac{e}{4\pi} \vec{\chi} = \vec{\phi} + \vec{\mu}\Phi_C , \qquad (7.21)$$

$$- \nabla^2 \vec{\chi}(\vec{R}) + M^2 \sum_m \vec{m} \sin \vec{m} \cdot \vec{\chi}(\vec{R})$$

$$= 4\pi\, \vec{\mu} \int_{\partial S = C} d\vec{S}_y \cdot \nabla_y \delta^3(\vec{R}-\vec{y}) + \left(\frac{4\pi}{e}\right)^2 \vec{\mu}' \delta^3(\vec{x}^* - R) . \qquad (7.22)$$

While we have not solved these equations, we can extract the relevant behavior from physical arguments. We have previously seen that for $\langle M \rangle$ and $\langle W(C) \rangle$ seperately, the potential falls off exponentially with scale $\sim 1/M$. For $|\vec{x}^*| \gg 1/M$ and $|\vec{R}| \gg 1/M$, that is, for $|\vec{x}^*|$ far from the dipole sheet, the potential far from both is just the superposition of potentials,

$$\vec{\chi}^*(\vec{R}) \simeq 4\vec{\mu}\, \varepsilon(Y) \tan^{-1} e^{-\sqrt{\frac{N}{2}} M|Y|} + \vec{\mu}' \frac{e^{-M|R-x^*|}}{|\vec{R}-\vec{x}^*|} , , \qquad (7.23)$$

where $\vec{R} = (X, Y, Z)$. The Euclidean correlation function then factorizes,

$$\langle M(\vec{x}^*) W(C) \rangle \sim \langle M(\vec{x}^*) \rangle \langle W(C) \rangle . \qquad (7.24)$$

For our analysis, though, we need to understand the behavior of this correlation function as $\vec{x}^*$ passes through the sheet of the loop C. We therefore need to consider the region where the source monopole is close to the sheet. Considering the screened monopole close to the screened dipole sheet, we must make the perhaps crude approximation that the source monopole does not affect the potential of the screened dipole sheet. In this approximation the contribution to the correlation function from the interaction energy of the source monopole and the screened sheet is obtained by substituting the potential χ of Eq. (6.15), the solution to Eq. (6.14), into (refer to Eq. (7.16))

$$e^{i\frac{4\pi}{e}\vec{\mu}'\cdot(\vec{\phi}(\vec{x}^*)+\vec{\mu}\phi_C(\vec{x}^*))}$$

$$= e^{i\vec{\mu}'\cdot\vec{\chi}(\vec{x}^*)} = e^{i\vec{\mu}'\cdot\vec{\mu}\chi(\vec{x}^*)}. \tag{7.25}$$

We then have, using

$$\vec{\mu}_i\cdot\vec{\mu}_j = -\frac{1}{2N}+\frac{1}{2}\delta_{ij}, \tag{7.26}$$

and Eqs. (6.15), and (7.16)-(7.18),

$$\langle M(\vec{x}^*)W(C)\rangle_{C^*}$$

$$\simeq \langle M\rangle\langle W(C)\rangle \exp\left(\frac{-i4}{N}\varepsilon(y^*)\tan^{-1} e^{-\sqrt{\frac{N}{2}}M|y^*|}\right.,$$

$$\times \exp\left(\frac{-i4}{N}\oint_C d\vec{x}\cdot\int_{C^*}\frac{(\vec{x}-\vec{y})}{|\quad|}\,xd\vec{y}\right) \tag{7.27}$$

The first exponential term jumps from $e^{-i\frac{\pi}{N}}$ to $e^{i\frac{\pi}{N}}$ as y* crosses the flux tube from 0^+ to 0^-. Physically this discontinuity is due

to the source monopole having an attractive interaction with the dipole sheet on one side, and a repulsive interaction on the other side. From this result we obtain the important relations,

$$\langle M(0^+)W(C)\rangle_{C^*} = \langle M(0^-)W(C)\rangle_{C^{*\prime}}e^{i\frac{2\pi}{N}}. \tag{7.28a}$$

and

$$\langle M(0^+)W(C)\rangle_{C^*} = \langle M(0^-)W(C)\rangle_{C^*}, \tag{7.28b}$$

where (see Fig. (5)) C^* comes from $y^* = \infty$ to $\vec{x}^*$ on the + side of the sheet spanned by C, and $C^{*\prime}$ comes to $\vec{x}^*$ from $y^* = -\infty$ on the - side of the sheet; in the last expression C^* has crossed the sheet. The first of these equations shows there is a dynamical discontinuity of $e^{i\frac{2\pi}{N}}$ as $\vec{x}^*$ crosses the flux tube, but without a string crossing the flux tube. The second equation shows the dynamical discontinuity is compensated by a kinematic discontinuity as the string also crosses the flux tube. There is a branch cut extending, for example, between the two branch points where the space-time Wilson loop pierces the plane of a fixed time slice. For the contour C^* making a complete circuit around a branch point there is a kinimatic discontinuity of $e^{-i\frac{2\pi}{N}}$ coming from the $\exp(ie\oint_C A^{sing}_{k_{C^*}}dx^k)$ term. This kinimatic singularity compensates the dynamical one due to the electric flux tube so that in the confining phase $\langle M\rangle$ can approach the same constant far from the sheet in all spacial directions.[9] Thus the same result is obtained as $\vec{x}^*$ traverses either path shown in Fig. (6).

From this Euclidean result we now show that in Minkowski space-time, for a spacial Wilson loop, there is a discontinuity as M crosses

the electric vortex along the curve C of the Wilson loop. The behavior of the Euclidean correlation function we have just obtained as y^* is varied, corresponding to M moving through the sheet of the Wilson loop, is unchanged, by Euclidean invariance, if this picture is rotated by 90° around the x axis. C is now a spacial loop, and M moves through the plane of the loop as time is varied. If M is infinitesimally below the loop, with its string below the loop, then on analytically continuing to Minkowski space-time the Heisenberg operators should be ordered with M to the right of W. Similarly, if M is infinitesimally above the loop with its string above the loop, in the continuation the operators should be ordered with M to the left of W. From Eq. (7.28a) there is a discontinuity of $e^{i\frac{2\pi}{N}}$, confirming the operator commutation relations.

This discontinuity in Euclidean space-time is due to the discontinuity of the potential for the screened dipole sheet; in Minkowski space-time, from Eq. (6.17), this corresponds to a discontinuity across an electric flux sheet. Thus the discontinuity in the Minkowski space-time operator commutation relations is a discontinuity across an electric vortex. Combined with our explicit demonstration that $\langle M\rangle \neq 0$, we conclude that the electric vortex is a Bloch wall between two domains of magnetization, $\langle M\rangle$ and $e^{i\frac{2\pi}{N}}\langle M\rangle$. A transition from the Euclidean space-time correlation function $\langle M(\vec{x}^*)W(C)\rangle_{C^*}$, to the Minkowski space-time event of the creation, propogation, and annhilation of a spacial electric flux loop, seperating a magnetic bubble domain, can be pictured by folding up the Wilson loop as shown in Fig. (7).

VIII. BARYONS

We can now apply 't Hooft's physical picture of confinement to quide our understanding of baryons. In this section we specialize to SU(3). The baryonic analog of the mesonic Wilson loop oriented in space-time is[24]

$$B(C_1, C_2, C_3) = \frac{1}{3!}\epsilon_{\alpha_1\alpha_2\alpha_3}\epsilon_{\beta_1\beta_2\beta_3}\left(P e^{ie\int_{C_1} A_k dx_k}\right)_{\alpha_1\beta_1} \times \left(P e^{ie\int_{C_2} A_k dx_k}\right)_{\alpha_2\beta_2}\left(P e^{ie\int_{C_3} A_k dx_k}\right)_{\alpha_3\beta_3}, \tag{8.1}$$

where C_1, C_2, and C_3 are seperate curves that begin and end at the same end points $\vec{x}$ and $\vec{y}$. In Minkowski space-time, this operator creates a sum over permutations of color singlet combinations of three fundamental representation quarks at $\vec{x}$ which propogate along would lines C_1, C_2, and C_3, and annhilate at $\vec{y}$. For the paths shown in Fig. (8),

$$\langle B(C_1, C_2, C_3)\rangle \xrightarrow[T\to\infty]{} \exp[-V(\vec{x}_1, \vec{x}_2, \vec{x}_3)T], \tag{8.2}$$

where V is the interaction energy of three static quarks sources at the two dimensional spacial positions $\vec{x}_1$, $\vec{x}_2$, and $\vec{x}_3$.

Since SU(3) is spontaneously broken in our model to $U(1)\times U(1)$, the only long range fields are abelian. The contribution to the baryon loop from these long range fields simplifies to

$$\frac{1}{6}\sum_{(\text{perms of } \mu_1,\mu_2,\mu_3)} e^{ie\int_{C_1}\vec{\mu}_1\cdot\vec{A}_\ell dx_\ell} \times e^{ie\int_{C_2}\vec{\mu}_2\cdot\vec{A}_\ell dx_\ell}\, e^{ie\int_{C_3}\vec{\mu}_3\cdot\vec{A}_\ell dx_\ell}, \tag{8.3}$$

where the $\vec{\mu}_i$ are the two component weight vectors of the fundamental representation of SU(3). Because of this abelianization, the exponents can be added and re-arranged. Using $\vec{\mu}_1 + \vec{\mu}_2 + \vec{\mu}_3 = 0$ (since tr $\lambda^a = 0$), we can make the replacements

$$\vec{\mu}_1 \to \frac{\vec{\mu}_1 - \vec{\mu}_2 - \vec{\mu}_3}{2} \tag{8.4a}$$

$$\vec{\mu}_2 \to \frac{\vec{\mu}_2 - \vec{\mu}_1 - \vec{\mu}_3}{2}\ ; \tag{8.4b}$$

further, using

$$-\int_C \vec{A}_k dx_k = \int_{-C} \vec{A}_k dx_k, \tag{8.5}$$

where -C means the line integral is taken along C in the opposite direction, we have

$$\begin{aligned}\vec{\mu}_1 \cdot \int_{C_1} \vec{A}_k dx_k + \vec{\mu}_2 \cdot \int_{C_2} \vec{A}_k dx_k + \vec{\mu}_3 \cdot \int_{C_3} \vec{A}_k dx_k \\ = \left(\frac{\vec{\mu}_1 - \vec{\mu}_2}{2}\right) \cdot \int_{C_1 - C_2} \vec{A}_k dx_k + \frac{\vec{\mu}_3}{2} \int_{C_3 - C_1} \cdot \vec{A}_k dx_k - \frac{\vec{\mu}_3}{2} \cdot \int_{C_2 - C_3} \vec{A}_k dx_k\end{aligned} \tag{8.6}$$

From this we obtain a factorized expression for B,

$$\begin{aligned}B(C_1, C_2, C_3) &= \frac{1}{6} \sum_{\text{perms}} e^{ie\left(\frac{\vec{\mu}_1 - \vec{\mu}_2}{2}\right) \cdot \int_{C_1 - C_2} \vec{A}_k dx_k} \\ &\times e^{-ie \frac{\vec{\mu}_3}{2} \cdot \int_{C_2 - C_3} \vec{A}_k dx_k} \quad e^{ie \frac{\vec{\mu}_3}{2} \cdot \int_{C_3 - C_1} \vec{A}_k dx_k} \\ &= \frac{1}{6} \sum_{\text{perms}} W_{(\frac{1}{2},0)}(C_1 - C_2) W_{(0, \frac{1}{2\sqrt{3}})}(C_2 - C_3) W_{(0, -\frac{1}{2\sqrt{3}})}(C_3 - C_1),\end{aligned} \tag{8.7}$$

where, for example, $W_{(\frac{1}{2},0)}(C_1 - C_2)$ is an abelian Wilson loop along the closed curve $C_1 - C_2$ with charge $\frac{1}{2}$ e in the first abelian direction, and the sum over permutations puts the three different abelian charges on the three separate Wilson loops. Therefore, in this approximation in which all separations are much larger than $1/M_W$, the baryon operator has factorized into a product of three abelian Wilson loops.

Let us first consider the Coulomb fields in this SU(3) $\to$ U(1) $\times$ U(1) model. See Fig. (9). We have a super position of two Coulomb fields: the first is attractive between two quarks of charges $\pm\frac{e}{2}$; the second is repulsive between those quarks which have the same charge $e/2\sqrt{3}$, and attractive with the third quark of charge $-e/\sqrt{3}$. The sum of the two Coulomb interactions gives equally strong attractive interactions between all three quarks.

When the contribution of the vacuum monopoles is turned on, the minimum energy field configurations will no longer be Coulomb; we will show the minimum energy field configuration will have these field lines collapsed into the "Y" configuration of Fig. 10(a), as opposed to, for example, the "∇" configuration of Fig. 10(b).

The effects of the vacuum monopoles are described by the effective field theory. The baryon loop is

$$\begin{aligned}\langle B(C_1, C_2, C_3)\rangle = \frac{1}{3!} \sum_{\text{perms}} \frac{1}{Z} \int \mathcal{D}\vec{\phi} \exp -\int d^3x \left\{\frac{1}{2} (\nabla\vec{\phi})^2\right. \\ - \frac{1}{16\pi^2} M^2 \sum_m \cos \frac{4\pi}{e} \vec{m} \cdot \left(\vec{\phi} + \frac{\vec{\mu}_1 - \vec{\mu}_2}{2} \Phi_{C_1 - C_2}\right. \\ \left.\left. - \frac{\vec{\mu}_3}{2} \Phi_{C_2 - C_3} + \frac{\vec{\mu}_3}{2} \Phi_{C_3 - C_1}\right)\right\}.\end{aligned} \tag{8.8}$$

The adjoint representation monopoles of the vacuum plasma, which in general carry fields in both abelian directions, are interacting with the potential from three dipole sheets, each with a single abelian charge (since $\frac{\vec{\mu}_1-\vec{\mu}_2}{2} = (\frac{1}{2}, 0)$ and $\frac{\vec{\mu}_3}{2} = (0, -\frac{1}{2\sqrt{3}})$). The difference of charge on two adjacent sheets gives the fundamental representation quark charges, (see Fig. 11),

$$(\tfrac{1}{2}, 0) - (0, -\tfrac{1}{2\sqrt{3}}) = (\tfrac{1}{2}, \tfrac{1}{2\sqrt{3}})$$

$$(0, \tfrac{1}{2\sqrt{3}}) - (\tfrac{1}{2}, 0) = (-\tfrac{1}{2}, \tfrac{1}{2\sqrt{3}})$$

$$(0, -\tfrac{1}{2\sqrt{3}}) - (0, \tfrac{1}{2\sqrt{3}}) = (0, -\tfrac{1}{\sqrt{3}}) \qquad (8.9)$$

The positions of the sheets bounded by the Wilson loops are determined by minimizing the total energy; we must determine the potential from the product of the three dipole sheets immersed in the monopole plasma.

Consider the energy if the sheets are chosen in the "Y" configuration of Fig. 10(a). We can then consider the baryon loop to be a product of ordinary meson Wilson loops $C_1 - C$, $C_2 - C$, and $C_3 - C$, where C is the curve "going down" in the center of the "Y". From our previous analysis of meson loops, demonstrating that an electric vortex is a Bloch wall between Z_3^* domains, we see that in the limit of infinte separation of the quarks, the baryonic vortices are Z_3^* domain walls, as shown in Fig. 2.

If we consider the configuration where the sheets are "delaminated", as in Fig. 10(b) or Fig. 11, then the energy of such a "∇"

configuration must be larger than that of the "Y" configuration. We could imagine a $(\frac{1}{2}, 0)$ flux tube between the $(\frac{1}{2}, \frac{1}{2\sqrt{3}})$ and $(-\frac{1}{2}, \frac{1}{2\sqrt{3}})$ quarks, and $(0, \pm\frac{1}{2\sqrt{3}})$ flux tubes between the $(\pm\frac{1}{2}, \frac{1}{2\sqrt{3}})$ and $(0, -\frac{1}{\sqrt{3}})$ quarks. We now consider the effect of moving the sheets bounded by the Wilson loops For simplicity, let us first consider delaminating the sheets in the meson case. If we redefine variables in the effective field theory for $\langle W(C)\rangle$, Eq. (6.9), using instead of the monopole potential the total potential,

$$\vec{\chi} = \frac{4\pi}{e}(\vec{\phi} + \vec{\mu}\phi_C); \qquad (8.10)$$

then the Euclidean action becomes

$$\frac{e^2}{16\pi^2}\int d^3R\,\{\tfrac{1}{2}[\nabla(\vec{\chi} - \tfrac{4\pi}{e}\vec{\mu}\phi_C)]^2 - M^2\sum_{\vec{m}}\cos\vec{m}\cdot\vec{\chi}\}$$

$$= \frac{e^2}{16\pi^2}\int d^3R\{\tfrac{1}{2}(\nabla\vec{\chi})^2 - M^2\sum_{\vec{m}}\cos\vec{m}\cdot\vec{\chi}\}$$

$$+ \vec{\mu}^2\int d^3R\,\tfrac{1}{2}(\nabla\phi_C)^2$$

$$- \frac{e}{4\pi}\int d^3R\,\nabla\vec{\chi}\cdot\vec{\mu}\nabla\phi_C\,. \qquad (8.11)$$

The next to last term is the Coulomb energy of the dipole field times the time. The last term in Eq. (8.11) represents the interaction of the string field, that is, the total field of the dipole sheet plus plasma, $\nabla\vec{\chi}$, with the Coulomb field from the dipole sheet, $\nabla\phi_C$, which can be re-expressed,

$$-\left(\frac{e}{4\pi}\right)^2 \vec{\mu}^2 \int d^3R\ \nabla\chi(R)\cdot\ \nabla_R \int d\vec{S}_y\cdot\nabla_y\ \frac{1}{4\pi|\vec{R}-\vec{y}|}$$

$$= -\left(\frac{e}{4\pi}\right)^2 \vec{\mu}^2 \int d^3R\ \chi(R) \int d\vec{S}\cdot\nabla_y \delta^3(\vec{R}-\vec{y})$$

$$= -\left(\frac{e}{4\pi}\right)^2 \vec{\mu}^2 \int_{\partial S=C} d\vec{S}\cdot\nabla\chi; \tag{8.12}$$

This is the magnetic field of the flux tube integrated over the surface S bounded by C. If this surface $S = S_1$ is changed to S_2, then using

$$\int_{\partial S_1=C} d\vec{S}\cdot\nabla\chi - \int_{\partial S_2=C} d\vec{S}\cdot\nabla\chi = \int_{\partial V=S_1-S_2} dV\nabla\cdot(\nabla\chi), \tag{8.13}$$

there is an extra term in (8.13), (using Eq. 6.17),

$$\left(\frac{e}{4\pi}\right)^2 \vec{\mu}^2 \int_{\partial V=S_1-S_2} d^3x\ \nabla^2\chi = \frac{e}{4\pi}\vec{\mu}\cdot\int_{\partial V=S_1S_2} d^3x\ \nabla\cdot\vec{B}, \tag{8.14}$$

corresponding to the net magnetic charge within the volume V between the surfaces S_1 and S_2. Since the plasma is polarized by the dipole sheets, we expect a contribution proportional to the monopole density times the volume. From Eq. (6.16) for B_y, for small deformations, we have the extra contribution to the Euclidean action,

$$\frac{e^2}{4\pi^2}\vec{\mu}^2\ \frac{N}{2}\ M^2V. \tag{8.15}$$

Therefore, there is a "harmonic" restoring force trying to prevent

the sheets from delaminating. Such excitations of the sheets may be phenomenologically relevant for mesonic heavy quark systems.

Returning to the baryon case, we therefore expect an additional energy for the "∇" configuration proportional to the area of the triangle as opposed to the sum of the lengths of the arms of the "Y".

IX. DUAL JOSEPHSON JUNCTION

While it is easy to demonstrate confinement in these models, it is less easy to understand it. We now consider how a magnetic screening mechanism in Euclidean space-time is related to a dual Meissner effect in Minkowski space-time. Since monopoles play a crucial role in Euclidean space-time, and since they are instantons of the 2 + 1 dimensional theory, they therefore correspond to tunneling events which will dominate the Minkowski space-time physics. We confine our discussion to SU(2).

The nature of the vacuum tunneling can be analyzed from the $A_t = 0$ gauge monopole; as $t \to \pm\infty$, this configuration should approach the degenerate vacuua that are being connected by the tunneling event. For the SU(2) monopole, the gauge transformation to $A_t = 0$ gauge is[23]

$$A_t^{\Omega} = 0 = \Omega A_t \Omega^{-1} + \frac{i}{e}\Omega\partial_t\Omega^{-1}, \tag{9.1}$$

with

$$\Omega(x) = e^{i\hat{\phi}\cdot\frac{\vec{\tau}}{2}\omega(r,t)}, \tag{9.2}$$

where r,ϕ are polar coordinates in the x-y plane, and

$$\omega(r,t) = (\tan^{-1}\frac{t}{r} + \frac{\pi}{2}) - \int_{\infty}^{r}\frac{rK(r,t')}{r^2 + t'^2}\, dt', \tag{9.3}$$

where K is the function in the 't Hooft-Polyakov ansatze for the monopole vector potential, Eq. (5.10a). The integral term vanishes

like $e^{-M_W r}$ for $r \gg 1/M_W$. Asymptotically,

$$\Omega = \begin{cases} \exp i\frac{\pi}{2}(n^* + 1)\hat{\phi}\cdot\vec{\tau}, & t \to \infty \\ \exp i\frac{\pi}{2}n^*\hat{\phi}\cdot\vec{\tau}, & t \to -\infty \end{cases} \tag{9.4}$$

since

$$\tan^{-1}\frac{t}{r} = \begin{cases} (n^* - \frac{1}{2})\pi, & t \to -\infty \\ (n^* + \frac{1}{2})\pi, & t \to \infty \end{cases} \tag{9.5}$$

where n^* is an integer. The x and y components of A^{Ω} approach pure gauges

$$(A_x^{\Omega}, A_y^{\Omega}) = \Omega(A_x, A_y)\Omega^{-1} + \frac{i}{e}\Omega(\frac{\partial}{\partial x}, \frac{\partial}{\partial y})\Omega^{-1} \xrightarrow[t\to\pm\infty]{} \frac{i}{e}\Omega(\partial_x, \partial_y)\Omega^{-1}, \tag{9.6}$$

and the scalar field approaches the perturbative vacuum,

$$\Theta^{\Omega} = \Omega\Theta\Omega^{-1} \xrightarrow[t\to\pm\infty]{} f\frac{\tau^3}{2}. \tag{9.7}$$

The magnetic flux topological charge associated with $\Pi_2(SU(2)/U(1))$ can be expressed in terms of topological charges associated with $\Pi_1(U(1))$; in $A_t = 0$ gauge we have

$$\oint_{S^2} d^2S_i \frac{1}{2}\epsilon_{ijk}[\hat{\Theta}\cdot\vec{G}_{jk} - \frac{1}{e}\hat{\Theta}\cdot(D_j\hat{\Theta} \times D_k\hat{\Theta})]$$

$$= \oint_{C(t=+\infty)} dx_a(\vec{\Theta}\cdot\vec{A}_a) - \oint_{C(t=-\infty)} dx_a(\vec{\Theta}\cdot\vec{A}_a)$$

$$= \frac{4\pi}{e}n^*(t = +\infty) - \frac{4\pi}{e}n^*(t = -\infty), \tag{9.8}$$

where C is a contour along the boundary of the x-y plane. For the gauge transformation of Eqs. (9.2) - (9.4), the pure gauge vacuua (Eq. (9.6)) at $t = \pm\infty$ can have non zero topological charge; if $n^*(t = -\infty) = n^*$ then $n^*(t = +\infty) = n^* + 1$. Therefore, there are an infinate number of vacuua with non zero topological charge. Since the topological charge corresponds to magnetic charge, we have a picture of the tunneling process as connected two vortex-like vacuua differing by $\frac{4\pi}{e}$ of magnetic charge. Also, while the topological charge is globally defined, the tunneling event is local in space-time. These points will be important for our following analysis.

The set of all time independent gauge transformations breaks up into homotopy classes (all gauge transformations in a given class can be transformed into one another by conjugation with gauge transformation of the form $\exp(i\alpha(\vec{x})T_3)$, for which $\alpha(\vec{x}) \xrightarrow[|\vec{x}|\to\infty]{} 0$). The classes correspond to elements of $\Pi_1(U(1)) \simeq Z$ which maps the boundary of 2-dimensional space onto the U(1) subgroup of SU(2) associated with the direction of the unbroken gauge symmetry. Gauge transformations of the form

$$\Omega^{n^*}(\vec{x}) = \exp i\,\frac{\pi}{2}\left(\frac{x\tau_y - y\tau_x}{\sqrt{x^2+y^2}}\right)n^* \tag{9.10}$$

characterize the n^*'th class. The change in homotopy class associated with this transformation charges the abelian magnetic flux by $\frac{4\pi}{e}n^*$. This charge in flux occurs locally,

$$\begin{aligned} B &\equiv \frac{1}{2}\,\varepsilon_{zjk}[\hat{\Theta}\cdot\vec{G}_{jk} - \frac{1}{e}\,\hat{\Theta}\cdot(D_j\hat{\Theta}\times D_k\hat{\Theta})] \\ &\to B(\vec{x}) + \frac{4\pi}{e}\,n^*\,\delta^2(\vec{x}-\vec{R})\ . \end{aligned} \tag{9.11}$$

The Hamiltonian, which is invariant under this gauge transformation, is therefore periodic in the abelian magnetic field! (It is in this sense that this theory is periodic and compact[24] QED.)

Because of this periodicity of H in B, we consider a canonical formulation of the theory in which $B(\vec{x})$ are canonical coordinates (for the charged gauge fields, the transverse vector potenials are canonical coordinates, as usual). The unitary transformation T^{n^*} associated with Ω^{n^*} acts on the wavefunctional by translating the abelian magnetic field (we suppress writing the other canonical coordinates),

$$T^{n^*}(\vec{R})\,\psi[B(\vec{x})] = \psi[B(\vec{x}) + \frac{4\pi}{e}\,n^*\delta^2(\vec{x}-\vec{R})]. \tag{9.12}$$

Since [T, H] = 0, we must simultaneously diagonalize T and H (as in the Bloch wave problem of an electron in a periodic crystal). Consider, then, the wavefunctional,

$$\psi_\phi[B] \equiv \sum_{n^*=-\infty}^{\infty} \int d^2R\; e^{i\frac{4\pi}{e}n^*\phi(R)}\,\psi[B(\vec{x}) + \frac{4\pi}{e}\,n^*\delta^2(\vec{x}-\vec{R})]. \tag{9.13}$$

Under the action of T,

$$T(\vec{R})\psi_\phi[B] = e^{i\frac{4\pi}{e}\phi(R)}\,\psi_\phi[B], \tag{9.14}$$

where $\exp i\,\frac{4\pi}{e}\,\phi(R)$ is the eigenfunction of the unitary operator, T(R). This wavefunctional can also be expressed as

$$\psi_\phi[B] = e^{i\int d^2x B(\vec{x})\phi(\vec{x})}\,\tilde{\psi}[B], \tag{9.15}$$

which behaves correctly under the action of T for $\tilde{\psi}$ a periodic functional of B. This form of the wavefunctional implies that ϕ and B are canonically conjugate,

$$[\phi(\vec{x},t),\ B(\vec{x}',t)] = i\delta^2(\vec{x}-\vec{x}'). \tag{9.16}$$

The abelian magnetic and transverse electric fields can be expressed in terms of ϕ,[27]

$$B = \frac{\partial\phi}{\partial t}, \tag{9.17a}$$

$$E_x^{tr} = \frac{\partial\phi}{\partial y}, \tag{9.17b}$$

$$E_y^{tr} = -\frac{\partial\phi}{\partial x} \tag{9.17c}$$

which are the dual of the relations between the fields and the ordinary vector potential.

Instead of constructing a trial variational wavefunctional, we will physically motivate an approximation to the ground state energy. Consider the matrix elements of H with the wavefunctional, $\psi_\phi[B,\ldots]$,

$$\int \mathcal{D}B\ldots\psi_\phi^\dagger[B,\ldots]\int d^2x\, H(\vec{x})\psi_\phi[B,\ldots], \tag{9.18}$$

where the dots refer to the other canonical coordinates. There are tunneling terms that change n^*, and terms that do not. If we consider

only tunneling between nearest neighbor vacuua, $n^* \to n^* \pm 1$, then, using simplified notation where

$$|\phi> = \psi_\phi[B,\ldots], \tag{9.19}$$

$$|\phi> = \Sigma e^{i\frac{4\pi}{e}n^*\phi}|n^*>, \tag{9.20}$$

with

$$|n^*> = \psi[B(\vec{x}) + \frac{4\pi}{e}n^*\delta^2(\vec{x}-\vec{R})], \tag{9.21}$$

we have

$$<\phi|H|\phi> = \int d^2x(\varepsilon - \frac{e^2}{16\pi^2}M^2\cos\frac{4\pi}{e}\phi(\vec{x})); \tag{9.22}$$

here ε is the energy density in each homotopy sector, and

$$<n^*\pm 1|\ H\ (x)|n^*> \simeq -\frac{e^2}{16\pi^2}M^2, \tag{9.23}$$

is the tunneling amplitude which can be computed either from the Euclidean functional integral,[33] or using a functional WKB like approximation.[25] Apart from their contribution to the tunneling amplitude, the only contribution of the heavy charged vector fields and heavy neutral scalar field to the long distance effective Hamiltonian is vacuum fluctuation energy, and this will be subtracted out. The dominant non tunneling contribution to the long distance effective Hamiltonian is just the energy of the long range abelian fields. We therefore consider the energy functional

$$E(\phi) = \int d^2x\{\frac{1}{2}(\varepsilon_{ij}\nabla_j\phi)^2 + \frac{1}{2}(\frac{\partial\phi}{\partial t})^2 - \frac{e^2}{16\pi^2}M^2\cos\frac{4\pi}{e}\phi\}. \tag{9.24}$$

Static quark sources impose an external electric field on this system which can affect the ϕ distribution. For static quark sources of abelian charge $\pm\frac{e}{2}$ (corresponding to fundamental representation quarks) at $x = \pm\frac{R}{2}$, the energy functional becomes

$$E(\phi) = \int d^2x \, \{\frac{1}{2}\,(\frac{\partial\phi}{\partial y})^2 + \frac{1}{2}\,(-\frac{\partial\phi}{\partial x})^2$$

$$+ \frac{1}{2}\,(\frac{\partial\phi}{\partial t})^2 - \frac{e^2}{16\pi^2}\,M^2\,\cos(\frac{4\pi}{e}(\phi+\Phi))\}, \qquad (9.25)$$

where

$$\Phi = \frac{e}{2}\,[\tan^{-1}(\frac{x+R/2}{y}) - \tan^{-1}(\frac{x-R/2}{y})] \qquad (9.26)$$

is the potential from two steady currents. The equation for ϕ that minimizes the energy in the presence of the quark sources can be written in the form,

$$\frac{\partial B}{\partial t} + \nabla \times \vec{E} = \frac{e^2}{16\pi^2}\,M^2\,\sin\frac{4\pi}{e}\,(\phi + \Phi), \qquad (9.27)$$

where we have used Eq. (9.17) for E and B in terms of ϕ. From this equation, (which we could have written by analytically continuing the Minkowski space-time Equation (6.10) using Eq. (6.17)), the physics can be understood. The right hand side represents a magnetic current. From our analysis of the topological charge we had a picture of the tunneling process as connecting two vortex like vacuua differing by $\frac{4\pi}{e}$ of magnetic charge. Therefore associated with the tunneling is a magnetic current. The tunneling

current depends on the external potential Φ. Since the tunneling process is a magnetic current, it induces electric field loops in the plane. The term in the energy density associated with coupling the degenerate states through tunneling, $-\frac{e^2}{16\pi^2}\,M^2\cos\frac{4\pi}{e}\phi$, lowers the energy of the system, while the fields induced by the tunneling process increase the energy of the system. The external Coulomb field induces the tunneling currents and the associated fields. The system must minimize its total energy by balancing these contributions. It can do it by having the electric loops from the tunneling processes cancel the external Coulomb electric field almost everywhere, leaving an electric flux tube. The tunneling current distribution,

$$J = \frac{e^2}{16\pi^2}\,M^2\sin(4\varepsilon(y)\tan^{-1}e^{-M|Y|}), \qquad (9.28)$$

goes up on one side of the flux tube and down on the other, vanishing in the middle of the flux tube.

The physics of the electric flux tube is dual to the physics of a magnetic flux tube in the insulating layer of a Josephson junction.[6] Consider a 2-dimensional plane (x-y plane) which is to be thought of as a thin insulating layer.[34] Above and below this insulating plane consider superconducting materials. If a monopole- anti-monopole pair is placed in the insulating plane, we expect the magnetic field to be essentially confined to the insulating plane since the magnetic field can not penetrate the superconductors above and below the plane. We might therefore expect a 2-dimensional Coulomb field confined to the insulating plane. However Cooper pairs can tunnel from one superconductor through the plane to the other superconductor.(Because

each superconductor is a condensate of Cooper pairs, states formed by adding or subtracting Cooper pairs are degenerate in energy.) The tunneling of a Cooper pair is a transfer of electric charge, that is, an electric current through the insulating plane. Such a current induces magnetic loops in the insulating plane. The system minimizes its total energy by having these tunneling processes correlated so that the magnetic loops induced by the tunneling processes cancel the Coulomb magnetic field except for a magnetic flux tube.

In the Josephson junction case, ϕ is interpreted as the phase difference of the wavefunctions of the two superconductors. One first thinks in a non gauge invariant way in which each superconductor is in one of its degenerate vacuua associated with the spontaneous symmetry breaking ground state, the different vacuua corresponding to different values of the phase of the wavefunction. The two superconductors can have different directions of spontaneous symmetry breaking; tunneling is a manifestion of this phase difference, the current being proportional to $\sin\phi(x,y)$. To make the analysis gauge invariant, the phase difference ϕ must be replaced by

$$\phi \to \phi - e\int A_\mu dx^\mu, \tag{9.29}$$

where the line integral is taken from one superconductor through the insulator to the corresponding point in the other superconductor. This constraint of gauge invariance implies relations between changes in the phase difference and fields,[6]

$$E_z \propto \frac{\partial\phi}{\partial t}$$

$$B_x \propto \frac{\partial\phi}{\partial y}$$

$$B_y \propto -\frac{\partial\phi}{\partial x}\,. \tag{9.30}$$

These relations are dual to the equations for the Polyakov model, as was first recognized by Hosatani.

X. FINAL REMARKS

The 't Hooft commutation relations in 2 + 1 dimensions imply that confinement arrises from $\langle M \rangle \neq 0$. In the superconducting phase M creates a magnetic vortex soliton excitation in the 2-dimensional plane of space, in Minkowski space-time; in Euclidean space-time the world line of this soliton is a magnetic vortex line. The transition to the confining phase is then characterized by a vortex condensate, or in Euclidean space-time a "Z_N^* fluxon spagetti vacuum." Such a spagetti vacuum restores the abelian gauge symmetry, as was shown explicitly by Samuel.[24] However, such a spagetti vacuum does not, in and of itself, give confinement.

Our analysis of the vacuum of the $SU(N) \to U(1)^{N-1}$ models suggests there should still be tunneling processes even in the superconducting phase where $U(1)^{N-1}$ is spontaneously broken. The monopole instatons in the superconducting phase will no longer interact like a plasma, though. Diamagnetic supercurrents will screen the monopole's abelian field into flux tubes; the monopole instantons are "confined" by vortices in the superconducting phase. (Of course an adjoint representation 't Hooft loop, does not have an area law since dymanical adjoint representation monopole excitations can screen it. This is why an adjoint representation magnetic vortex is unstable.) A fundamental representation Wilson loop in the superconducting phase is screened by the adjoint representation electric charges of the vacuum condensate. The vacuum monopoles can now only interact with the Wilson loop if they are within this screening length. They no longer interact with the

Wilson loop as if the sheet bounded by C was a magneitc dipole sheet. The only effects of the vacuum tunneling in the superconducting phase, then, are possibly very small contributions to coupling and mass renormalization. When the abelian gauge symmetry is restored by the spagetti vacuum, however, the monopoles are liberated. It is the correlations of the monopole instanton plasma that confines quarks.

The $SU(N) \to U(1)^{N-1}$ models in 2 + 1 dimensions have the confinement features we expect of the pure SU(N) gauge theories without the additional scalar fields. These models are explicit in that there is a well defined justifiable semiclassical approximation method; all connections are systematically calculable, and for appropriate ranges of the parameters can be shown (in principle) to be small.

't Hooft[8] has recently shown that a unitary like gauge can be chosen for the pure SU(N) Yang-Mills theory which picks out as the relevant degrees of freedom in 2 + 1 dimensions exactly those of the models we have considered, N-1 abelian gauge fields interacting with monopoles. The monopoles arise due to points in space where this gauge fixing perscription is singular. Just selecting a set of dynamical variables does not insure the dynamics is simple in terms of these variables, though. Because of the difficulty of trying to understand asymptotic freedom in terms of these variables, 't Hooft also considers intermediate gauges that interpolate between this unitary gauge, appropriate for the long distance physics, and ordinary renormalizable gauges appropriate for the short distance physics. Such gauges, though, introduce additional

"phantom soliton" degrees of freedom that would play an important role in the transition region. Our models with explicit scalar fields, however, suggest that confinement may be easily understood in terms of the degrees of freedom of 't Hooft's unitary gauge. We therefore expect these models may be good effective field theories of the long distance physics of the pure gauge theory, and thus offer a good description of the physics of confinement in 2 + 1 dimensions.

ACKNOWLEDGMENT

I would like to thank Korkut Bardakci, Sidney Coleman, Jeff Greensite, Stanley Mandelstam, Helen Quinn, and Marvin Weinstein for conversations that improved my understanding of particular aspects of this work. This work was supported by the Director, Office of Energy Research, Office of High Energy and Nuclear Physics, Division of High Energy Physics of the U.S. Department of Energy under Contract DE-AC03-76SF00098.

REFERENCES

1. S. Mandelstam, Phys. Lett. 53B, 476 (1975).
2. G. 't Hooft, Nucl. Phys. B138, 1 (1978).
3. A. Polyakov, Nucl. Phys. B120, 429 (1977).
4. H. B. Nielsen and P. Olesen, Nucl. Phys. B61, 45 (1973).
5. Y. Hosatani, Phys. Lett. 69B, 499. (1977).
6. B. Josephson, Advances in Physics 14, 419. (1965).
7. S. Wadia and S. Das, Phys. Lett. 106B, 386 (1981).
8. G. 't Hooft, Nucl. Phys. B190 [FS3], 455 (1981).
9. A. Ukawa, P. Windey and A. Guth, Phys. Rev. D21, 1013 (1980).
10. H. Georgi and S. Glashow, Phys. Rev. Letters 28, 1494 (1972).
11. With a non-quartic potential, only one Ⓗ and one Φ are necessary. Since we chose to restrict ourselves to quartic potentials we need more than one Ⓗ and Φ. The number of scalar fields and the form of the potential can be chosen so that the combinations given below are satisfied. Some of these points will be clarified in the next section on monopoles where we need to be more explicit.
12. H. Tze and Z. Ezawa, Phys. Rev. D14, 1006 (1976).
13. Actually, M creates a singularity that drives the vortex solution to the classical equations. See F. Englert, "Electric and Magnetic Confinement Schemes", in "Hadron Structure and Lepton-Hadron Interactions, Cargese 1977", edited by M. Lévy et al. (Plenum, 1979).
14. F. Englert and P. Windey, Phys. Rev. D14, 2728 (1976).

15. F. Englert and P. Windey, Phys. Pep. 49C, 173 (1979).
16. A similar singular gauge will be discussed for monopoles. The charged scalar fields that wind around the vortex (for example, pointing radially outward) are gauge transformed to point in the same direction. This gauge transformation is smooth if restricted to exclude a wedge around the -x axis; if this wedge is shrunk there is a singularity.
17. G. 't Hooft, Nucl. Phys. B79, 276 (1974).
18. A. M. Polyakov, JETP Lett. 20, 194, (1974), JETP 41, 988 (1975).
19. J. Arafune, P.G.O. Freund and C. J. Goebel, J. Math. Phys. 16, 433 (1975).
20. E. B. Bogomolnyi, Sov. J. Nucl. Phys. 24, 449, (1976). S. Coleman, S. Parke, A. Neveu, C. M. Sommerfield, Phys. Rev. D15, 544 (1977).
21. M. K. Prasad and C. M. Sommerfield, Phys. Rev. Lett. 35, 760 (1975).
22. F. A. Bais, Phys. Rev. D18, 1206 (1978).
23. E. Weinberg, Nucl. Phys. B167, 500 (1980).
24. S. Samuel, Nucl. Phys. B154, 62 (1979).
25. A. Guha, Nucl. Phys. B171, 509 (1980).
26. B can be restricted to a finite range; see Eq. (9.15) and Reference 27.
27. S. Drell, H. Quinn, B. Svetitsky and M. Weinstein, Phys. Rev. D19, 619 (1979).
28. A. M. Polyakov, Phys. Lett. 59B, 82 (1975).
29. T. Banks, R. Myerson and J. Kogut, Nucl. Phys. B129, 493 (1977).
30. R. Savit, Phys. Rev. Lett. 39, 55 (1977), Phys. Rev. B17, 1340 (1978).

31. D. G. Bouluare, L. S. Brown, R. N. Cahn, S. D. Ellis and C. Lee, Phys. Rev. D14, 2708 (1976).

32. P. Goddard and D. I. Olive, Rep. Prog. Phys. 41, 1357 (1978).

33. C. Callan, R. Dashen and D. Gross, Phys. Rev. D17, 2717 (1978).

34. Because this insulating layer has a finite thickness, it can support magnetic fields "in the plane".

35. There is actually a non-leading area law term, corresponding to the interaction energy of the total screened magnetic field (string field) with the coulomb dipole field of the loop. From Eqs. (8.13) and (6.16), this term increases the string tension of Eq. (6.19) by a factor (1 + 1/8).

36. The discussion of 't Hooft-Polyakov monopoles in SU(2) → U(1) given below is a summary of well known material. See the excellent reviews of Reference 32, and S. Coleman, "The Magnetic Monopole Fifty Years Latter", Erice Lectures 1981.

FIGURE CAPTIONS

Fig. 1. Magnetic Z_N^* domains with Bloch wall electric vortex along the curve C of the Wilson loop.

Fig. 2. Z_3^* domains with electric vortex Bloch walls in a baryonic configuration.

Fig. 3. SU(3) weight diagram for (anti) fundamental and adjoint representations.

Fig. 4. Sheet of discontinuities, across which Ω jumps by $e^{i\frac{2\pi}{N}}$, bounded by a magnetic vortex loop along the curve C^* of the 't Hooft loop. A Wilson loop on a Euclidean time slice measures the magnetic flux through C.

Fig. 5. Dirac strings C^* and $C^{*\prime}$ on a Euclidean time slice through a Wilson loop C.

Fig. 6. Contours of Dirac strings on a Euclidean time slice through a Wilson loop C. A branch cut extends between the branch points where C pierces the plane of the slice. The discontinuity across the branch cut is compensated, for the contour at left, by the physical discontinuity across the electric flux tube.

Fig. 7. Folding up Euclidean Wilson loop and continuing to Minkowski space-time. In top figure there is a physical discontinuity across the sheet of the Euclidean Wilson loop (c.f. Eq. 7.28a); in botton figure the sheet of the former Wilson loop forms a surface of electric flux between magnetic domains. In Minkowski space-time, the time evolution of a spacial Wilson loop creates a magnetic bubble domain.

Fig. 8. Baryon loop. In Minkowski space-time three fundamental representation quarks are created, propagate in time at a fixed spacial separation (along world lines C_1, C_2, C_3), and later annhilate.

Fig. 9. Superposition of independent Coulomb fields of U(1) × U(1) gauge fields between three fundamental representation quark charges.

Fig. 10. Possible configurations for the collapse of Coulomb fields into strings due to vacuum monopoles.

Fig. 11. Cross sectional view of sheets of three abelian Wilson loops.

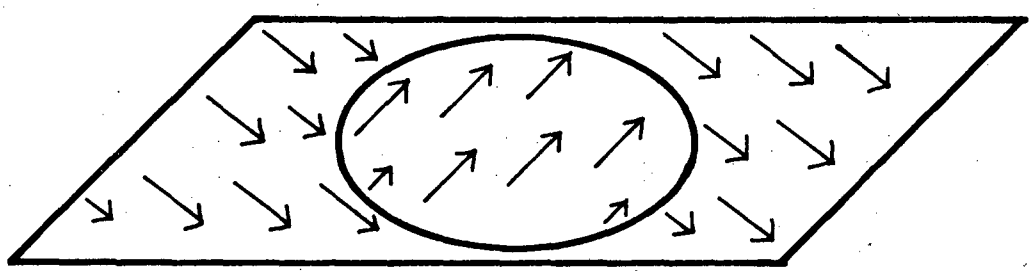

FIGURE 1

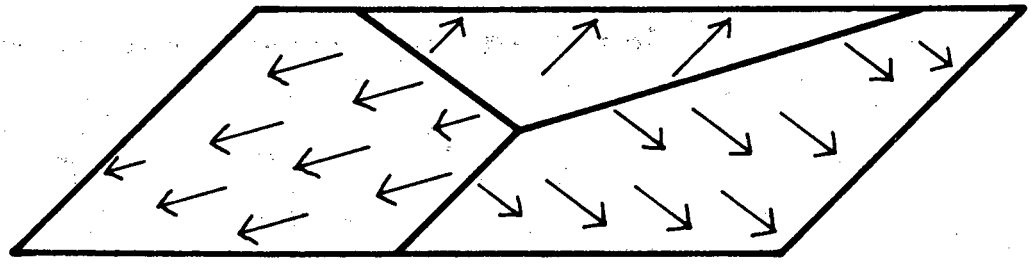

FIGURE 2

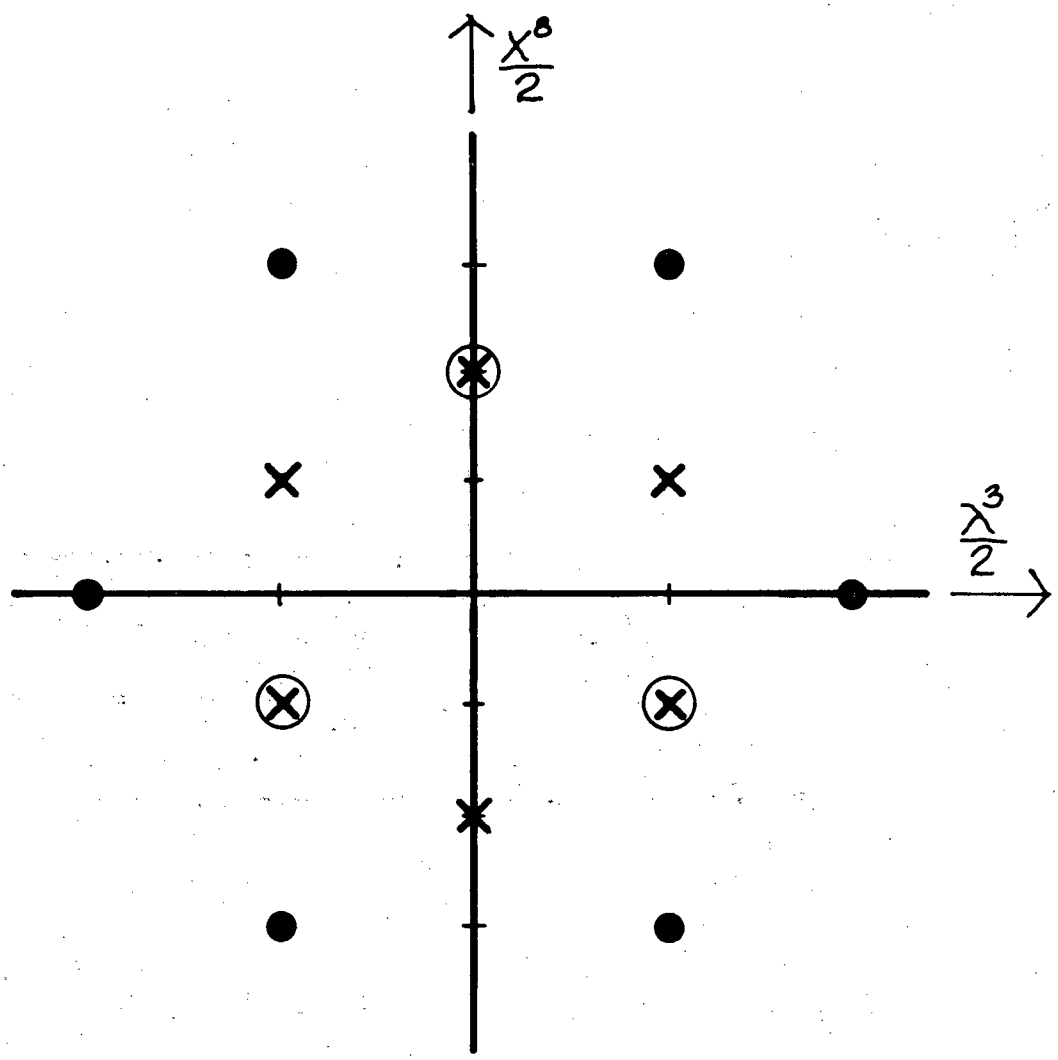

FIGURE 3

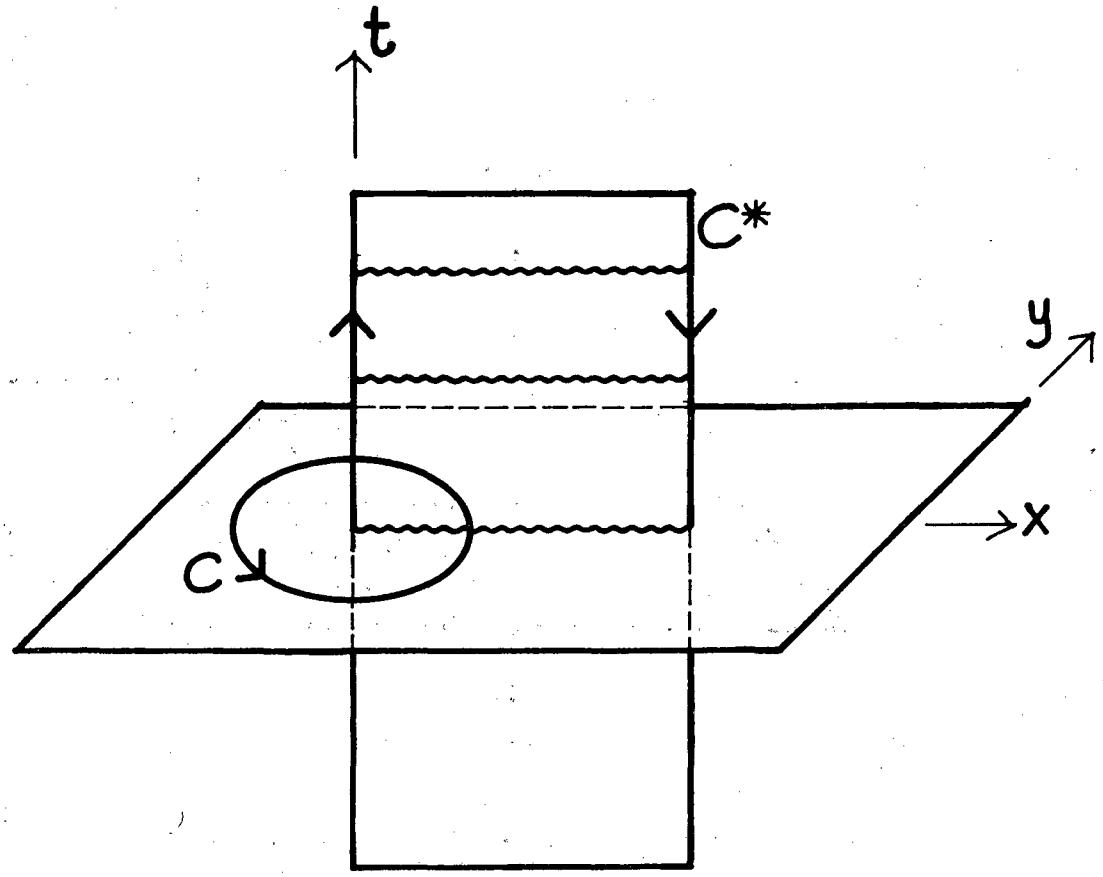

FIGURE 4

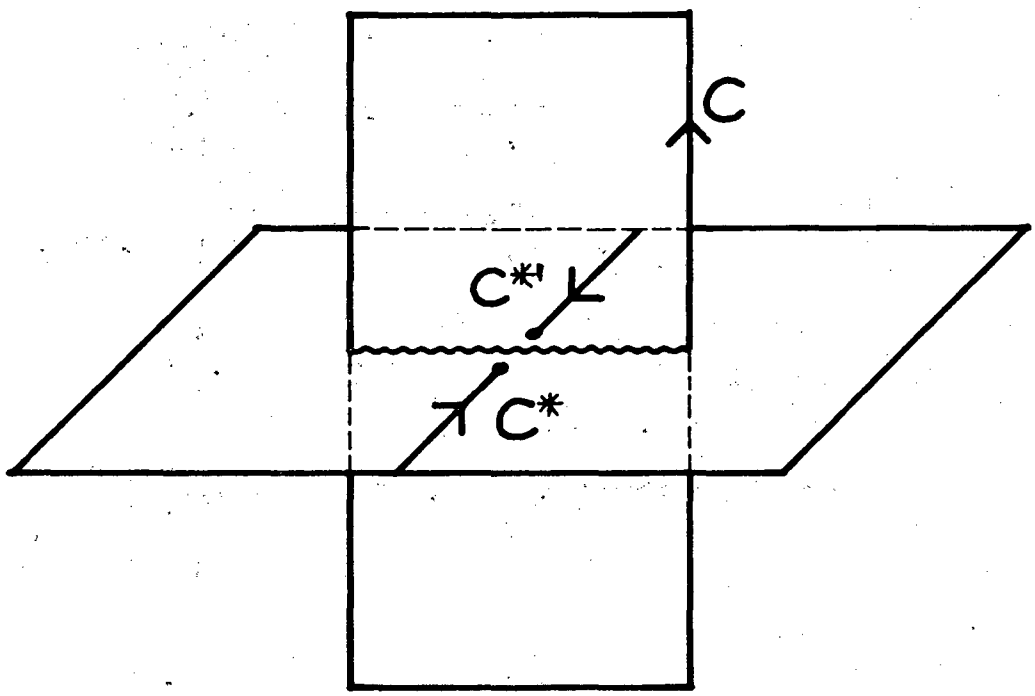

FIGURE 5

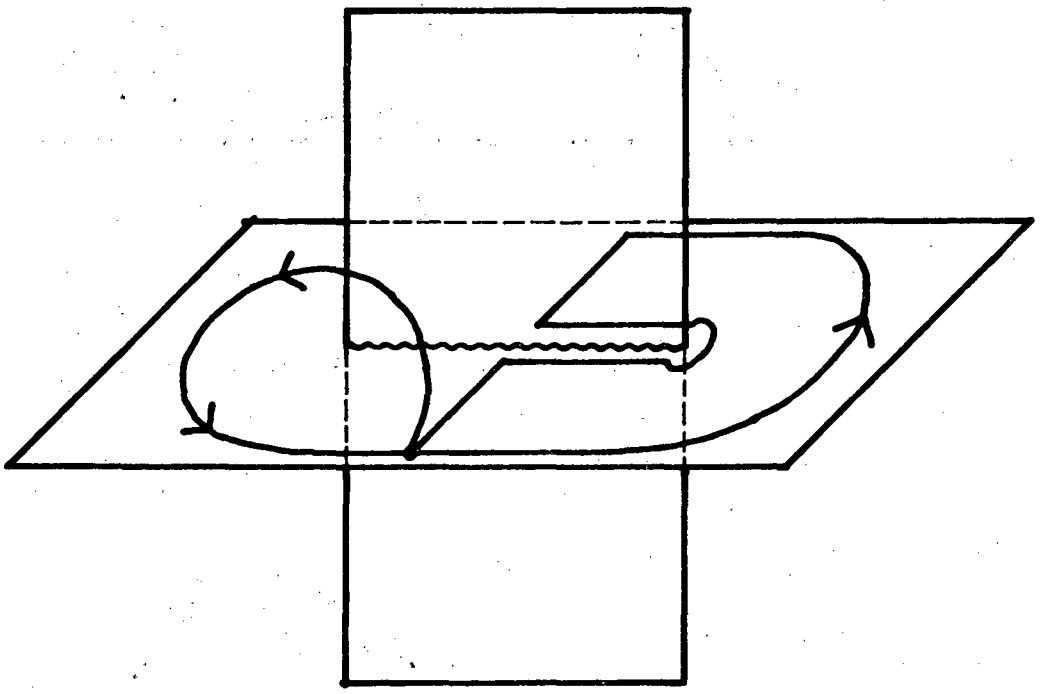

FIGURE 6

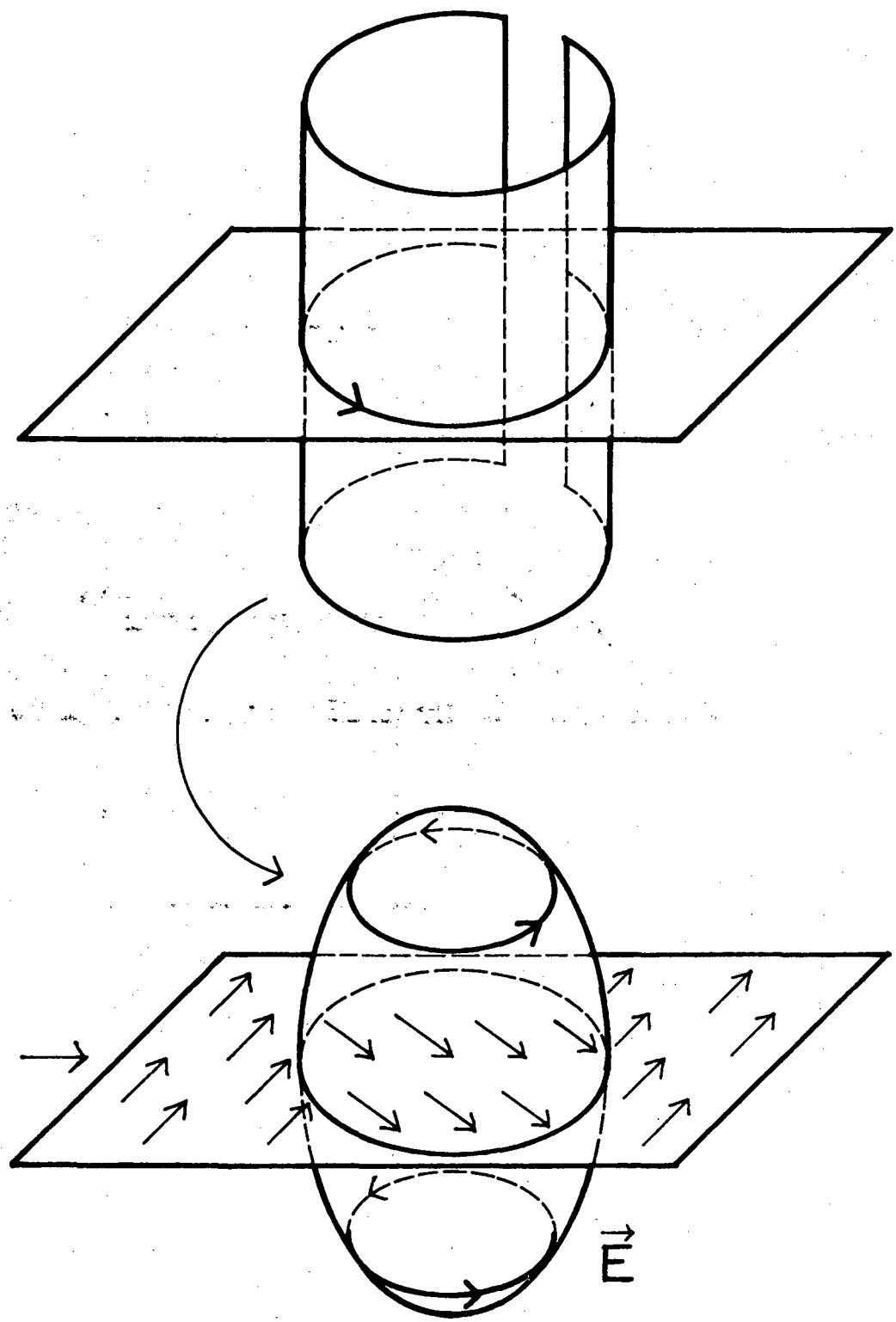

FIGURE 7

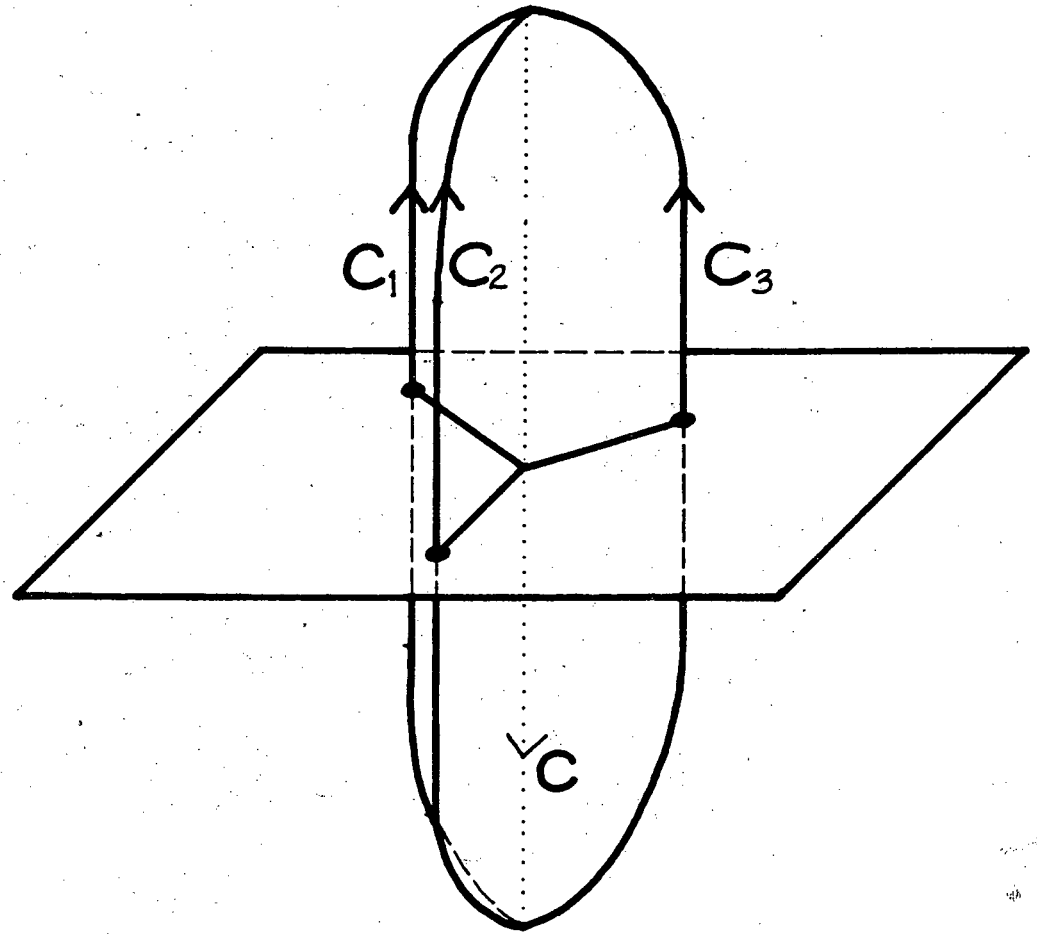

FIGURE 8

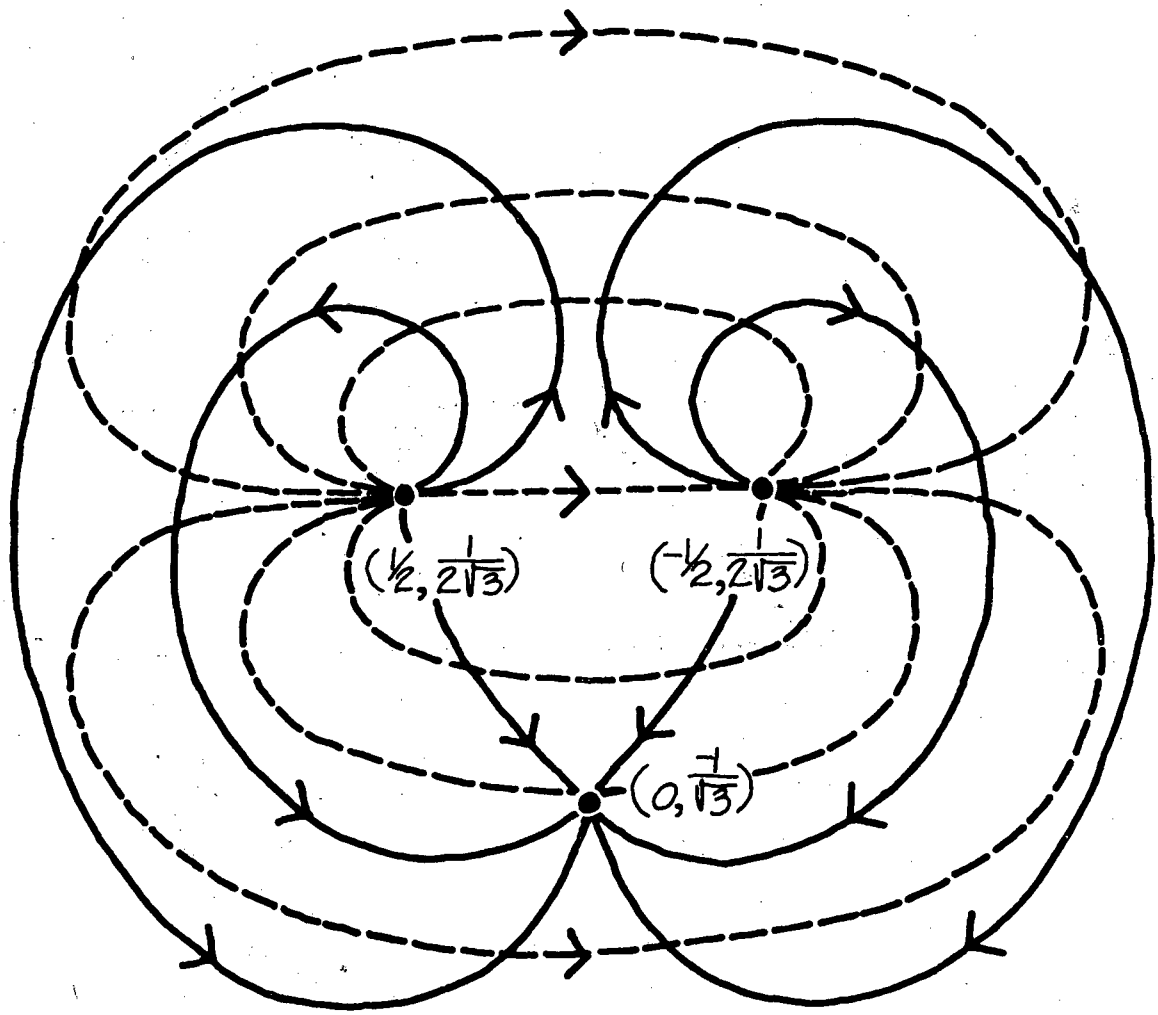

FIGURE 9

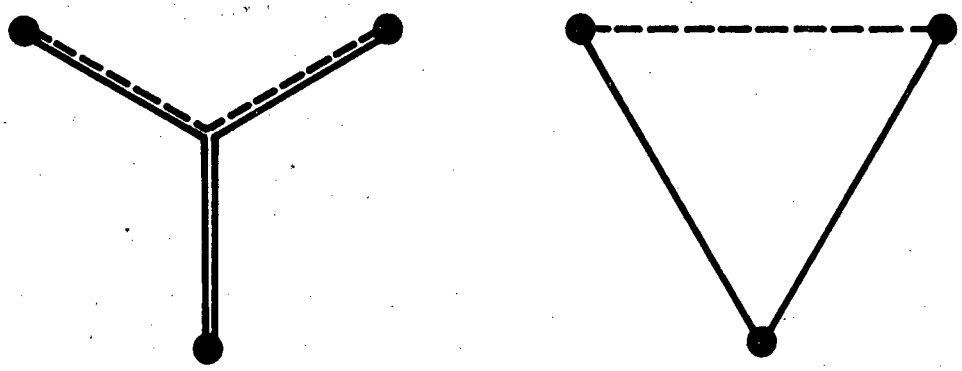

FIGURE 10

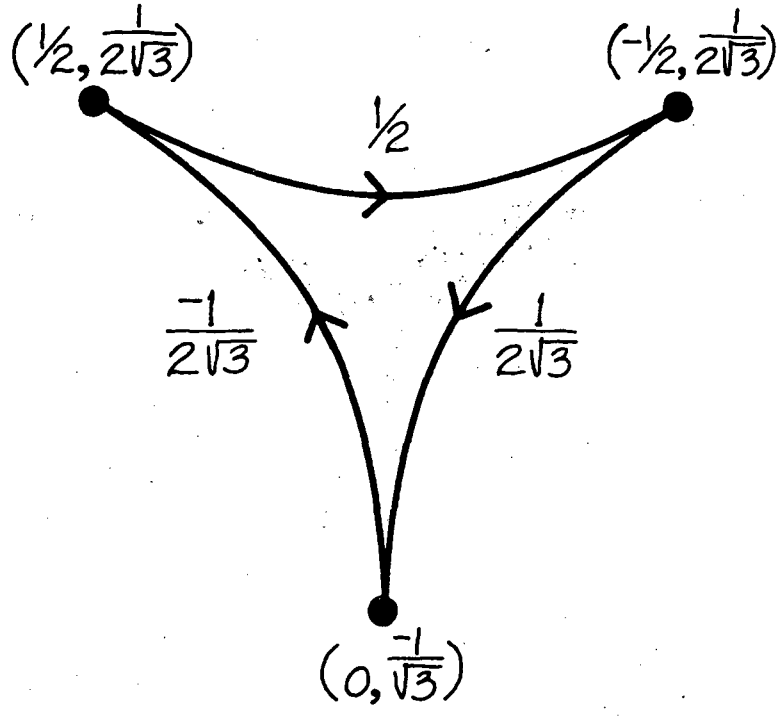
$(\frac{1}{2}, \frac{1}{2\sqrt{3}})$
$(-\frac{1}{2}, \frac{1}{2\sqrt{3}})$
$\frac{1}{2}$
$\frac{-1}{2\sqrt{3}}$
$\frac{1}{2\sqrt{3}}$
$(0, \frac{-1}{\sqrt{3}})$

FIGURE 11

This report was done with support from the Department of Energy. Any conclusions or opinions expressed in this report represent solely those of the author(s) and not necessarily those of The Regents of the University of California, the Lawrence Berkeley Laboratory or the Department of Energy.

Reference to a company or product name does not imply approval or recommendation of the product by the University of California or the U.S. Department of Energy to the exclusion of others that may be suitable.

TECHNICAL INFORMATION DEPARTMENT
LAWRENCE BERKELEY LABORATORY
UNIVERSITY OF CALIFORNIA
BERKELEY, CALIFORNIA 94720