Presented at the Particle Accelerator
Conference, San Francisco, Ca.
March 5-7, 1973

LBL-1504
c.1

LBL 184-INCH SYNCHROCYCLOTRON OPERATIONAL IMPROVEMENTS

L. R. Glasgow, L. L. Kanstein,
R. W. Sorensen, and J. T. Vale

March 1973

Prepared for the U.S. Atomic Energy
Commission under Contract W-7405-ENG-48

For Reference

Not to be taken from this room

LBL-1504
c.1

DISCLAIMER

This document was prepared as an account of work sponsored by the United States Government. While this document is believed to contain correct information, neither the United States Government nor any agency thereof, nor the Regents of the University of California, nor any of their employees, makes any warranty, express or implied, or assumes any legal responsibility for the accuracy, completeness, or usefulness of any information, apparatus, product, or process disclosed, or represents that its use would not infringe privately owned rights. Reference herein to any specific commercial product, process, or service by its trade name, trademark, manufacturer, or otherwise, does not necessarily constitute or imply its endorsement, recommendation, or favoring by the United States Government or any agency thereof, or the Regents of the University of California. The views and opinions of authors expressed herein do not necessarily state or reflect those of the United States Government or any agency thereof or the Regents of the University of California.

LBL 184-INCH SYNCHROCYCLOTRON OPERATIONAL IMPROVEMENTS*

L. R. Glasgow, L. L. Kanstein, R. W. Sorensen, and J. T. Vale
Lawrence Berkeley Laboratory
Berkeley, California 94720

Summary

This paper describes the 184-Inch Synchrocyclotron and some of the operational improvements incorporated into it in the last few years.

The proton beam intensity has been increased a factor of 2 by relatively simple and inexpensive means. A new beam-stretching "cee" electrode has been installed; this increases the internal stretched beam by about a factor of 2. Radiation shielding has been added which simplifies the building and modifying of experimental caves as well as providing radiation protection. The radiation monitoring system has been improved. Handling gear has been developed which eases the difficulties encountered in handling the great variety of equipment involved in cyclotron operation. An internal-external quadrupole beam focusing system is now being developed that will increase the external beam by 30%. A new patient-positioning unit (ISAH) has been installed in the medical cave and is the subject of a separate paper at this conference.

The 184-Inch Synchrocyclotron

This machine has been in operation for 26 years and has been modified several times in that period. The last major modification was completed in 1957. At that time the beam energy was increased by a factor of 2. In the early 1960's a beam-stretching "cee" electrode was added, the experimental area was increased, and the medical facility was improved. These improvements were reported in the proceedings of the 1964 Williamsburg Conference on High Energy Cyclotron Improvement in papers by Dr. K. M. Crowe and R. J. Burleigh. Since 1964 and up until the last few years, the improvements have been primarily in the acquisition of shielding, experimental magnets, power supplies, etc., in order to make fullest use of experimental facilities.

Operating Record

This machine has an excellent record of operation in both running time and low operating cost. Many thousands of experimental operating hours have been logged. The average innage rate for the last ten years has been greater than 93%. Innage is defined as follows:

$$\text{Innage} = \frac{\text{actual hours operated for experiments}}{\text{total available operating hours}} .$$

The total available operating hours is the crew duty time and includes maintenance, shutdown for repairs, installation of new equipment, modifications, etc.

Experimental Facilities

This machine is versatile in that it accelerates beams of four different particles:

Protons	740 MeV
Deuterons	460 MeV
Alpha particles	910 MeV
Helium-3 ions	1140 MeV .

All of these beams are extracted for external use. In addition, mesons are produced from an internal target and brought out to an external experimental cave. A neutron beam is also produced from an internal target and used externally. The external proton beam current is 0.1 μA.

Typically, five to seven experiments are set up at one time. Some may run simultaneously while others require the beam exclusively. This system gives versatility for both the experimenters and the cyclotron.

Proton Beam Intensity Increase

This improvement was initiated several years ago when a modification study for the 184-Inch Synchrocyclotron was undertaken. During discussions the comment was made that people at Orsay had gotten a significant increase in beam by introducing carbon tetrachloride into the ion source gas. There was a further comment that the ion source was destroyed in the process, which tended to be somewhat discouraging. In spite of the possible difficulties, the cyclotron operations people decided to experiment with this idea. In a few hours they devised a means of injecting the CCL_4 into the ion source. An increase of 50% in beam intensity was measured. The ion source showed no significant deterioration after many hours of operation. This technique is now established as a standard operating procedure. In order to take full advantage of the CCL_4 addition, it was necessary to increase the dee voltage. It was also necessary to operate at maximum beam conditions--there is no effect when operating at low beam conditions.

The following theory has been proposed to explain the observed beam increase: When CCL_4 is introduced into the ion source arc, large quantities of negative ions are created in the accelerating region. These ions are massive enough to remain for a significant period of time without being swept away. They neutralize the effect of space charge blowup and permit more protons to be captured and retained in the acceleration process. The CCL_4 is only effective when maximum proton beam is being accelerated. When CCL_4 is added to the alpha particle gas the beam is actually reduced. The deuteron beam remains relatively unaffected. This indicates that space charge blowup is not a limiting factor when accelerating low intensity protons or alpha and deuteron particles.

Chemicals other than CCL_4 were considered and one other was tried, sulphur hexafluoride. It had the necessary qualifications and, being a gas, it was simpler to introduce into the ion source. SF_6 worked, but was not noticeably better than CCL_4. After a few weeks of use there were indications of corrosive action and severe sparking from dee to ground began to occur. SF_6 was discontinued and CCL_4 use was resumed.

A further increase of 50% in proton beam intensity was achieved by removing the negative bias of 1800 volts from the main dee just prior to the start of the acceleration period. The function of the negative dee bias voltage is to clear out electrons and negative ions from the accelerating region. This prevents multipactoring from occurring when the main dee RF voltage is turned on. The dee bias also tends to clear out the negative CCL_4 ions which are needed to neutralize

*Work performed under the auspices of the U. S. Atomic Energy Commission.

the space charge blowup of the proton beam. Therefore the dee bias is removed after the main dee RF voltage is up to maximum and before the ion source arc is pulsed. The dee bias is kept off until the beam is completely stretched, because it is subject to the space charge blowup effect during the stretching period. The sequence of events is shown schematically in Fig. 1.

The cost of the change was negligible and was completed without any interruption in the operating schedule. It was done entirely by the operations group under the guidance of J. T. Vale.

Beam-Stretching "Cee"

This beam-stretching "cee" was installed in January 1973; it replaced an older "cee" that was installed in 1961. The old "cee" was described in a paper by Dr. K. M. Crowe at the 1964 Williamsburg Conference on High Energy Cyclotron Improvement. The new "cee" is similar to the model described in a paper by K. MacKenzie at the International Cyclotron Conference, Oxford, England, in September 1969. As installed, the power amplifier covers the proton and alpha particle frequency ranges. Range-changing is done with a large switch which changes three inductances as described in Fig. 6 of the Oxford report.

When operating in the proton range a bandwidth of only 0.6 MHz is required for any given operating condition. To cover all operating conditions the bandwidth can be adjusted to any part of the 19.0 to 20.2 MHz range by tuning the anode and "cee" capacitors from the control room. In the alpha range the required bandwidth of 0.3 MHz can be adjusted to any part of the total range of 13.75 to 14.4 MHz with the same controls. Using these narrower bandwidths within the total frequency ranges reduces the current and power requirements (as shown in Figs. 7 and 8 of the Oxford report) and permits the use of the old "cee" power supply. A large, high perviance RCA 4648 tetrode is used as the amplifier and allows the old "cee" RF grid driver to be utilized. The RF voltage on the new "cee" is five times greater than the old one. This enables the newer device to stretch about 100% of the internal beam as opposed to 50% for the previous "cee." This improvement provides a factor of 2 gain in the meson beam which is produced by the internal proton beam striking a target. Unfortunately, the external beam does not gain the same factor because of restrictions in the regenerative extraction system. There is no apparent gain in external stretched beam with the new "cee." The operation of the "cee" relative to the main dee and RF cycle is described in Fig. 1. The location relative to other components is shown in Fig. 2.

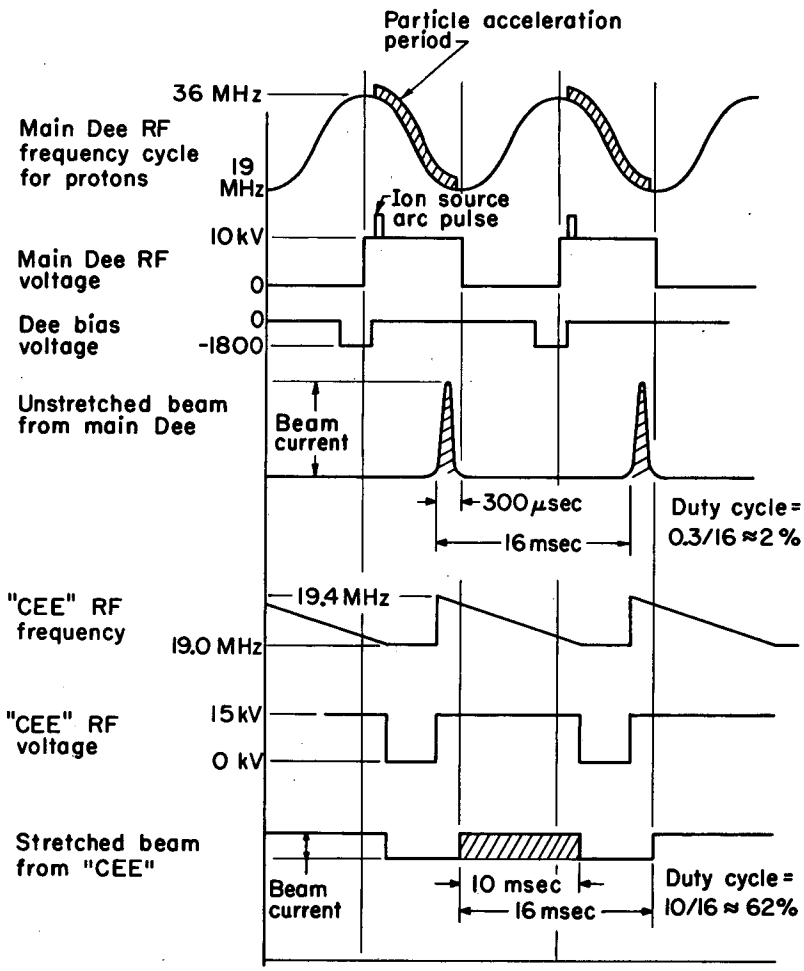

Fig. 1. Timing Sequence of Main Dee and "Cee"

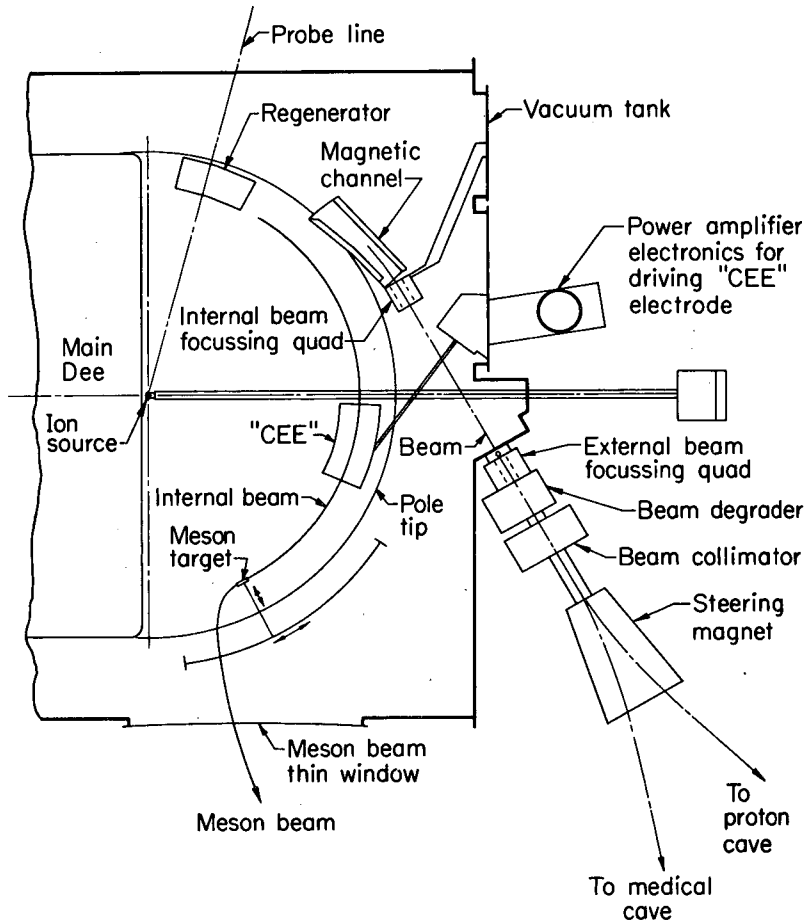

Fig. 2. Cyclotron Beam Component Arrangement

Radiation Shielding

Additional radiation shielding has been acquired to provide the required protection for personnel and to make maximum use of the experimental area. Much of the newer shielding is constructed of high density materials because of the need to conserve floor space and the desire to keep beam path lengths short. The shielding materials are ferrophosphorous aggregate (used in making 300 lb/ft^3 concrete), magnetite aggregate (225 lb/ft^3 concrete), ordinary concrete (150 lb/ft^3), cast iron (435 lb/ft^3) obtained as surplus submarine net anchor blocks, and steel (490 lb/ft^3). These materials were used individually or in combinations.

The newer shielding is constructed in simple geometric forms. A modular system is employed so that all blocks are a fractional part or multiple of a standard module. Many blocks are built with lifting points that permit them to be rocked onto and picked up from any face. All of these features are designed to promote maximum flexibility and interchangeability. This shielding has been proven in service and has helped to keep costs down in experimental cave construction. At times it has made possible modifications that would otherwise have been impractical.

Radiation Monitoring

The increased beam intensity has been a boon for experimenters, but it is a slight curse for operations people. The increased radiation levels complicate operating procedures. The higher level of induced radioactivity in and around the cyclotron makes maintenance and changes more difficult than previously.

The neutron radiation monitoring system has been improved to make possible a constant check on radiation levels all over the building with a glance at a panel in the control room. This panel monitors counters that are placed in strategic areas around the building. The location of the neutron counters is noted on maps in the control room and in a room nearer the cyclotron where the electronics for the system is located. In addition to meters in front of the operators, the radiation level from each neutron counter is continuously recorded and presented at another panel in the control room.

This system permits a quick check of radiation levels whenever a change is made in any of the experimental caves.

Handling Equipment

In order to cope with the great variety of handling problems encountered in this type of operation, it has been necessary to design handling equipment that is as universal as possible. Our handling equipment and shielding system were designed to complement each other. The equipment consists of a variety of adjustable spreader-type lifting fixtures and a system of one-bolt lifting blocks. This combination makes it probable that we can simply and safely handle almost anything within our 30-ton crane capacity. Two drawings have been made showing each fixture and its capabilities. A glance at these drawings makes it relatively easy to put together the right combination for any par-

ticular job. The equipment has been given a rather thorough test and, though admittedly not perfect, does suffice for a majority of our handling problems. Perhaps the most important thing necessary to make a system like this work well is the close cooperation of the people involved in using it. We have been most fortunate in this respect.

Internal-External Quadrupole Beam Focusing System

This project was initiated about a year ago when it was suggested during a discussion that a quadrupole placed at the exit of the beam extraction system magnetic channel would increase the external beam. Beam photographs taken at the channel exit showed that the beam was "blowing up" vertically, but was fairly well focused horizontally. Theoretical studies by A. C. Paul of LBL showed that the best results would be obtained by placing a vertically focusing quad at the magnetic channel exit and a horizontally focusing quad further downstream. This is necessary in order to compensate for the horizontal defocusing caused by the vertical quad. With the above combination an increase of 25 to 35% in external beam is predicted. Both quads must produce a gradient of 2.5 kG/in. over an effective length of 10 in.

Layout work and calculations show that it is possible to get the ampere turns necessary to produce the required field in the limited space available. It is planned to use the quads to provide a small amount of beam steering as well as focusing.

The quads are being designed as ironless Septier-type square aperture magnets. They are ironless primarily because of space restrictions. The internal quad will be inside the main vacuum tank and will have a 6 in. square aperture and be 12 in. long. The external quad will be outside the vacuum system and will have an 8 in. square aperture and be approximately 10 in. long. Because of space limitations it is necessary to run the magnets at high current density ($\approx 30,000$ A/in.^{2}) and use higher than normal water pressure to obtain necessary cooling.

Funds have been allotted for this improvement. The internal quad is in the final design stage, and the external quad is about midstage in design. It is anticipated that the magnets will be installed in a few months. Figure 2 shows the relative positions of the quads with respect to other parts of the cyclotron.

LEGAL NOTICE

This report was prepared as an account of work sponsored by the United States Government. Neither the United States nor the United States Atomic Energy Commission, nor any of their employees, nor any of their contractors, subcontractors, or their employees, makes any warranty, express or implied, or assumes any legal liability or responsibility for the accuracy, completeness or usefulness of any information, apparatus, product or process disclosed, or represents that its use would not infringe privately owned rights.

TECHNICAL INFORMATION DIVISION
LAWRENCE BERKELEY LABORATORY
UNIVERSITY OF CALIFORNIA
BERKELEY, CALIFORNIA 94720