LBL-15113
c.2

Lawrence Berkeley Laboratory
UNIVERSITY OF CALIFORNIA

RECEIVED
LAWRENCE
BERKELEY LABORATORY
JUN 8 1983
LIBRARY AND
DOCUMENTS SECTION

Accelerator & Fusion Research Division

Presented at the Particle Accelerator Conference
on Accelerator, Engineering and Technology,
Sweeney Convention Center, Santa Fe, NM,
March 21-23, 1983

PERFORMANCE OF THE NEW CRYOGENIC VACUUM SYSTEM AT THE BEVATRON

R.T. Avery, T.F. Henderson, K.D. Kennedy,
J.R. Meneghetti, and J.R. Alonso

March 1983

TWO-WEEK LOAN COPY
This is a Library Circulating Copy
which may be borrowed for two weeks.
For a personal retention copy, call
Tech. Info. Division, Ext. 6782.

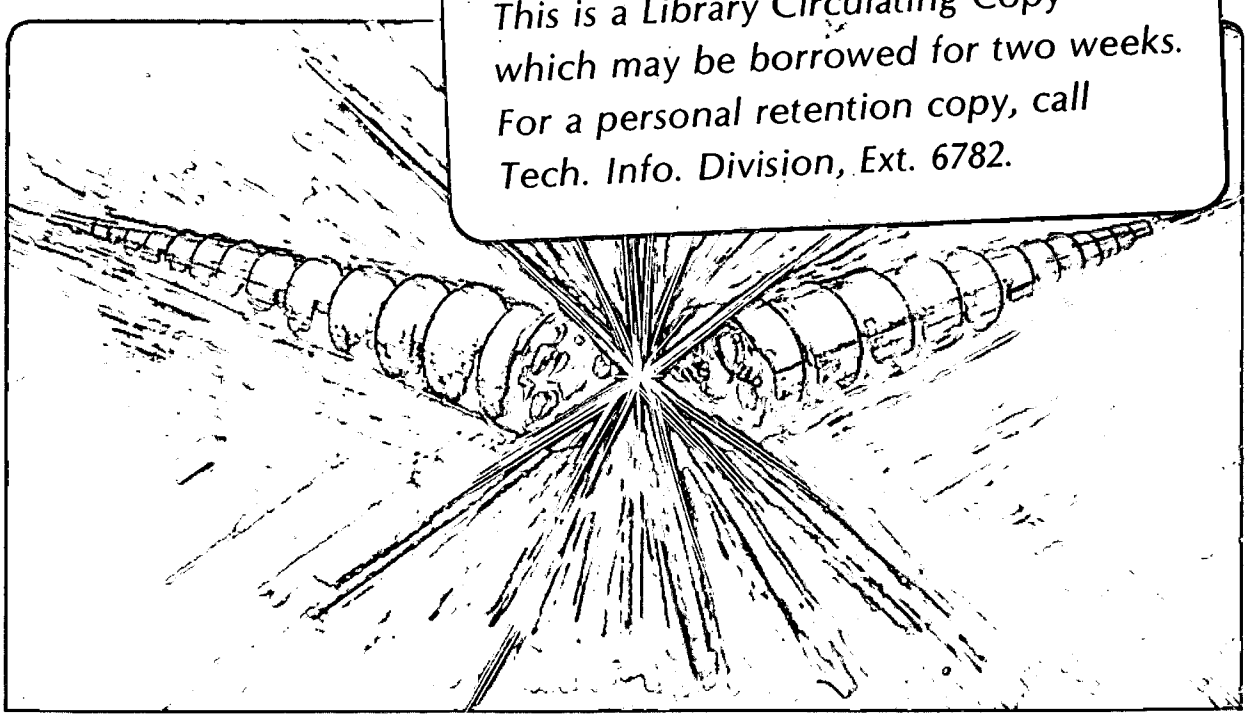

Prepared for the U.S. Department of Energy under Contract DE-AC03-76SF00098

LBL-15113

DISCLAIMER

This document was prepared as an account of work sponsored by the United States Government. While this document is believed to contain correct information, neither the United States Government nor any agency thereof, nor the Regents of the University of California, nor any of their employees, makes any warranty, express or implied, or assumes any legal responsibility for the accuracy, completeness, or usefulness of any information, apparatus, product, or process disclosed, or represents that its use would not infringe privately owned rights. Reference herein to any specific commercial product, process, or service by its trade name, trademark, manufacturer, or otherwise, does not necessarily constitute or imply its endorsement, recommendation, or favoring by the United States Government or any agency thereof, or the Regents of the University of California. The views and opinions of authors expressed herein do not necessarily state or reflect those of the United States Government or any agency thereof or the Regents of the University of California.

LBL-15113

PERFORMANCE OF THE NEW CRYOGENIC VACUUM SYSTEM AT THE BEVATRON*

R.T. Avery, T.F. Henderson, K.D. Kennedy, J.R. Meneghetti, and J.R. Alonso

Lawrence Berkeley Laboratory
University of California
Berkeley, California 94720

March 1983

*This work supported by U.S. Department of Energy, High Energy and Nuclear Physics, Div. of Nuclear Physics, under contract DE-AC03-76SF00098.

PERFORMANCE OF THE NEW CRYOGENIC VACUUM SYSTEM AT THE BEVATRON*

R.T. Avery, T.F. Henderson, K.D. Kennedy, J.R. Meneghetti, and J.R. Alonso
Lawrence Berkeley Laboratory, University of California
Berkeley, California 94720

Summary

A cryogenically cooled liner has been installed within the Bevatron to achieve 10^{-10} Torr vacuum. Features and performance of this liner are described including achieved pressures, residual gas composition, cryo heat loads, leak rates through moving and static seals, and cool-down and warm-up times.

Configuration

The Bevatron Vacuum Improvement Project was under taken to achieve a vacuum in the 10^{-10} Torr range in the Bevatron so that high-intensity beams of very heavy ions (up through uranium) could be accelerated by the Bevatron with minimal loss due to residual gas interactions. The vacuum chamber of the Bevatron, within which the ion beams circulate, has beem completely lined with a cryogenic liner cooled to $\leq$ 12°K for 85 % of the circumference (Fig. 1 and 2) with the remainder of the circumference at ~80°K. A vacuum of ~10^{-6} Torr outside of the liner results in no differential pressure applied to the liner. This liner has been described in an earlier paper[1] and more extensively in the final report for the project[2]. A few of the special features are described hereafter.

Three extraction magnets had to be located within the liner. The M1 septum magnet was enclosed in a stainless steel "can" except for the 3mm thick 14 turn septum at ~300°K which is directly exposed to the ultra-vacuum. The M2 magnet with its thicker septum, was completely encased in a stainless steel "can". The magnets operate at ~300°K but the "cans" are a few 10°K cooler by radiation to the surrounding 80°K liner. These "warm" magnets account for a significant part of the residual gas load. These magnets "plunge" for each extraction cycle, requiring special shaft cryo-seals as described below.

The P1 perturb/spill magnet has rapid field changes (10 in 1 ms) just prior to extraction which dictate use of laminated transformer steel and prevent use of a "can". The magnet weighs ~4000 pounds and has >7000 square feet of lamination surface area exposed to the ultra-vacuum. The vacuum criteria was satisfied by cooling the entire magnet to ~80°K by flowing liquid nitrogen through the hollow copper conductors of the several separate coils and by radiation from the steel core to the surroundings at 80°K. This magnet has a shaft cryo-seal which is moved infrequently.

The M1 and M2 septum magnets are supported on 12-inch diameter shafts which penetrate through the liner wall and are sealed by the cryo-seal shown in Fig. 3. The seal has a nominal radial clearance of 1.7 mm, so a small amount of gas can pass directly from the 10^{-6} Torr region through this radial clearance. However, most of the gas entering the seal strikes one of the 80°K chevrons and is pumped there or at the adjacent 12°K surface. In normal operation, the radial clearance will accommodate shaft misalignment during its 0.53 m stroke. However, Teflon rub surfaces can laterally displace the seal assembly if the shaft should touch it, for example during cooldown.

Large components (e.g. the magnets previously discussed) are located within the 80°K liners. Originally, it was planned that the large opening for installing these components would be closed by welding. Instead, the static cryo-seal shown in Figure 4 was used. Gas molecules entering the seal strike 80°K and 12°K surfaces on which almost all are pumped. This large "hatch" permits removal of components for major service.

Almost all gas molecules travelling from the SuperHILAC beamline (~10^{-5} Torr) toward the Bevatron are pumped on the walls of a 12°K section of pipe at the Bevatron extrance. For the Bevatron exit beamline (~10^{-6} Torr), the 12°K liner effectively pumps almost all entering molecules before they can get to the beam circulation region. Thus, isolation foils at the Bevatron entrance and exit have been avoided.

Cryogenic Performance

The 80°K surfaces are cooled by liquid nitrogen circuits while the "12°K" surfaces are cooled by gaseous helium refrigerated by four CTI 1400 series expanders each fed by two compressors. A typical cooldown cycle is shown in Figure 5 with the second compressors being used below ~100°K.

During steady-state operation, the total "12°K" heat load is ~150 watts which is easily handled by two of the four expanders with each fed by only one compressor, leaving the other expanders and compressors as spares. In this mode, the supply and return temperatures are 8° and 10°K respectively.

When the Bevatron is to be opened, the cryo systems are turned off and the vacuum is spoiled by dry nitrogen to ~1 Torr to negate the insulating properties of the superinsulation. The cryo liner reaches 273°K within 24 hours, except for the P1 magnet which takes several days. The Bevatron is vented to dry air within 16 hours of vacuum spoiling.

Vacuum Performance

A typical vacuum pumpdown cycle is shown in Figure 5. The Bevatron is first evacuated by mechanical pumps to 1 Torr in < 1 hour. Then, in a fraction of an hour a large cryoroughing pump reduces the pressure to below 10^{-3} Torr. When helium refrigeration drops the temperature below 24°K, the pressure quickly drops to ~10^{-9} Torr.

Ion gauges were installed to read the pressure in the North, East and South tangent regions (80°K) and, at steady state, typically read 1×10^{-9}, 8×10^{-10}, and 5×10^{-10} Torr respectively. The balance of the Bevatron circumference operates at ~10°K and, if the pressure in these 10°K regions is negligible, then an azimuthally averaged pressure of 1.2×10^{-10} Torr is inferred.

The azimuthally averaged pressure in the Bevatron has also been estimated by survival of ion beams. $^{12}C^{4+}$ ions were injected into the Bevatron and held at an energy of 7.2 MeV/amu. These ions inter-

*This work supported by U.S. Department of Energy, High Energy and Nuclear Physics, Div. of Nuclear Physics, under contract DE-AC03-76SF00098.

act readily with the residual gas so as to lose one or two of the remaining electrons and spiral into the vacuum chamber wall. A half-life of 0.64 s was obtained under these conditions which, based on earlier loss measurements conducted at the SuperHILAC, infers an azimuthally averaged pressure of 6.8 x 10^{-10} Torr. This is an upper-bound estimate since some of the beam loss can be due to causes other than gas interactions. Thus, the ion gauge and ion beam pressure measurements are in fair agreement and indicate an average pressure in the mid to low 10^{-10} Torr range.

A residual gas analyzer in the East tangent region (80°K) indicates that the residual gas is primarily H_2 and CO with small amounts of O_2 and CO_2.

Ion Beam Performance

Ion beams were accelerated in the new system in February 1982 leading to the acceleration of uranium ions in May 1982. Tuning for the heaviest ions has been facilitated by first accelerating a tracer ion of similar charge to mass ratio (e.g. $^{56}Fe^{16+}$ for $^{238}U^{68+}$) and later accelerating the heavier ion with only minor tuning. The tracer ions are even more sensitive to residual gas than are their heavier counterparts and fortunately there have been negligible losses for the tracers as well as the heavier ions, including uranium.

Bonuses of Cryo Vacuum System

The cryo vacuum system has proven exceedingly tolerant and has not required the extreme care that is characteristic of most 10^{-10} Torr vacuum systems. Some of the surface areas exposed to the vacuum are: (a) 7 x 10^4 square meters of mylar superinsulation, (b) 650 square meters of printed-circuit boards, (c) 400 square meters of polyester glass plastic, (d) conductive paint, (d) 650 square meters of magnet laminations.

Parts were given only a wipe-down cleaning similar to that for 10^{-5} Torr systems. Fingerprints (and even footprints) could be tolerated. The system can be left open to atmosphere for long periods. No bake-out is required. During power outages, the "12°K" surfaces remain cryopumping (<24°K) for at least six hours, with no significant degradation of vacuum.

However, care must be exercised to avoid excessive heat leakage to "12°K" components. Penetrations and joints in the superinsulation were carefully interleaved. The low heat load (150 watts) attests to the careful fabrication and installation of the superinsulation.

Summary/Conclusions

Vacuum in the 10^{-10} Torr range was achieved and very heavy ions, including uranium, have been accelerated for experimental use, thereby indicating the project's success. It is doubtful that the required vacuum could have been achieved on a practical basis by any means other than large-scale cryopumping.

Acknowledgements

The authors gratefully acknowledge the dedicated efforts of the very many people (scientists, engineers, designers, technicians, craftspeople, operating crew and others) who contributed to the success of this project and regret that space does not permit acknowledging them individually.

References

1. R. Avery, et. al, "Improving the Bevatron Vacuum to 10^{-10} Torr", IEEE Trans, Nucl. Sci. NS-28, No. 3 (1981), p. 3260.

2. Report LBL-14881 (UC-28), "High Intensity Uranium Beams From the SuperHILAC and the Bevatron: Final Report", by the Bevalac Staff, Accel. and Fus. Res. Div., L.B.L. (March 1982).

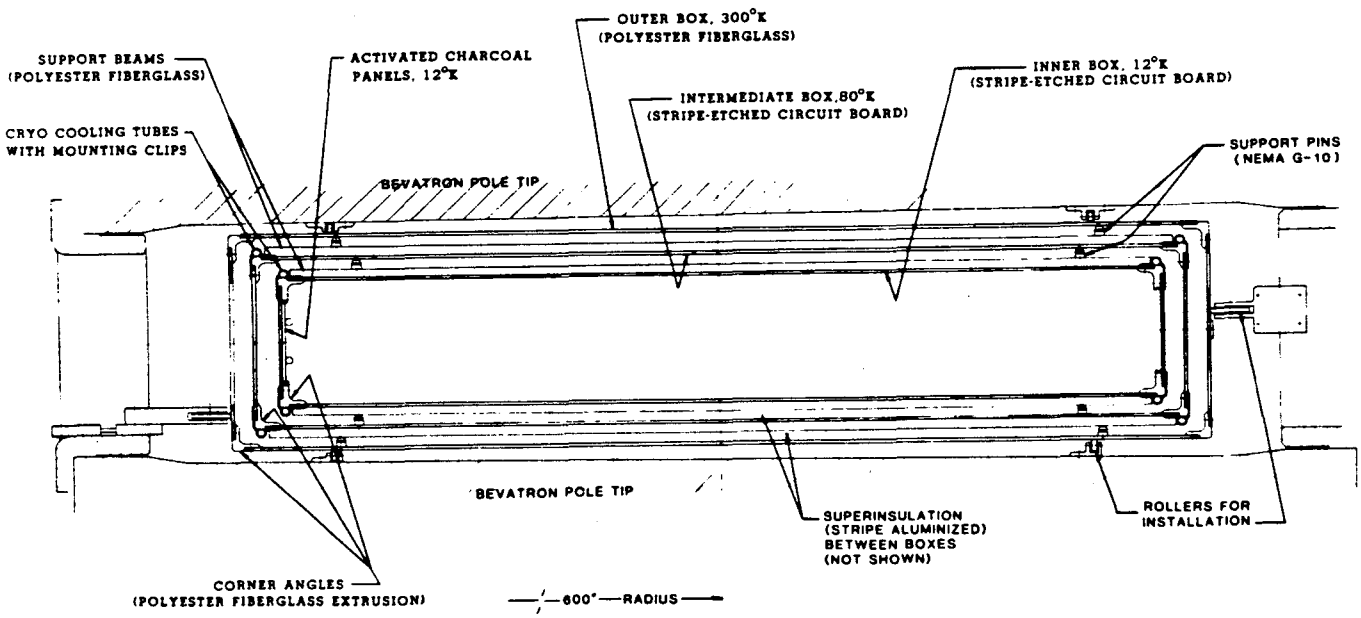

XBL 828-10996

Figure 1. Cross-section of new quadrant liner installed between Bevatron poletips.

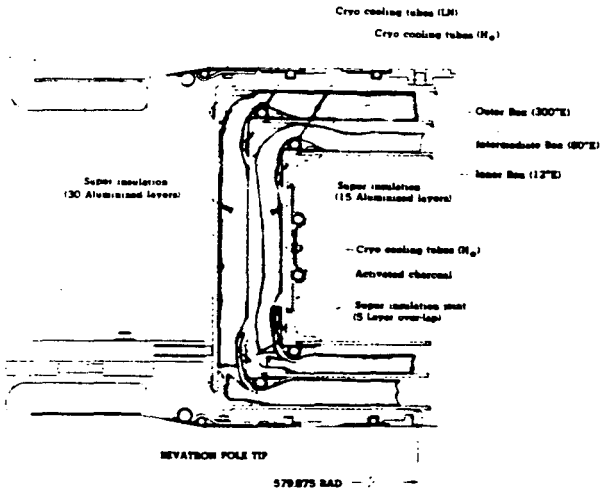

Figure 2. Enlarged cross-section of a portion of the new quadrant liner.

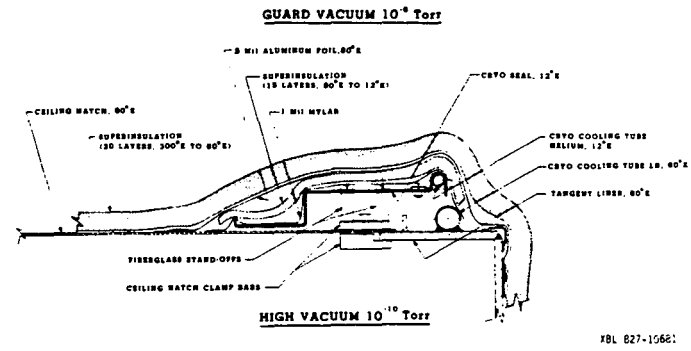

Figure 4. Cross-section of cryogenic seal for ceiling hatch in East and South tangent liners.

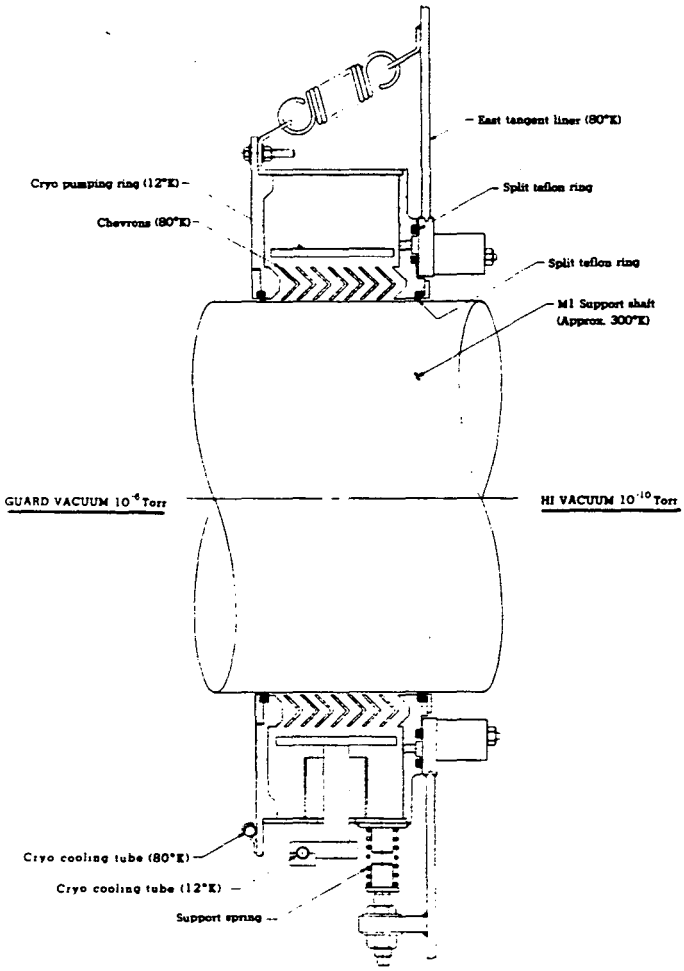

Figure 3. Cryogenic seal for the M1 septum magnet support shaft (12-inch dia.). Seal for M2 shaft is similar.

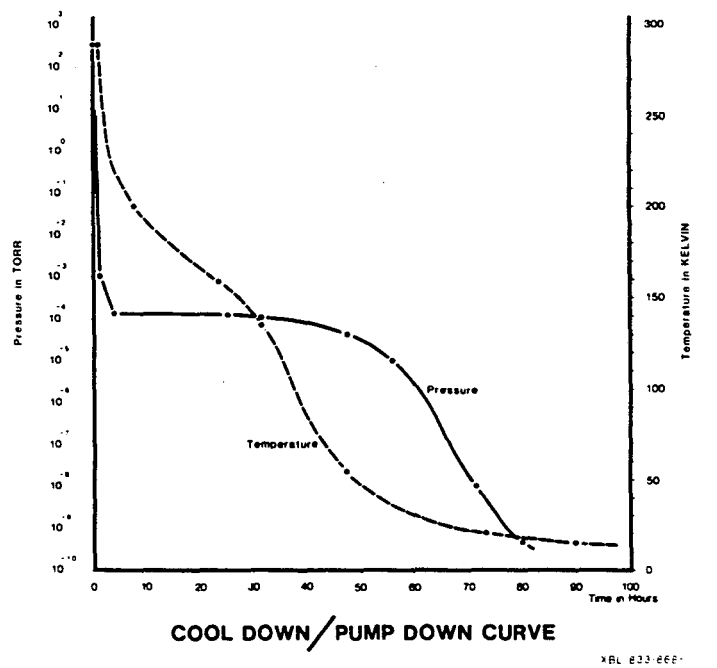

Figure 5. Graph of typical pumpdown cycle showing azimuthally-averaged pressure within the liner (by ion gauge) and the average of helium supply and return temperatures.

This report was done with support from the Department of Energy. Any conclusions or opinions expressed in this report represent solely those of the author(s) and not necessarily those of The Regents of the University of California, the Lawrence Berkeley Laboratory or the Department of Energy.

Reference to a company or product name does not imply approval or recommendation of the product by the University of California or the U.S. Department of Energy to the exclusion of others that may be suitable.

TECHNICAL INFORMATION DEPARTMENT
LAWRENCE BERKELEY LABORATORY
UNIVERSITY OF CALIFORNIA
BERKELEY, CALIFORNIA 94720