LBL-15115

Lawrence Berkeley Laboratory
UNIVERSITY OF CALIFORNIA

RECEIVED
LAWRENCE
BERKELEY LABORATORY

JUN 8 1983

LIBRARY AND
DOCUMENTS SECTION

Accelerator & Fusion Research Division

Presented at the Particle Accelerator Conference
on Accelerator, Engineering and Technology,
Sweeney Convention Center, Santa Fe, NM,
March 21-23, 1983

THE BEAM LINE VI REC-STEEL HYBRID WIGGLER FOR SSRL

E. Hoyer, T. Chan, J.W.G. Chin, K. Halbach, K.J. Kim,
H. Winick, and J. Yang

March 1983

TWO-WEEK LOAN COPY

This is a Library Circulating Copy
which may be borrowed for two weeks.
For a personal retention copy, call
Tech. Info. Division, Ext. 6782.

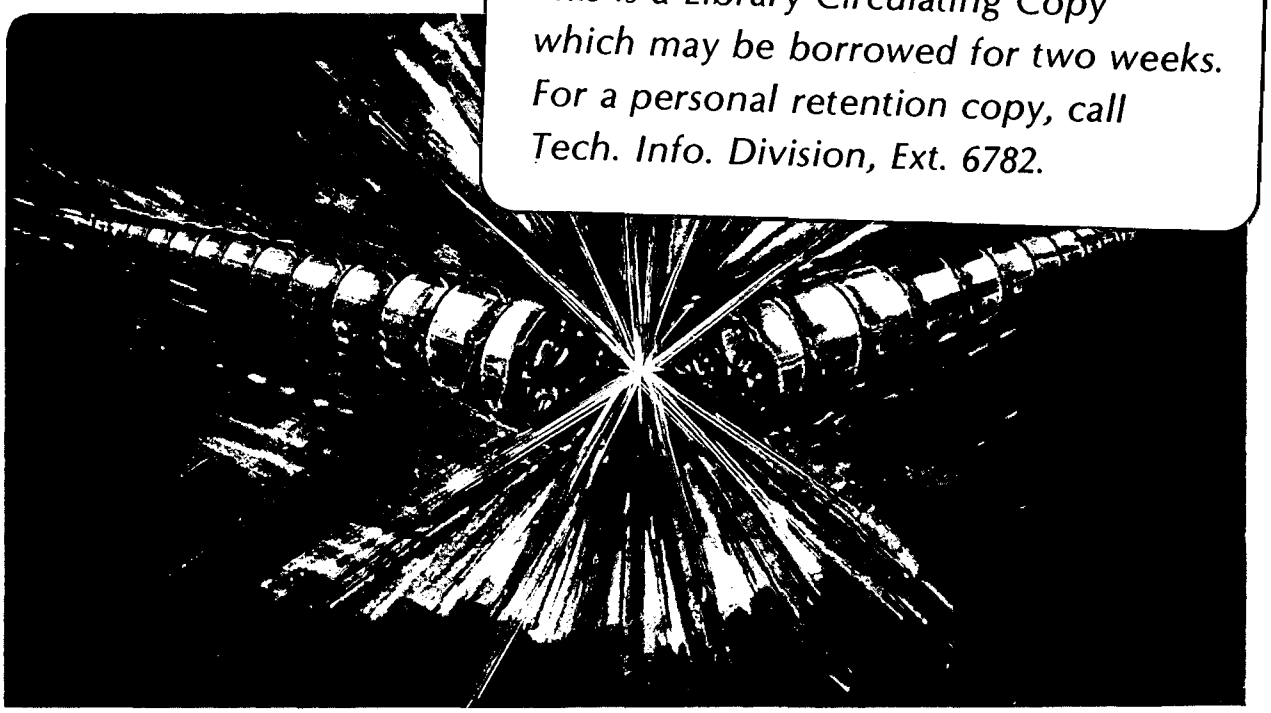

LBL-15115 c.2

Prepared for the U.S. Department of Energy under Contract DE-AC03-76SF00098

DISCLAIMER

This document was prepared as an account of work sponsored by the United States Government. While this document is believed to contain correct information, neither the United States Government nor any agency thereof, nor the Regents of the University of California, nor any of their employees, makes any warranty, express or implied, or assumes any legal responsibility for the accuracy, completeness, or usefulness of any information, apparatus, product, or process disclosed, or represents that its use would not infringe privately owned rights. Reference herein to any specific commercial product, process, or service by its trade name, trademark, manufacturer, or otherwise, does not necessarily constitute or imply its endorsement, recommendation, or favoring by the United States Government or any agency thereof, or the Regents of the University of California. The views and opinions of authors expressed herein do not necessarily state or reflect those of the United States Government or any agency thereof or the Regents of the University of California.

LBL-15115

THE BEAM LINE VI REC-STEEL HYBRID WIGGLER FOR SSRL*†

E. Hoyer, T. Chan, J.W.G. Chin, K. Halbach, and K.J. Kim

Lawrence Berkeley Laboratory
University of California
Berkeley, California 94720

H. Winick and J. Yang

Stanford Synchrotron Radiation Laboratory
Stanford University
Palo Alto, California 94025

March 1983

*Work supported by Office of Energy Research, DOE Contract No's DE-AC03-76SF00098, and †DE-AC03-82ER13000, †NSF Contact No. DMR81-12343, †NIH Grant 5 P41 RR01209.

THE BEAM LINE VI REC-STEEL HYBRID WIGGLER FOR SSRL*

E. Hoyer, T. Chan, J.W.G. Chin, K. Halbach, K.J. Kim*
Lawrence Berkeley Laboratory
University of California
Berkeley, California 94720

H. Winick, J. Yang+
Stanford Synchrotron Radiation Laboratory
Stanford University
Palo Alto, California 94025

Summary

A wiggler magnet with 27 periods, each 7 cm long which reaches 1.21 T at a 1.2 cm gap and 1.64 T at 0.8 cm gap has been designed and is in fabrication. Installation in SPEAR is scheduled for mid 1983. This new wiggler will be the radiation source for a new high intensity synchrotron radiation beam line at SSRL.

The magnet utilizes rare-earth cobalt (REC) material and steel in a hybrid configuration to achieve simultaneously a high magnetic field with a short period. The magnet is external to a thin walled variable gap stainless steel vacuum chamber which is opened to provide beam aperture of 1.8 cm gap at injection and then closed to a smaller aperture (< 1.0 cm). Five independent drive systems are provided to adjust the magnet and chamber gaps and alignment.

Magnetic design, construction details and magnetic measurements are presented.

Introduction

We report here on an extremely powerful wiggler, based on a new design, which will be the source of synchrotron radiation for Beam Line VI at SSRL; a joint project between Exxon Corporation, LBL and SSRL. Based on the design parameters, this wiggler will produce the most powerful x-ray beam yet achieved anywhere.

The high performance of the wiggler is due to two new features of the design:

1. The magnet is a hybrid design,[1] employing rare-earth cobalt (REC) permanent magnet material plus steel, thus achieving higher fields than is possible in earlier designs[2,3] which use no steel.

2. The magnet is situated outside a thin-walled (1 mm thickness) flexible vacuum chamber which can be opened to provide full vertical aperture (1.8 cm) for the injected beam into SPEAR and then closed down to the smaller aperture (< 1 cm) that is adequate for the stored, damped beam.

The basic parameters for this wiggler are given in Table 1.

The computed wiggler spectrum for a 1.30 Teslas peak magnetic field with SPEAR operating under normal conditions of 3.0 GeV and 100 ma is shown in Figure 1. At this operating point the electrons traversing the wiggler radiate a total power of 1.9 kw. At 1.64 T peak field the radiated power is 3.0 kw. Corresponding peak power densities at 7.5 m are 5.8 kw/cm^2 and 7.2 kw/cm^2 respectively which pose severe design problems for beam line components which have been described elsewhere.[4]

Measurements made on SPEAR show that the stored beam lifetime is not compromised if the full vertical aperture at the wiggler location is reduced to about 0.8 cm. A 1.2 cm magnet gap (1.21 T), with 0.3 cm vertical aperture for the vacuum chamber still leaves 0.9 cm vertical aperture for the beam. Smaller gaps may be possible under certain operating conditions or with improvements to SPEAR. In the small gap, wiggler mode of operation and with SPEAR operating at 3.0 GeV, the magnet produces an intense continuous spectrum with a critical energy of 7.2 keV at 1.21 T and 9.8 keV at 1.64 T. This critical energy varies quadratically with the electron energy, and SPEAR operates often at 3.5 GeV and has the capability to reach 4.0 GeV. The magnet can also be operated at large gaps and under these conditions it functions as an undulator with $K = 0.934\ B(T)\ \lambda_u\ (cm) \approx 1$, producing a spectrum with very high brightness, quasi-monochromatic peaks in the 1 keV region with lower total radiated power. Figure 1 also shows a typical undulator spectrum. More information about wiggler and undulator magnets is referred to in recent reviews.[1,5,6]

*Work supported by Office of Energy Research, DOE Contract No's DE-AC03-76SF00098, and +DE-AC03-82ER13000, +NSF Contact No. DMR81-12343, +NIH Grant 5 P41 RR01209.

Table 1
Beam Line VI Wiggler Parameters

Peak magnetic field range (teslas)	0.006-1.64
Magnetic period (cm)	7.0
Number of completed periods	27
Effective magnetic length (cm)	193.4
Beam vertical aperture range (cm)	1.8-0.5
Pole to pole aperture range (cm)	12-0.8
Wiggler horizontal aperture (cm)	± 1.0
Aperture field tolerance (lessor of)	30 G or ΔB/B of 5%
Pole width (cm)	8.5

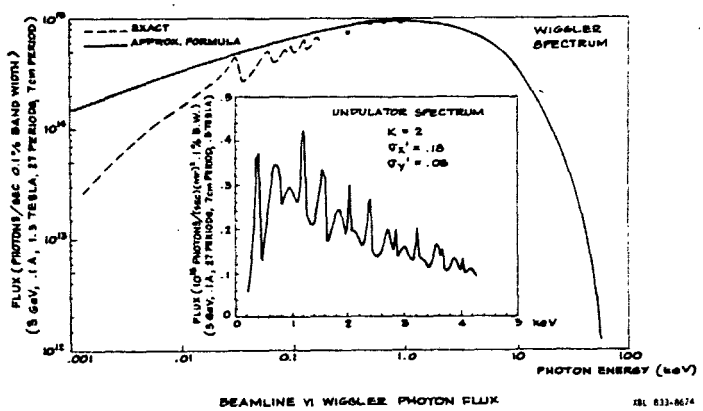

Figure 1

Magnetic Design

This wiggler is designed with the REC-steel hybrid configuration because it has the following advantages over the pure REC configuration:

1. The achievable field strength for small gap to period length ratios is considerably higher.[1]

2. The field distribution is dominated by the shape of the pole surfaces making the field strength and distribution much less dependent on the REC material properties.

3. The peak field at each pole can be tuned with variable flux shunts at each pole.

Figure 2 shows the wiggler cross-section. This specific geometry was arrived at by making a number of computer runs with the PANDIRA[7] magnetic design code. The peak field strength was maximized at the lowest gap/period length ratio (.114). The pole width, 8.5 cm

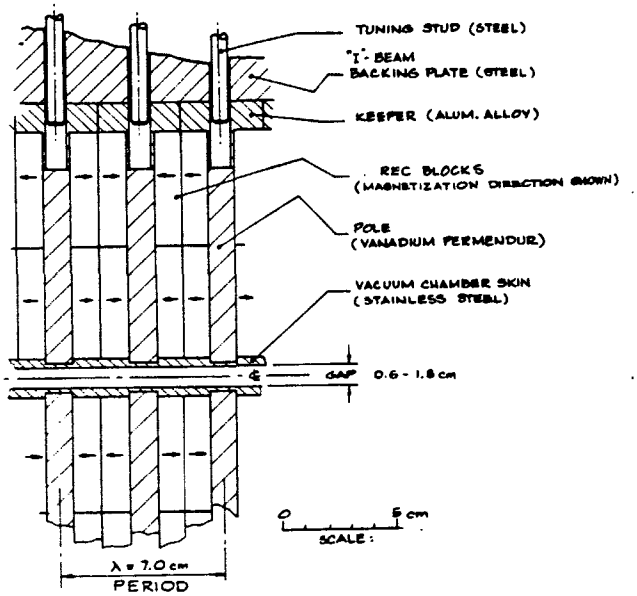

WIGGLER ELEVATION CROSS SECTION

XBL 824-9152

Figure 2

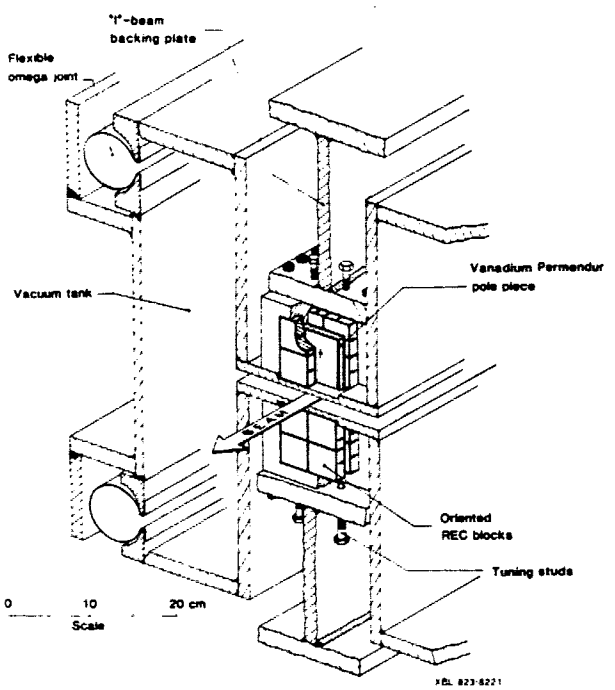

BEAM LINE VI WIGGLER

Figure 3

(see Figure 3) was chosen on the basis of magnetic measurements performed on a 1/2 period wiggler pole assembly with steel mirror plates.[4]

To correct a possible deflection and/or displacement of the electron beam going through the wiggler, a pair of correction coils are provided on the end poles at each end of the wigglers. With Poisson,[8] these coils are designed with a pole and REC above the coil so that the correction coil current over the range of wiggler gaps is minimized.

Design

Magnetic Structure

The magnetic structure of the wiggler is shown in Figures 2, 3 and 4. This structure consists of two "I" beam backing plates to which each has 55 half period keeper assemblies and two end keepers attached.

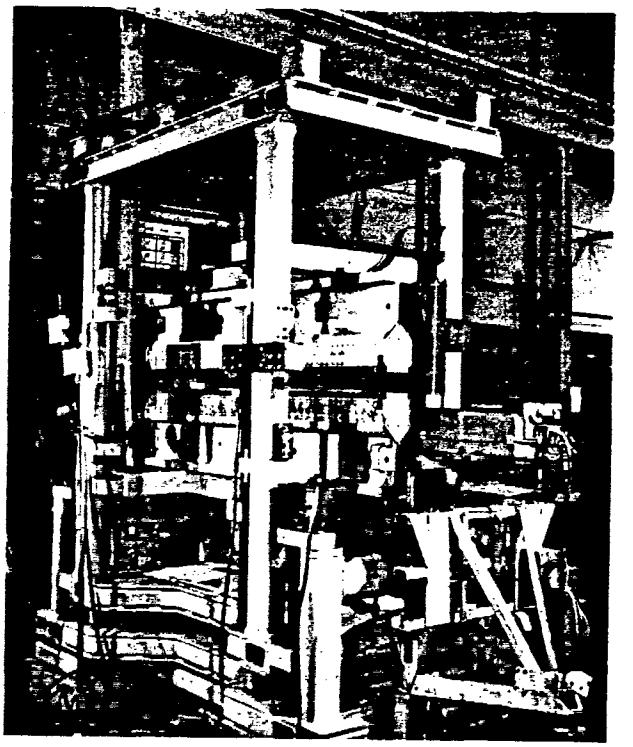

Beam Line II Wiggler - Undergoing Magnetic Measurements

Figure 4

The basic building block of this design is the 1/2 period keeper assembly which consists of an aluminum holder, a vanadium permendur pole (1.26 cm x 8.5 cm x 9.73 cm) and eight REC blocks (1.12 cm orientation direction x 5.12 cm x 5.37 cm). Manufacture of these assemblies was achieved with the following steps:

1. $SmCo_5$ blocks were ordered with magnetic specifications[9]; an H_c > 9000 oersteds and a magnetic moment uniformity of ±2.5% about the average. REC material was provided by Vacuumschmelze, Hanau, W.G. with an H_c = 9150 oersteds and a magnetic moment uniformity of ± 3.7% in 1036 blocks (± 3.3% in 986 blocks and ± 2.1% in 880 blocks).
2. After receipt of blocks, the magnetic moment of each block was measured and sorted with a resulting uniformity of ± 0.054% for the total magnetic moment of each set of four blocks (two per keeper assembly).
3. The vanadium permendur poles were machined, heat treated in a hydrogen furnace at 1120°C for four hours and then finished machined. Each pole was pinned to a holder with four stainless pins. Two dowel pins are provided in the back of each holder to provide the 3.5 cm spacing of each keeper assembly on the "I" beam backing plate.
4. The REC Blocks were positioned in the holder-pole assemblies with a two component adhesive, Technicoll 8260, Beiersdorf, W.G., with fixtures placing the blocks on the pole and clamping the blocks during assembly, and cured at 50°C for two hours.

The end pole assemblies are fabricated with a conduction cooled wire wound coil that have been substituted for some of the REC material.

The 1/2 period keepers and end pole assemblies are bolted onto the precision flat surface of the beam and shimmed such that the pole faces (57) are aligned to a

plane within ± .013 mm. Two 3/8-16 NC threaded iron bolts are available to magnetically tune each pole. End field clamps are 1.27 cm thick steel plates.

Figure 4 shows how the magnetic structure is supported.

Vacuum System

An "out of vacuum" wiggler design was selected because this eliminated the complexities of a UHV design for the wiggler. The basic requirements for the vacuum chamber were that it was to be thin at the magnet poles and capable of enlarging the aperture for SPEAR injection. The chamber is of 304 SS construction. Figure 2 shows a chamber cross-section at the poles. Chamber thickness at the aperture is 4 mm which has been scalloped out to 1 mm thickness at the pole locations. Fabrication of these aperture chamber sections resulted in each surface flat to within 0.5 mm, hence the vacuum chamber occupies 3 mm of aperture. Figure 3 shows the two omega joints which give the chamber its flexibility. These joints, 316SS, 7.5 cm nominal diameter and race track plan, 76 cm x 254 cm, allow the chamber to open to 1.8 cm for SPEAR injection and to close to a minimum of 0.5 cm (1.64 T). Bellows sections at the chamber ends allow ± 6 mm of motion both vertically and horizontally. Transition sections at each end provide conducting surfaces from the SPEAR ring chamber to the wiggler vacuum chamber aperture surfaces to minimize higher mode losses. Also, four position monitors, for sensing the SPEAR beams, and a mask are provided at each end for absorbing power from the adjacent bend magnets. The Wiggler vacuum chamber pumping speed provided is 1500 ℓ/sec.

Drive Systems

The wiggler is equipped with five remote drive systems with the following functions and motions.

Function	Drive	Range
Adjusts wiggler magnetic field	Magnet gap	0.8 cm to 12 cm, and to 90 cm for servicing
Allows for SPEAR injection	Vacuum chamber gap	0.5 cm to 1.8 cm
Allows alignment to SPEAR orbit	Vertical adj.	± 0.6 cm and to 35 cm for servicing
	Horizontal and yaw adj.	± 0.6 cm

The magnet gap and vacuum chamber gap drive systems are very similar. Each system consists of two support frames, with four ball screw nuts mounted to each which are in turn threaded onto four ball screw shafts. The upper half of the ball screw shaft is right-handed, the lower half is left-handed - thus, when turning the ball screw shafts, the gap opens or closes. The shafts are driven by a roller chain and sprocket arrangement. Power is supplied by a computer-controller, interfaced to the SPEAR control computer with a CAMAC system, to a stepping motor translator which powers the stepping motor. Torque is boosted by a double worm-gear reduction unit. An absolute position encoder is mechanically coupled to the drive system to provide the feedback signal, via an input register to the computer-controller. System protection is accomplished with a combination of microswitches, a slip clutch and mechanical stops.

The vertical adjustment drive is similar to the above drives except the ball screw shafts are only right-handed.

The horizontal and yaw adjustment drives are driven by computer controlled stepping motors, planetary gear reduction units and worm-gear jacks at each end of the base frame.

Magnetic Measurements

Magnetic measurements are summarized below:

1. At the wiggler midplane, the vertical magnetic field is sinusoidal along the beam axis as expected. The averaged maximum midplane magnetic fields, for 53 poles (peaks and valleys) at various gap positions are summarized below. Uniformity was much better than ± 2% at small gaps so the tuning studs have not been used.

2. Transverse vertical field measurements were taken at the aperture extremes at the midplane for all 55 poles. Average field variations for 55 poles for the 2 cm aperture width are also tabulated.

Gap (cm)	Averaged maximum midplane field (teslas)	Uniformity Std.-Dev. (Gauss)	Variation over transverse aperture (Gauss)
0.80	1.636	79	23
1.20	1.207	74	7
1.63	0.872	59	3
2.70	0.462	38	3
4.50	0.191	25	6
7.00	0.061	15	6

3. The end pole current settings were determined for gaps, so that the vertical field integral was less than 50 gauss-cm for each half of the wiggler. Below are given the uncorrected half magnet field integrals. At a 1.2 cm gap, a total correction range of 2740 gauss-cm or 137 gauss-cm/ampere is available. End pole coil sensitivity is given.

4. The measured midplane horizontal field integral of the entire wiggler, which is not adjustable, is also tabulated.

(cm)	Uncorrected half wiggler vertical field integrals (2) (Gauss-cm)	End pole coil sensitivity (Gauss-cm/amp)	Wiggler horizontal field integral (Gauss-cm)
0.80	748, 308	179	205
1.20	-11, -161	137	175
1.63	67, -81	119	122
2.70	120, 13	94	99
4.50	93, 36	73	86
7.00	54, 12	50	111

Acknowledgement

The authors thank T. Elioff, P. Eisenberger and D.A. Shirley for project support and G. Harnett, D. Humphries, M.I. Green, J. Meneghetti, D. Nelson, J. Wirth, and laboratory shop personnel, for their assistance.

References

1. K. Halbach, Proc. Free Electron Laser Conf., Bendor, France, 1982.
2. K. Halbach, J. Chin, E. Hoyer, H. Winick, R. Cronin, J. Yang and Y. Zambre, IEEE Trans. Nucl. Sci. NS-28, 3136-38 (1981).
3. K. Halbach, Nucl. Instr. and Meth. 187 (1981) 109.
4. E. Hoyer, et al., Nucl. Instr. and Methods (1983) to be published.
5. H. Winick, G. Brown, K. Halbach and J. Harris, Physics Today 34, 50-63 (1981).
6. G. Brown, K. Halbach, J. Harris and H. Winick, Nucl. Instr. and Meth. (1983) to be published.
7. Pandira is an improved version of Poisson which allows solution of permanent magnet and residual field problems.
8. Poisson is an improved version of TRIM (A.M. Winslow, J. Computer Phys. 1, 149, 1967) developed by K. Halbach, et al.
9. E. Hoyer, Magnetized Rare Earth Cobalt Blocks, LBL Specification M636, 1982.

This report was done with support from the Department of Energy. Any conclusions or opinions expressed in this report represent solely those of the author(s) and not necessarily those of The Regents of the University of California, the Lawrence Berkeley Laboratory or the Department of Energy.

Reference to a company or product name does not imply approval or recommendation of the product by the University of California or the U.S. Department of Energy to the exclusion of others that may be suitable.

TECHNICAL INFORMATION DEPARTMENT
LAWRENCE BERKELEY LABORATORY
UNIVERSITY OF CALIFORNIA
BERKELEY, CALIFORNIA 94720