LBL-15158 c.2

Lawrence Berkeley Laboratory

UNIVERSITY OF CALIFORNIA

RECEIVED
LAWRENCE
BERKELEY LABORATORY

MAY 17 1983

LIBRARY AND
DOCUMENTS SECTION

Accelerator & Fusion Research Division

Presented at the Particle Accelerator Conference
on Accelerator, Engineering and Technology,
Sweeney Convention Center, Santa Fe, NM,
March 21-23, 1983

CONCEPTUAL MAGNET DESIGN FOR AN IRON-FREE COLLIDING BEAM ACCELERATOR

C. Taylor and R.B. Meuser

March 1983

TWO-WEEK LOAN COPY

This is a Library Circulating Copy
which may be borrowed for two weeks.
For a personal retention copy, call
Tech. Info. Division, Ext. 6782.

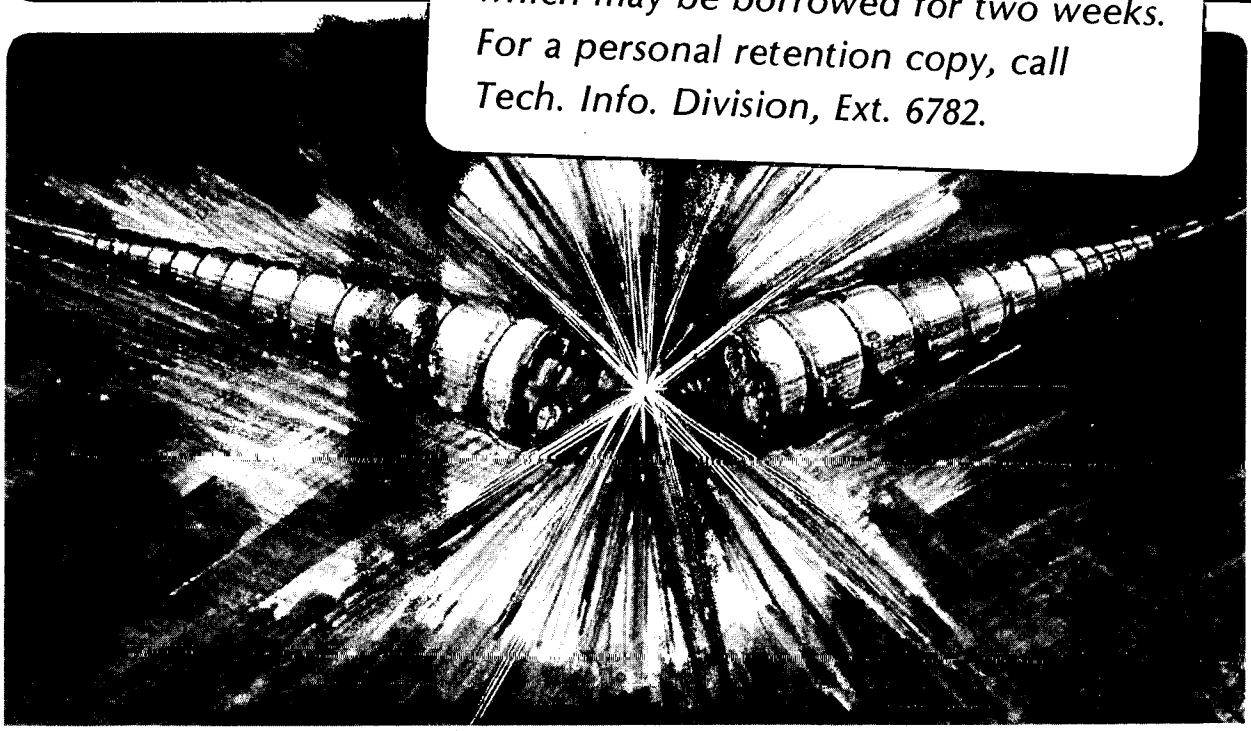

Prepared for the U.S. Department of Energy under Contract DE-AC03-76SF00098

LBL-15158 c.2

DISCLAIMER

This document was prepared as an account of work sponsored by the United States Government. While this document is believed to contain correct information, neither the United States Government nor any agency thereof, nor the Regents of the University of California, nor any of their employees, makes any warranty, express or implied, or assumes any legal responsibility for the accuracy, completeness, or usefulness of any information, apparatus, product, or process disclosed, or represents that its use would not infringe privately owned rights. Reference herein to any specific commercial product, process, or service by its trade name, trademark, manufacturer, or otherwise, does not necessarily constitute or imply its endorsement, recommendation, or favoring by the United States Government or any agency thereof, or the Regents of the University of California. The views and opinions of authors expressed herein do not necessarily state or reflect those of the United States Government or any agency thereof or the Regents of the University of California.

LBL-15158

CONCEPTUAL MAGNET DESIGN FOR AN IRON-FREE COLLIDING BEAM ACCELERATOR*

C. Taylor and R.B. Meuser

Lawrence Berkeley Laboratory
University of California
Berkeley, California 94720

March 1983

*This work was supported by the Director, Office of Energy Research, Office of High Energy and Nuclear Physics, High Energy Physics Division, U. S. Dept. of Energy, under Contract No. DE-AC03-76SF00098.

CONCEPTUAL MAGNET DESIGN FOR AN IRON-FREE COLLIDING BEAM ACCELERATOR*

C. Taylor, and R.B. Meuser
Lawrence Berkeley Laboratory
University of California
Berkeley, California 94720

Summary

Superconducting accelerator magnets usually have magnetic iron yokes to obtain maximum magnetic field and to limit stray field. However, the iron is expensive and heavy. The smaller size and weight of an iron-free magnet can result in lower magnet and refrigeration costs. However in a colliding beam accelerator the stray field from one ring produces aberrations in the field in the other.

A way to eliminate this mutual interference is to surround each magnet with a coil that exactly cancels the field from the in the other ring magnet. That is expensive in terms of superconductor requirements. However the cancellation of the external dipole field component is unnecessary. Only a small amount of superconductor is required for cancellation of the higher-order field-aberration components.

Parameters for the iron-free magnet concept are investigated, and a preliminary conceptual design for an accelerator is presented.

Introduction

If the two rings of a colliding-beam accelerator can be spaced very close together, the superconducting magnets can be in a single cryostat and share the same structural support; these factors tend to make the magnets less expensive than those of separate rings.

This idea was examined for the 130-mm-I.D., 5-T CBS superconducting magnets at BNL,[1] and successful models were built with two magnets sharing the same cold-iron structure; a complication was the assymetrical saturation effect of the close-in iron.

However, for collider magnets of smaller bore it may be advantageous to eliminate (or minimize) the magnetic iron, and to place the two rings very close to each other. The resulting light weight of the coil and structure reduces the conduction heat leak of the mechanical supports, and the small diameter of the cryostat reduces the radiation heat leak; both factors tend to reduce the cost of the refrigeration system.

Without iron, more ampere-turns are required for a given central field; however, at high fields, saturation limits the advantages of iron, and the large iron mass is a serious drawback.

The effect of the stray field of one magnet upon the field quality in the aperture of the adjacent magnet will affect the accelerator operation and must be properly compensated. In this paper, we calculate these stray-field effects and show that compensation is quite easy to accomplish. An example case is described for a two-in-one, 8-T collider magnet with 50 mm coil inside diameters and 160 mm separation between rings (Figure 1). The stray field outside the cryostat is small and decreases with $1/r^3$ with both rings energized. The effect of a thin iron shield -- possibly the cryostat wall -- is analyzed and can eliminate the stray field, if that is considered necessary.

*This work supported by Department of Energy, Division of High Energy and Nuclear Physics, under contract number DE-AC03-76SF00098.

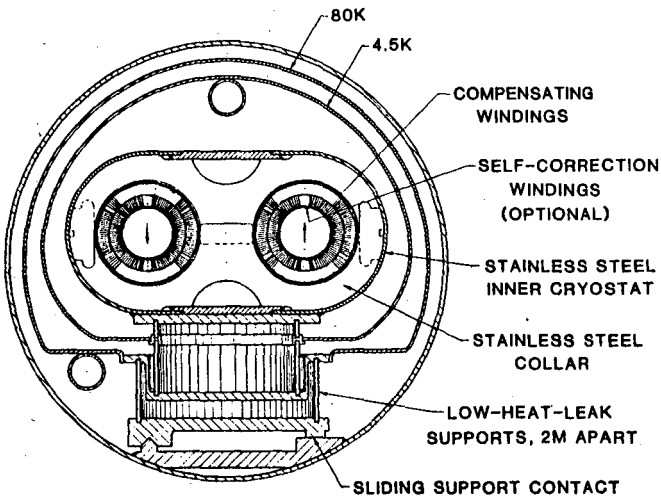

Figure 1. Conceptual design of an 8-tesla dipole pair for a very-high-energy collider. The coil inside radius is 50 mm, and the coil center-to-center spacing is 160 mm. A 2-kelvin cryostat for Nb-Ti superconductor is shown.

Discussion

We have calculated the stray field produced by several kinds of coils -- a single 60-degree-sector coil and a two-layer, so-called intersecting ellipse coil -- for inside-to-outside radius ratios up to 2.0. We have found that such coils can be adequately represented, for practical purposes, by an thin, idealized, cosine-theta (ICT) coil having a radius equal to the arithmetic average radius of the thick coil; for the example case, the ICT representation agrees with "real" cases within 5 percent in magnitude of multipole coefficients of the field produced in the adjacent ring. All equations and graphs presented here are based on a thin-ICT model.

We represent the field on the x-axis, $(B_y)_{y=0}$, by

$$B = C_1 + C_2(x/\rho) + C_3(x/\rho)^2 + \ldots + C_n(x/\rho)^{n-1} + \ldots \quad (1)$$

(See Appendix I, Nomenclature.) C_n, then, is the magnitude of the 2n-pole field vector at radius ρ.

The total field in the aperture, with the two dipoles driven in opposite senses, is given by (Ref. 2) (see Appendix 1, Nomenclature):

$$C_1 = B_o\left[1 + (a/2s)^2\right] \quad (2a)$$

$$C_n/C_1 = \frac{n}{1 + (a/2s)^2}\left(\frac{\rho}{a}\right)^{n-1}\left(\frac{a}{2s}\right)^{n+1} \quad (2b)$$

where B_0 is the field in the aperture of a coil produced by that coil. In Figure 2 we show results calculated using this formula for a coil having an inside-to-outside radius ratio, a_2/a_1, of 2.0 -- about that of our example design -- evaluated for ρ/a_1 of 0.8, corresponding to the bore tube inside radius. A value $2s/a_1 = 4$ represents the condition where the outsides of the coils are in contact, and a value $2s/a_1 = 6$ represents our example design. For the example design, inasmuch as the value of C_5/C_1 is only about 1×10^{-4}, the necessity of providing a compensating coil seems marginal. The dipole component of the stray field simply adds to the central field in the adjacent aperature and need not be compensated.

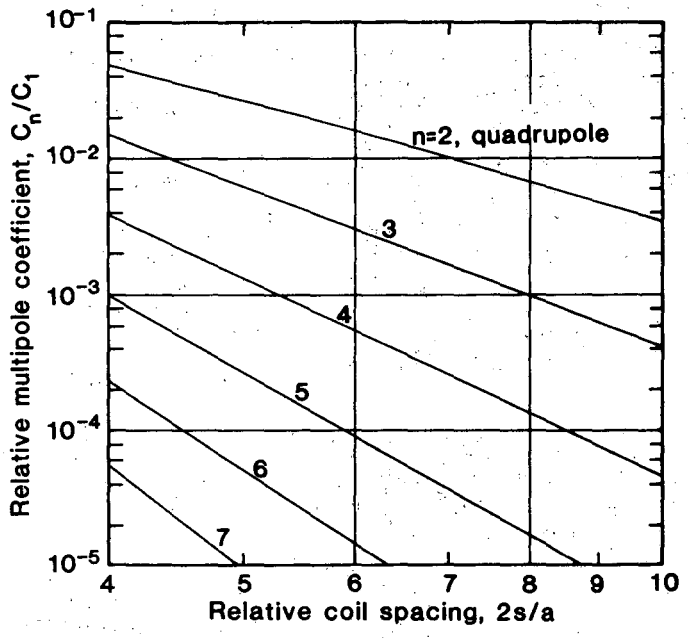

Figure 2. Field qualtity in dipole magnets as affected by coil spacing. ($a_2/a_1 = 2$, $\rho/a_1 = 0.8$).

In Figures 3 and 4 we show how the ampere-turns required for the compensating coils vary with coil spacing. Again, the graphs are for $a_2/a_1 = 2$. In Figure 3 the compensating coil is located at the dipole-coil inside radius, while in Figure 4 it is at the outside radius. We see that, while the ampere-turns required for the compensating coils are much greater when they are on the outside of the dipole coils, the ampere-turns are still quite small. For our example design with spacing of $2s/a_1 = 6$. (4 percent for n = 2, quadrupole; 1.5 percent for n = 3; and 1.2 percent for n = 4.)

The greater ampere-turns requirement for compensating coils on the outside is partially mitigated by the lower magnetic field (down by 40 percent) in that region.

If the compensating coils are separated-function coils located between the dipole magnets, then Figures 3 and 4 still apply but in a different way. To first order, if the thickness of a compensating coil equals that of the dipole coils, and it has the same current density, then the ratio of the length of the compensating coil to that of the main coil is represented by the ordinates of the graphs, and we would use an ordinate value intermediate between those given by the two graphs. If the compensating coils are thinner, then they must be proportionately longer.

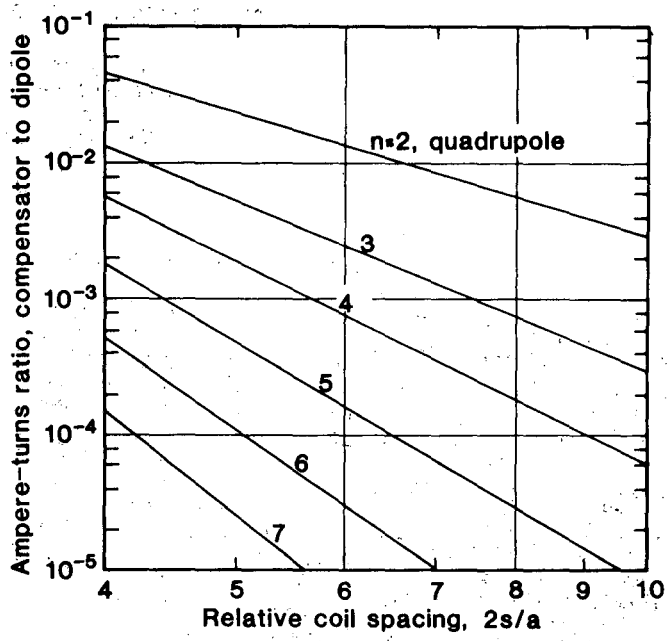

Figure 3. Ampere-turns required for compensating coils on the <u>inside</u> of the dipole coils. ($a_2/a_1 = 2$).

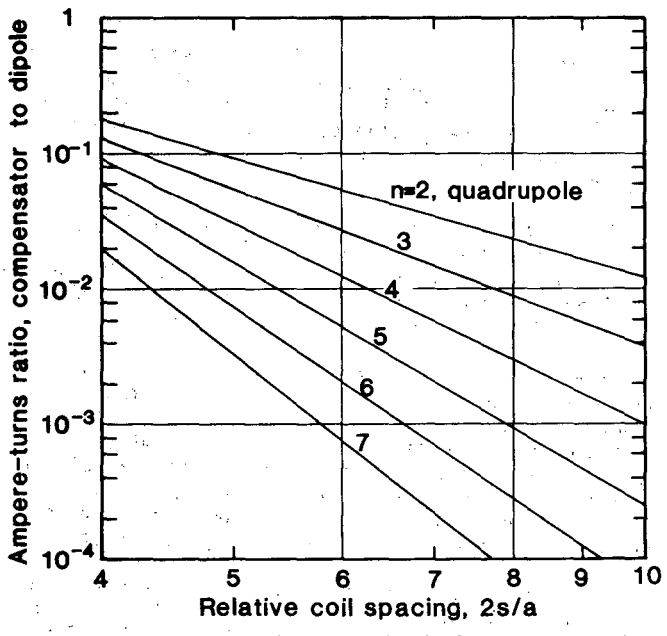

Figure 4. Ampere-turns required for compensating coils on the <u>outside</u> of the dipole coils. ($a_2/a_1 = 2$) (Note that the ordinate scales in Figures 3 and 4 do not correspond.)

One might be concerned about the stray field outside the cryostats. The two-dimensional stray field on the x-axis is given by[2]:

$$B = 4\, B_0\, s\, x / (x^2 - s^2)^2 \qquad (3)$$

where B_0 is the field in the aperture. For $x \gg s$ the stray field is essentially that of a regular (non-skew) quadrupole magnet, and falls off as r^{-3}. For a magnet with $a_2/a_1 = 2$, one somewhat thicker than our base design, the stray field is presented in the following table.

Stray Field

Coil inside radius	25 mm
Coil outside radius	50 mm
Coil spacing, center-to-center	160 mm

Radius, m	1	2	5
Field, T	3.7×10^{-3}	4.5×10^{-4}	2.9×10^{-5}

The stray field at a distance of 5 meters is already less than the earth's magnetic field. But closer to the magnet the stray field could conceivably cause problems, and so we consider the effect of replacing the non-magnetic vacuum chamber with one made of mild steel, or of providing a separate shield. Some concerns over the use of such a shield are: The effectiveness of the shield in reducing stray field levels; the effect of the shield on field quality in the magnet apertures, and of changes in field quality, depending on aperture field levels, resulting from saturation.

The radial field at the inside surface of the iron at 45°, 135°, etc., is essentially given by the equation:

$$B = 8\, B_o\, a^2\, s \,/\, b^3 \qquad (4)$$

where B_o is the field in the aperture. For our example design, with the iron vacuum vessel having a radius of 200 mm, the peak radial field is only 0.90 T. The required thickness of the vessel, for a maximum field to 2 T in the iron, resulting in a stray field of only a few gausses right next to the vessel, is 45 mm. The required thickness goes as b^{-2}, and the volume of iron as b^{-1}.

Since the iron is not saturated, we can calculate the field aberrations as if the iron has infinite permeability. Under those conditions, the field aberrations produced by the iron become easy to calculate, but the expressions -- messy series of terms -- are too long to present here. For the example design, however, with the 8-inch-radius steel vacuum vessel, the aberrations are as shown in the following table:

Field Aberrations caused by Iron Shield

Coil inside radius =	25 mm
Coil outside radius =	50 mm
Coil spacing, center-to-center =	160 mm
Iron inside radius =	200 mm

C_2/C_1 (Quadrupole)	6.40×10^{-3}
C_3/C_1 (Sextupole)	2.40×10^{-4}
C_4/C_1 (Octapole)	2.52×10^{-4}

In the dipole magnets, compensation of the dipole component of the stray field from one magnet in the aperture of the adjacent magnets is certainly unnecessary. Compensation of the quadrupole component by special windings is probably unnecessary too; the strengths of the quadrupole magnets that are required as part of the ring lattice structure can be adjusted slightly to compensate. Similarly, n = 3, and 4 compensation can be provided by using separate coils located in a separate trim coil package along with the normal trim coils required for accelerator tuning. The extent to which higher order field-aberrations must be compensated depends on their magnitudes and more extensive analysis of the particle beam dynamics, and is not known.

A similar analysis of the quadrupole magnet has been performed.[2] The stray-field components fall off more rapidly than those of the dipoles. Each quadrupole produces a dipole component in the adjacent quadrupole, but these cancel within each cell of the accelerator structure.

Some attention has been paid to the possibility of using short-circuited compensating windings, driven by induction, in place of separately excited ones. Our very preliminary conclusion is that in this case there is no compelling incentive for using such compensators since the required excitations are predictable, identical for all coils, and linear with field.

Conclusion

The results of this brief, preliminary study strongly suggest that, for closely spaced rings using magnets with no close-in iron flux-return yokes:

1. The interaction of the magnetic fields of the magnets of the two rings with each other and with an external iron shield, if used, can be compensated with little difficulty, or ignored;
2. The capital and operating costs of such a machine can be substantially less than that of a machine of a more conventional configuration.

Acknowledgments

The authors express their appreciation to Al Garren for designing a lattice for a 20 TeV, two-in-one accelerator (not presented here) and for consultation on beam-dynamics factors that affect the magnet and compensator design, and to Richard Wolgast for the preliminary mechanical design illustrated in Fig. 1.

References

1. CBA Newsletter, No. 2, November 1982, Brookhaven National Laboratory.
2. Robert Meuser, "The Magnet Field of a Pair of Collider Magnets in a Common Iron Shield", Lawrence Berkeley Laboratory Report LBL-15860, March 1983.

Appendix I

Nomenclature

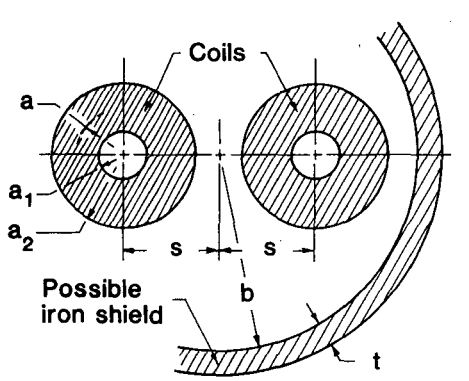

x	Horizontal distance measured from center of one coil or from center of system
C_n	Multipole coefficent of field, see Eq. 1.
ρ	Reference radius for multipole coefficents
B_o	Dipole field in magnet aperture

This report was done with support from the Department of Energy. Any conclusions or opinions expressed in this report represent solely those of the author(s) and not necessarily those of The Regents of the University of California, the Lawrence Berkeley Laboratory or the Department of Energy.

Reference to a company or product name does not imply approval or recommendation of the product by the University of California or the U.S. Department of Energy to the exclusion of others that may be suitable.

TECHNICAL INFORMATION DEPARTMENT
LAWRENCE BERKELEY LABORATORY
UNIVERSITY OF CALIFORNIA
BERKELEY, CALIFORNIA 94720