LBL-15264
Preprint c.2

Lawrence Berkeley Laboratory
UNIVERSITY OF CALIFORNIA

Accelerator & Fusion Research Division

RECEIVED
LAWRENCE
BERKELEY LABORATORY
AUG 29 1983
LIBRARY AND
DOCUMENTS SECTION

Submitted to Review of Scientific Instruments

PULSED HOT CATHODE (LaB_6) DISCHARGE FOR UNIFORM PLASMA PRODUCTION

S.E. Savas and R.V. Pyle

June 1983

TWO-WEEK LOAN COPY

This is a Library Circulating Copy which may be borrowed for two weeks. For a personal retention copy, call Tech. Info. Division, Ext. 6782.

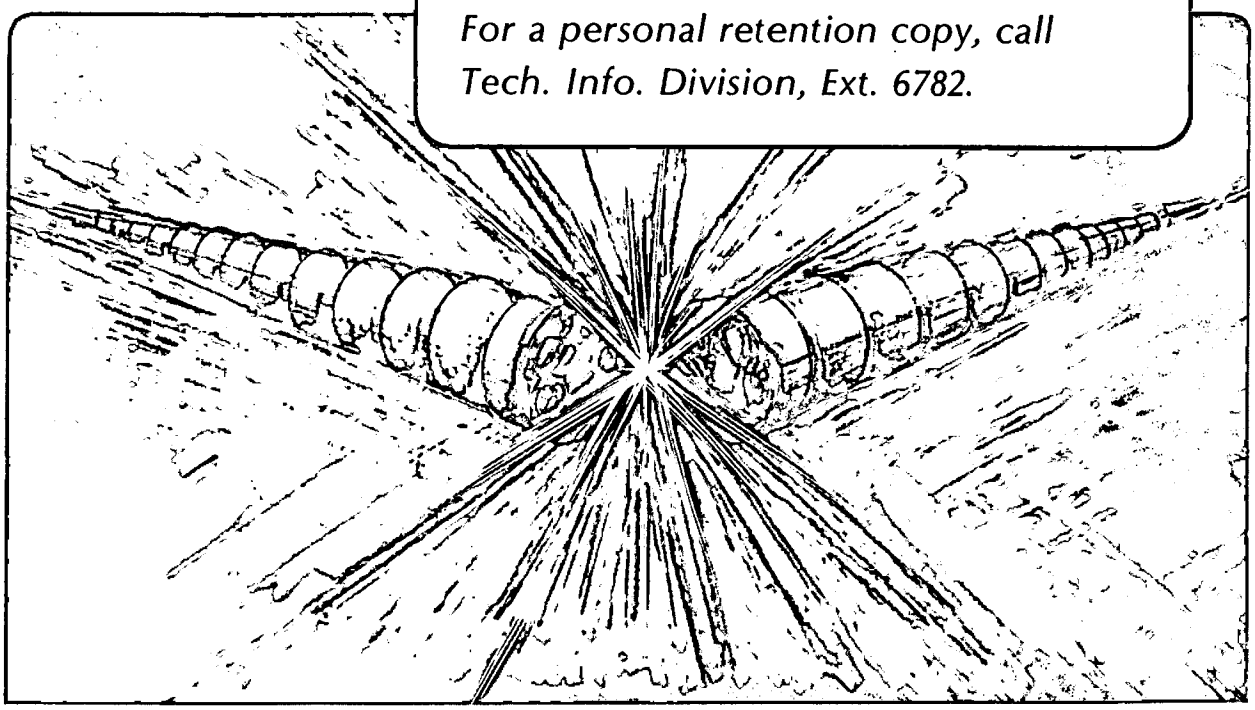

LBL-15264 c.2

Prepared for the U.S. Department of Energy under Contract DE-AC03-76SF00098

DISCLAIMER

This document was prepared as an account of work sponsored by the United States Government. While this document is believed to contain correct information, neither the United States Government nor any agency thereof, nor the Regents of the University of California, nor any of their employees, makes any warranty, express or implied, or assumes any legal responsibility for the accuracy, completeness, or usefulness of any information, apparatus, product, or process disclosed, or represents that its use would not infringe privately owned rights. Reference herein to any specific commercial product, process, or service by its trade name, trademark, manufacturer, or otherwise, does not necessarily constitute or imply its endorsement, recommendation, or favoring by the United States Government or any agency thereof, or the Regents of the University of California. The views and opinions of authors expressed herein do not necessarily state or reflect those of the United States Government or any agency thereof or the Regents of the University of California.

LBL-15264

Pulsed Hot Cathode (LaB_6) Discharge for Uniform Plasma Production

S. E. Savas and R. V. Pyle

Lawrence Berkeley Laboratory
University of California
Berkeley, CA 94720

Abstract

We have made a compact, uniform, highly-ionized slab hydrogen plasma for use in an atomic collision experiment. The plasma is made by a pulsed hot-cathode discharge (<10 ms) in a well evacuated (~10^{-6} Torr) chamber in a (~ 1 kGauss) magnetic field. The cathode is made of sintered LaB_6, heated radiatively to 1400° - 1600° C. H_2 gas (10 to 100 μL STP) is injected into the gas baffled anode about 600 μs before the start of the discharge. Arc voltages from 1 kV to 2 kV produce arc currents with a few % ripple from 10 A to 250 A over a discharge area of 10.75 cm x 2.2 cm. Electron densities up to 9 x 10^{13} cm^{-3} with T_e between 5 and 10 eV and n_e within 10 % of maximum for an area of ~ 6 cm x 1.2 cm are measured. Discharges are quite stable over a large range of arc current, magnetic field, arc voltage, and gas feed.

---

* This work was supported by the Director, Office of Energy Research, Office of Fusion Energy, Development and Technology Division, of the U. S. Department of Energy under Contract No. DE-AC03-76SF00098.

I. Introduction

Interaction with a plasma ($n \sim 10^{15}$ cm^{-2}) is known to be an efficient way to produce a beam of neutral hydrogen or deuterium atoms (useful for auxiliary heating in fusion reactors) from energetic (<1 MeV) negative ions.[1] We examined several alternatives before choosing a hot cathode discharge as a plasma target for D^- neutralization studies. Our need for a small highly ionized, thick plasma with a minimum of gas around it led us to consider shock tubes[2], hollow cathodes[3,4] reflex discharges[5,6] and Q machines.[7] None of these were felt likely to provide a diagnosable target meeting the above requirements. However, a recent experiment in Livermore[8] had proved that a pulsed, hot-cathode discharge might provide a suitable target plasma if one would make a cathode of sufficient width and retain the MHD stability they had gotten with the Baseball I coil in a simpler geometry. We decided to make the cathode from sintered LaB_6 for its high thermionic emission at relatively low temperature (1500°C)[9] and resistance to poisoning by atmospheric gases. For the magnetic field we chose simple solenoidal coils and configured them to provide a radial minimum of the field strength on axis. We felt this would provide MHD stability for a plasma "line-tied" to the electrodes.

The experiment of Ref. 8 had a tungsten rod ($\frac{1}{8}$" dia) cathode placed in one mirror throat and the anode, rotated by 90° and used for gas feed, in the other. The cathode was heated ohmically (> 3000°K) and a voltage of -2500 Volts applied to it just after a small amount of H_2 gas was puffed into the anode. The resulting discharge current of up to 300 Amperes produced a very highly ionized (~ 99%) plasma of moderate density (< 10^{14} cm^{-3}) and temperature (T_e < 16 eV).

The discharge which is the subject of this paper (See Table I for a list of parameters) is also pulsed between a hot cathode and gas fed anode which are aligned along a magnetic field. The vacuum chamber, instead of being spherical as in Ref. 8 is much smaller (8" diameter) and cylindrical. This allowed closer placement of an analysis chamber. The cathode, a rectangular piece of LaB_6, (10.75 cm x 2.2 cm) was heated radiatively in a multiple heat shield to provide plasma target uniformity and reduce necessary cathode heater power. Typical operating parameters were $V_{cathode}$ = -1500 V, V_{anode} = ground, I_{arc} = 100 Amperes, B = 1360 Gauss, $N_e \simeq 3 \times 10^{13}$ cm^{-3} Te ≃ 7 eV. The degree of ionization was adjustable from a few percent to 25 . This upper limit was due to the small chamber size and small electrode spacing.

We believe that the operating ranges given in Table I can be extended for use in other applications. A more symmetric cathode shape, smaller coil spacing or greater electrode spacing should allow higher density. Longer electrodes should improve atomic fraction and degree of ionization. Low arc currents and better pumping should allow much longer arc duration.

Recent work has shown that hollow cathodes may produce a more practical target for negative ion beam stripping.[10] These have the advantage of operating D.C. with small enough magnetic fields to allow acceptable beam divergences.

Table 1. A list of physical characteristics of discharges.

Parameter	Value
Anode-Cathode Separation	18 cm
Cathode Dimensions	10.75 cm x 2.2 cm x 0.2 cm
Cathode Material	Sintered LaB_6
Discharge Voltage	> 500 Volts, < 2 K Volts
Discharge Current	$\leq$ 250 Amperes
Magnetic Field	700 Gauss < B < 1700 Gauss
Duration of Discharge	< 10 milliseconds
Background gas pressure	$\leq 5 \times 10^{-6}$ Torr
H_2 Pressure During Discharge	0.6×10^{-3} Torr < P < 4×10^{-3} Torr
Electron Temperature	4 eV to 11 eV
Electron Density	$n_e < 9 \times 10^{13}$ cm^{-3}
Cross Field Diffusion Time (Bohm)	$1.6 \times 10^{-5} < \tau_B < 5 \times 10^{-5}$ sec.

II. Apparatus

The discharge takes place in an 8" diameter, 14" long cylindrical stainless-steel chamber. This chamber (see Fig. 1) adjoins another in which there is titanium sublimation and all are pumped by an LN cooled 4" diffusion pump. Outside the chamber are two water-cooled copper coils (each 47 turns, 16.6" outside diameter, 11.0" inside diameter, 5.25" long) separated by ≈ 2". These coils are supported and enclosed in a cylindrical flux return shield of cold rolled steel.

Diagnostic and maintenance access to the arc chamber is very flexible and rapid via the conflat end flanges, and 8 ports located around its circumference and between the coils. The end flanges which support the electrodes can be demounted in a few minutes providing maintenance access to both electrodes and chamber. Used in these are two Langmuir probes, PIG gauge, observation windows, carbon foils, Faraday cup, controlled gas leak, a collimator and windows for interferometry.

The cathode (see Fig. 2) is a slab of sintered lanthanum hexaboride 4-1/4" x 7/8" x 0.1". This is held in a tantalum "picture-frame" type holder which allows the back to be heated by the radiation from a tungsten filament while the front side acts as a thermionic electron emitter for the plasma. This holder frame is supported by three molybdenum tubes which are clamped at the other end onto a water cooled copper slab. This in turn is mounted on a slightly larger piece of machinable ceramic which serves also to insulate the cathode from, while attaching it to the support structure which is at anode potential (= ground). In order to minimize the required power we have surrounded

the cathode piece and tungsten filament with four to six layers of heat shielding. These shields are made of dimpled molybdenum and tantalum sheet 0.003" to 0.005" thick. These shields extend almost 2" in front of the cathode and form an elongated box which has a rectangular hole in front just large enough for the discharge to pass.

The anode is made of three parts, a copper box 4-5/8" x 2-1/4" x 1-1/4" with 3/16" thick walls, a tantalum rectangle 4-1/4" x 2" x 0.060", and a duct having a rectangular cross section 7/8" x 4-1/4 made of 0.010" molybdenum. (See Fig. 3) These three fit together so as to provide both the electrical positive contact for the discharge and its gas supply. The gas enters the middle of the closed side of the copper box into a reservoir whose front side is the 0.060" thick Tantalum piece. From there it exits through eight holes, .060" diameter, into long, narrow rectangle chambers above and below the discharge and open to it.

The arc power supply is a capacitor-inductor pulse-line capable of providing 1000 Amperes at 2000 Volts for 2 milliseconds. There are SCR switches for connecting the negative output of the supply to the cathode (the anode is held at ground) and for shunting the current through an internal resistor cutting off current from the arc. The shunt SCR is automatically triggered if the arc current rises above a pre-set limit to avoid electrode damage. Otherwise, it is triggered after a pre-set elapsed time.

III. Operation

Because of its high voltage and low gas pressure this electric discharge can be difficult to start and maintain in the proper mode of operation. We pulse the starter with -40 kV about 600 μsec after injecting the hydrogen gas into the anode.[10] The resulting local arc draws a few thousand amps for a few microseconds and provides plasma to set up a sheath at the cathode thereby making an electric field to extract electrons. Once the arc has been struck it can operate in two distinct modes. The preferred mode of operation involves uniform thermionic emission by the cathode resulting in an arc current between a few and 250 Amps, with the arc voltage only slightly less than the supply voltage. When we inject too much gas or the background pressure is too high the arc makes a transition to a second mode in which the arc current is of the order of 1000 Amps and the arc voltage falls to less than 100 volts. In this mode the arc is non-uniform spatially and is no longer the pink color characteristic of the other mode (seems bluish to the eye). We have seen evidence of "tracking" on the cathode surface possibly due to "hot" spots wich may occur during the second mode of operation. These spots have been observed in cold cathode discharges to provide large currents and move on the cathode surface causing irregular "tracks".

We can control plasma density and temperature easily within the ranges of Table I. Within limits, an increase of gas input results in higher density and lower temperature. Increase of the magnetic field allows ever increasing currents and density but does not allow an increase in gas input. (The saturation level is independent of B).

Plasma density and temperature are relatively independent of arc voltage above 1500 Volts and fall off rapidly below 500 Volts. Arc current and plasma density are rapidly rising functions of the cathode temperature.

Several dozen hours of operating time between vacuum breaches for cathode maintenence is typical. (Our normal duty cycle was one 1-2 ms shot per minute with the cathode kept continually at operating temperature.) The LaB_6 requires occasional discharge cleaning (long duration, low current Argon discharges) in some circumstances to keep the emission efficiency of the cathode high. With a fresh slab of LaB_6, 0.1" thick and molybdenum heat shields around the cathode, we were able to run thousands of shots without need for cleaning. When using tantalum heat shields or after having already had to clean the LaB_6 surface we found we needed to discharge clean every few days or several hundred shots.

IV. Plasma and Gas Measurements

We operated the discharge under a range of values of arc voltage, magnetic field, cathode temperature and gas injected and observed the dependence on these of the plasma parameters as well as the general behavior of the discharge. We measured electron density and temperature in the arc using a Langmuir probe and electron line density with a laser interferometer. The measured dependences include spatial in vertical and horizontal (parallel to the beam's plane of motion) directions (See Fig 4), dependence on magnetic field strength, arc voltage and gas injected (see Fig. 5). The Langmuir-probe-measured density was integrated along a horizontal path used for relative electron density

values in the horizontal profile and was compared with the laser interferometer measurement of the integrated electron density. The probe date were interpreted using the model of Brown, Kunkel and Compher[11] for a drifting plasma in a magnetic field.

We determined the gas pressure using a fast Penning Gauge and by measuring the fraction of 250 keV D^- ions lost in passing through the chamber after the discharge. We found it to range from a few to ten times the plasma density. The Penning gauge was located at the wall of the discharge chamber and was unable to measure the pressure in the gas jet emerging from the anode. This was measured by the ion-beam technique in which we found the stripped fraction of a D^- beam passing through the discharge region 50 μsec after the discharge was crowbarred, and inferred the gas pressure using known stripping cross sections. However, the pressure this indicated still did not include the effects due to the plasma (i.e., ionization and dissociation). Combining the data from the two techniques and using a simple model[12] [i.e., using calculated dissociation and ionization rates with an estimated time of passage = (mean travel distance in plasma)/(particle speed)]for plasma effects on gas pressure we found that a typical 30 Ampere discharge with ~ 60 μL of injected gas at 3 kW of cathode power, V_{ARC} = 1500 V, and B = 1350 Gauss produced 5.10^{12} cm^{-3} (electrons plus ions) and ~ 6.10^{13} cm^{-3} of H_2 molecules (equivalent) in the same volume. For a 110 Amp discharge for the same voltage and magnetic field but only 40 μL of gas injected we found 1.25 x 10^{13} cm^{-3} (electrons plus ions) but only 3.10^{13} cm^{-3} of H_2. Using the same model to estimate the composi- tion of the target we found that for electron densities above 10^{13} cm^{-3} most of the ions are atomic and a large majority of the

emerging gas is in the form of H atoms. If one were to increase the anode-cathode spacing to tens of centimeters one would have almost no remaining molecular ions (H_2^+, H_3^+) in the plasma. Measurements with a residual gas analyzer showed nitrogen to be the main non-condensing impurity with a peak value for the most intense discharges of a few percent of total injected gas. The change in the color of the discharge during very long shots (> 50 ms) or those with a transition to the high current mode (I_{arc} > 1000 A) showed the presence of large amounts of impurities under these conditions.

V. Discharge Model and Power Flow

One can, by use of a simple model, gain some insight into the operation of this arc. Firstly, if one compares Bohm diffusion time with a parallel sonic flow time one concludes that most ions are lost along the magnetic field to the cathode. We have estimated the total power used by the plasma and this is a small fraction of the arc current times voltage. The rest of the power must promptly go to the electrodes. One such mechanism is the ion bombardment of the cathode. The ions flowing from the cathode at subsonic speed fall across the high voltage sheath near the cathode and bombard and heat the cathode. When we estimated the electron emission current from the cathode (by subtracting the ion current from the total) we found that the fraction of the power from these primary electrons transferred to the plasma is ~10%. Reference to other work with beam-plasma discharges[13,14] shows such to be typical and due to a two-stream absolute instability between primary and secondary electrons.

VI. CONCLUSIONS

The limits on the density and duration of the plasma were a function of our design choices. The coil spacing gave us a weak radial minimum in the magnetic field in analogy to the absolute minimum B of Ref. 8. However, the ends of the elongaged electrodes were 5 cm from the axis and near the limit of the radial minimum. Thus, to increase density limits one needs to assure that the radial gradient in B is steeper at the discharge boundary. A round cathode might also help since the then radial electric field would cause only azimuthal plasma drifts. The time limit on any discharge was a function of the discharge current. High current shots (< 150 Amps) saw rapid current rise during the shot up to the stability limit. Often, such a rapid current rise would cause a premature change of mode of the discharge. (This is perhaps due to high gas pressure due to supttering or desorption.) If one would use a tungsten cathode it would give a more steady arc current since it would be heated less during the shot by ion bombardment. Operating with low arc currents (~ 10 Amps) and fast pumping should allow tens of milliseconds of operation. For longer times one would have to deal with atmospheric gases desorbed from vacuum chamber walls.

We have shown above an easily built, low impurity, uniform hydrogen discharge plasma. It is probably limited to fraction-of-a-second pulsed operation and produces a divergence in an atom beam (stripped while traversing the plasma perpendicular to the magnetic field). We believe, however, that a plasma of this type may be useful in plasma or atomic collision research.

References

1. G. I. Dimov, A. A. Ivanov, and G. V. Roslyakov, Sov. Tech. Phys. 22, 1091 (1977).

2. W. S. Cooper, and W. B. Kunkel, Phys. Rev. 138A, 1022 (1965).

3. R. E. Gibbons, and R. J. Mackin, Proceedings of the 5th Conf. on Ion. Phenom. in Gases, North-Holland (1962) p. 1769.

4. L. M. Lidsky, et.al., J. Appl. Phys. 33, 2490 (1962).

5. L. V. Dubovoi, and P. G. Popov, Sov. Phys. JETP 22, 19 (1966).

6. T. Consoli, J. R. Geller, and R. LeGardeur, Proceedings of the 5th Conf. on Ion. Phenom. in Gases, North-Holland (1962) p. 1119.

7. N. Rynn, and N. D'Angelo, Rev. Sci. Instrum. 31, 1326 (1960).

8. E. B. Hooper, and O. Anderson, Lawrence Livermore Laboratory Report UCRL-76703 (1976).

9. J. N. Lafferty, J. Appl. Phys. 22, 229 (1951).

10. A. I. Herscovitch, and V. J. Kovarik, Rev. Sci. Instrum. 54, 328 (1983).

11. D. H. Birdsall, and D. E. Ping, Rev. Sci. Instrum. 36, 1777 (1965).

12. I. G.,Brown, Phys. Fluids 14, 1377 (1971).

13. Savas, S. E., Univ. of Calif. Ph.D. Thesis (1981); Lawrence Berkeley Laboratory Report LBL-12771.

14. M. Seidl, Phys. Fluids 13, 966 (1970).

15. Manickam, et.al., Phys. Fluids 18, 360 (1975).

Figure Captions

1. Plane view of discharge chamber and vacuum system.
2. Cut-away side view of anode, its support flange and gas valve.
3. Cathode assembly with heat shields demounted from the rest.
   A) Heat shields
   B) MGC insulator
   C) LaB_6 cathode
   D) Cathode supports
   E) Cathode heater filament
   F) Ta cathode holder
4. Plasma density profiles in horizontal (upper) and vertical directions gotten from Langmuir double probes.
5. Electron density and temperature dependences on controllable discharge parameters.
   A) V_{arc} = 2k, B = 1350 Gauss, Gas = 65 μL
   B) T_{cath} = 1550°C, B = 1350 Gauss, Gas = 65 μL
   C) T_{cath} = 1570°C, B = 1350 Gauss, V_{arc} = 2 kV
   D) T_{cath} = 1550°C, V_{arc} = 2 kV, Gas = 65 μL

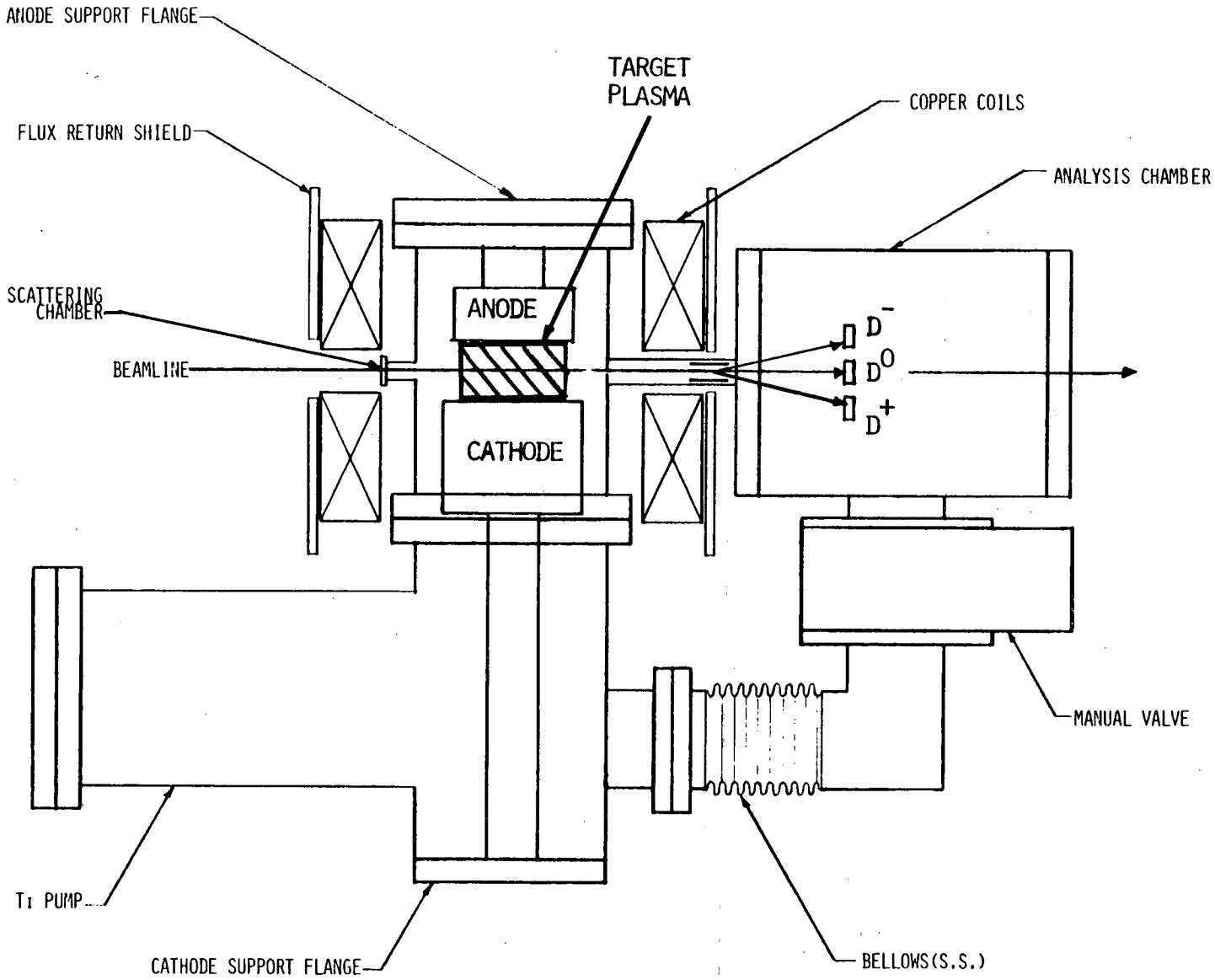

Vacuum System (TOP VIEW)

XBL 7910-12356A

Figure 1

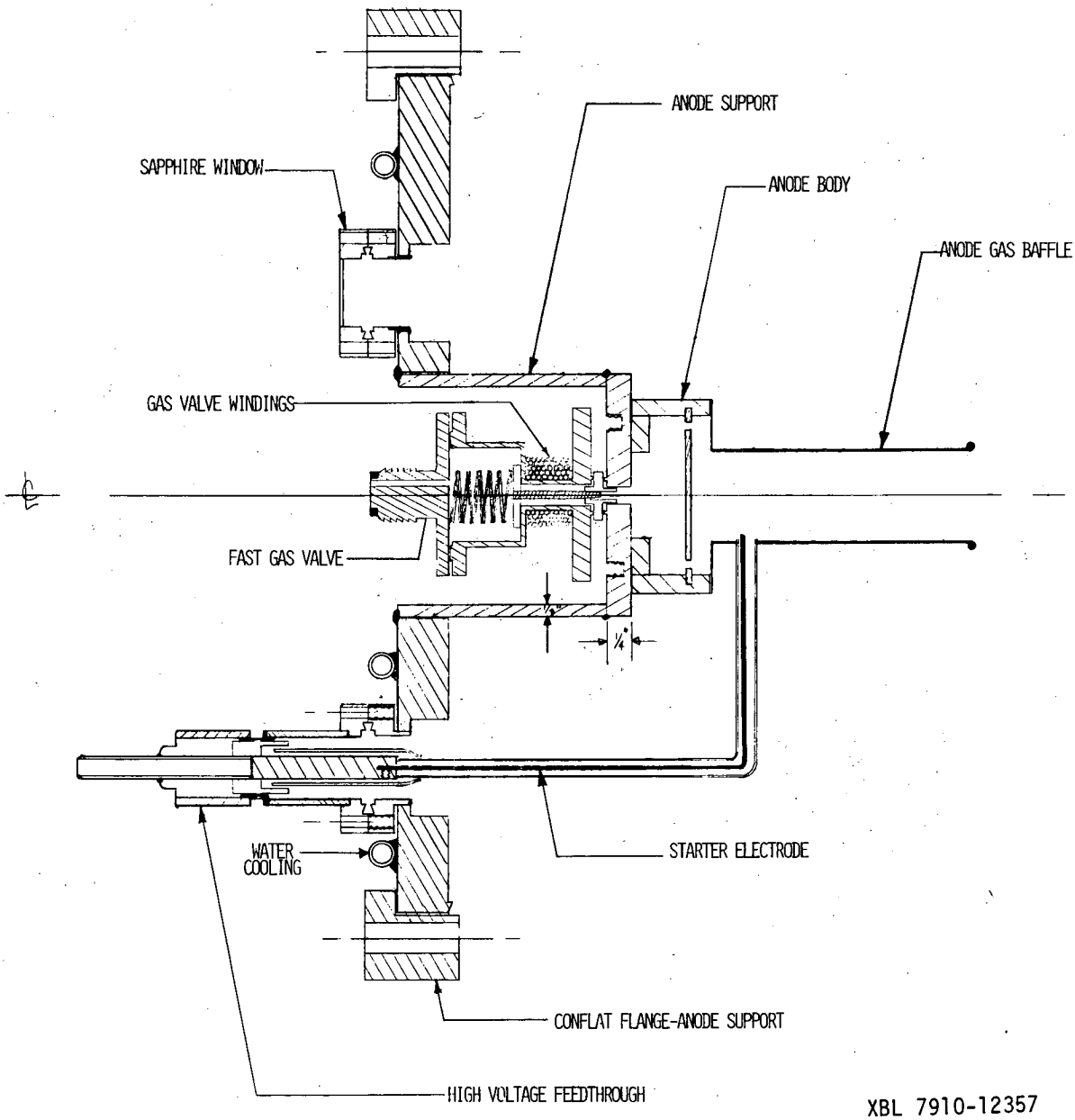
ANODE SUPPORT
SAPPHIRE WINDOW
ANODE BODY
ANODE GAS BAFFLE
GAS VALVE WINDINGS
FAST GAS VALVE
1/4"
WATER COOLING
STARTER ELECTRODE
CONFLAT FLANGE-ANODE SUPPORT
HIGH VOLTAGE FEEDTHROUGH
XBL 7910-12357

Figure 2

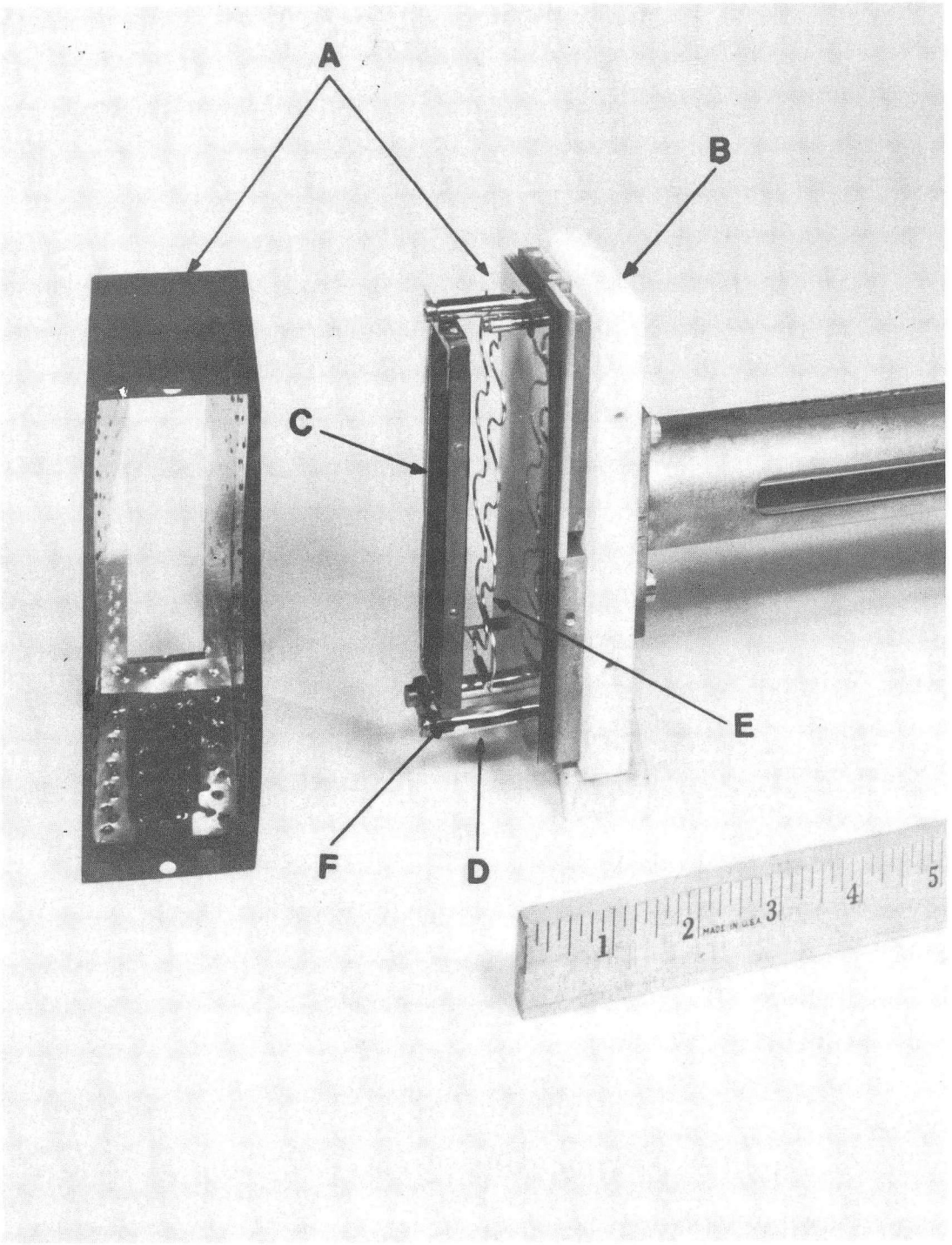

CBB 784-4047A

Figure 3

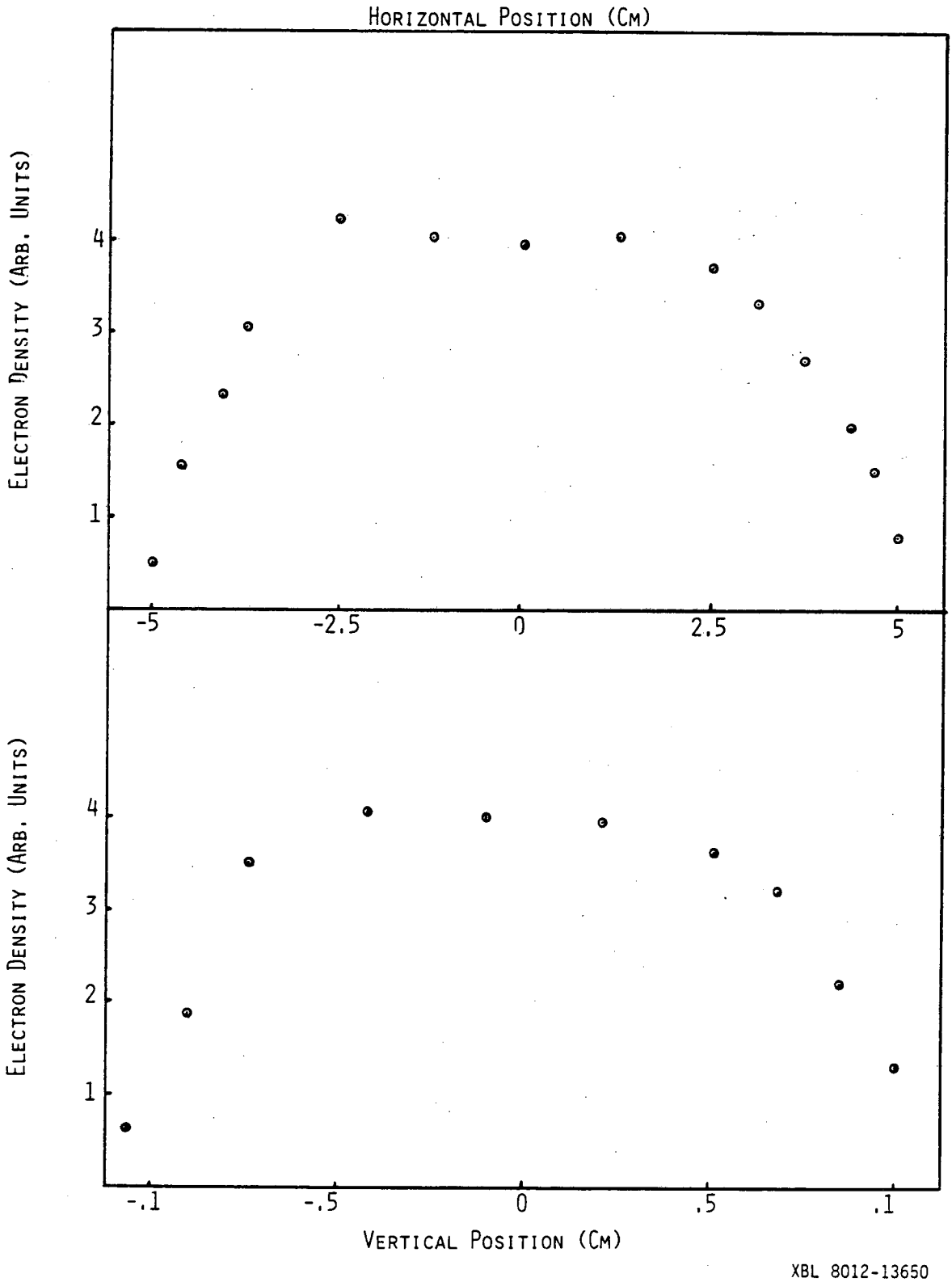

XBL 8012-13650

Figure 4

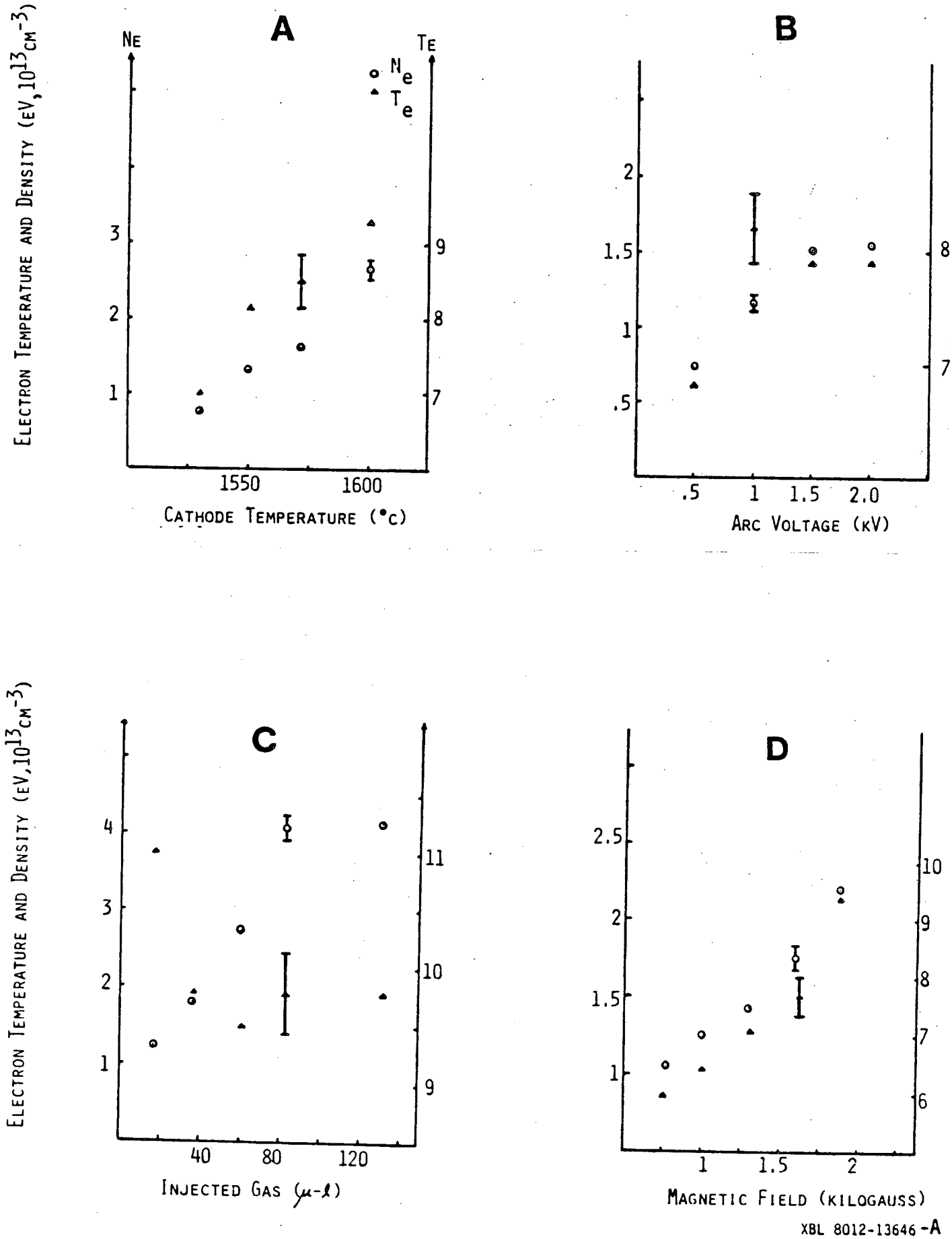
A
B
C
D
NE
TE
Ne
Te
ELECTRON TEMPERATURE AND DENSITY (eV, 10^13 cm^-3)
CATHODE TEMPERATURE (°C)
ARC VOLTAGE (kV)
INJECTED GAS (μ-ℓ)
MAGNETIC FIELD (KILOGAUSS)
XBL 8012-13646-A

Figure 5

This report was done with support from the Department of Energy. Any conclusions or opinions expressed in this report represent solely those of the author(s) and not necessarily those of The Regents of the University of California, the Lawrence Berkeley Laboratory or the Department of Energy.

Reference to a company or product name does not imply approval or recommendation of the product by the University of California or the U.S. Department of Energy to the exclusion of others that may be suitable.

TECHNICAL INFORMATION DEPARTMENT
LAWRENCE BERKELEY LABORATORY
UNIVERSITY OF CALIFORNIA
BERKELEY, CALIFORNIA 94720