LBL-15302
c.2

Lawrence Berkeley Laboratory

UNIVERSITY OF CALIFORNIA

RECEIVED
LAWRENCE
BERKELEY LABORATORY

FEB 9 1983

LIBRARY AND
DOCUMENTS SECTION

Accelerator & Fusion Research Division

Presented at the Beam Cooling Workshop, Physical Sciences Laboratory, University of Wisconsin-Madison, Stoughton, WI, September 9-11, 1982

ELECTRODES FOR STOCHASTIC COOLING OF THE FNAL ANTIPROTON SOURCE

Ferd Voelker

November 1982

TWO-WEEK LOAN COPY

This is a Library Circulating Copy which may be borrowed for two weeks. For a personal retention copy, call Tech. Info. Division, Ext. 6782.

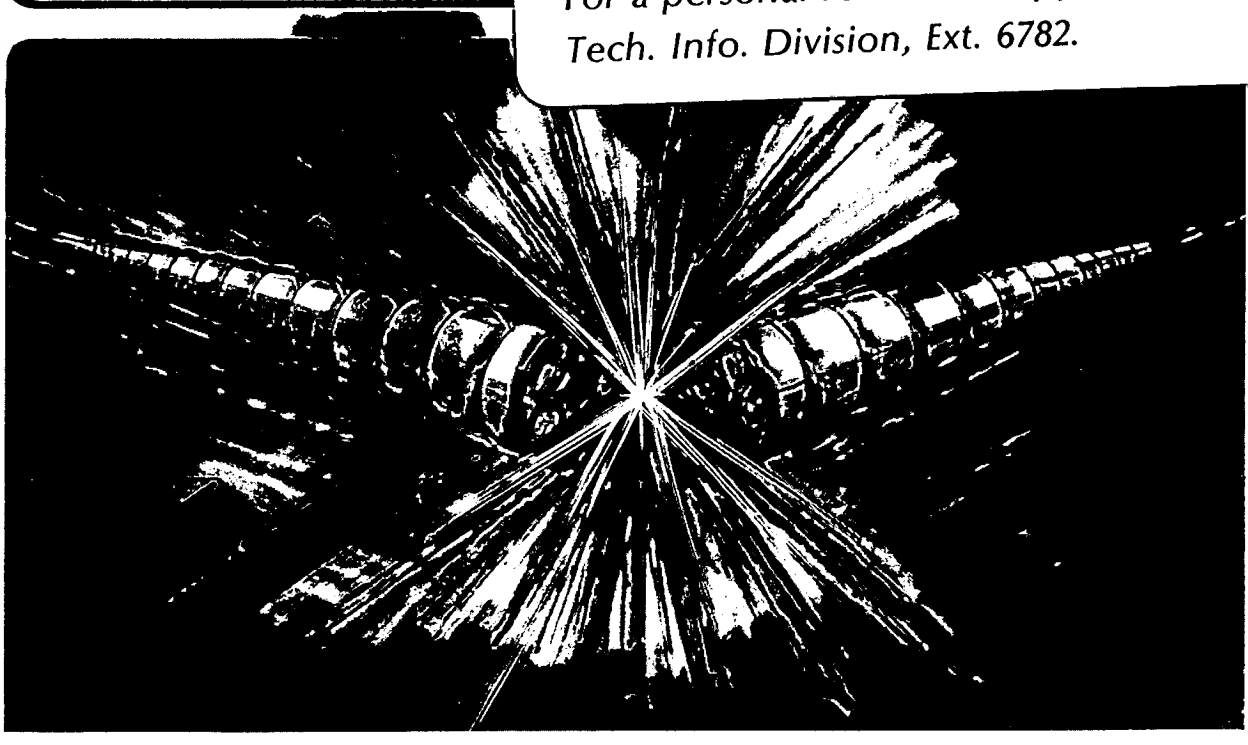

Prepared for the U.S. Department of Energy under Contract DE-AC03-76SF00098

LBL-15302
c.2

DISCLAIMER

This document was prepared as an account of work sponsored by the United States Government. While this document is believed to contain correct information, neither the United States Government nor any agency thereof, nor the Regents of the University of California, nor any of their employees, makes any warranty, express or implied, or assumes any legal responsibility for the accuracy, completeness, or usefulness of any information, apparatus, product, or process disclosed, or represents that its use would not infringe privately owned rights. Reference herein to any specific commercial product, process, or service by its trade name, trademark, manufacturer, or otherwise, does not necessarily constitute or imply its endorsement, recommendation, or favoring by the United States Government or any agency thereof, or the Regents of the University of California. The views and opinions of authors expressed herein do not necessarily state or reflect those of the United States Government or any agency thereof or the Regents of the University of California.

LBL-15302

ELECTRODES FOR STOCHASTIC COOLING OF THE FNAL ANTIPROTON SOURCE*

Ferd Voelker

November 1982

Accelerator and Fusion Research Division
Lawrence Berkeley Laboratory
University of California
Berkeley, California 94720

*This work was supported by the Director, Office of Energy Research, Office of High Energy and Nuclear Physics, High Energy Physics Division, U. S. Dept. of Energy, under Contract No. DE-AC03-76SF00098.

ELECTRODES FOR STOCHASTIC COOLING OF THE FNAL ANTIPROTRON SOURCE

Ferd Voelker
Lawrence Berkeley Laboratory
University of California, Berkeley

An electrode array for stochastic cooling is being developed for use on the FNAL antiprotron source. With minor power handling modifications, the same electrodes can function as pickups or as kickers. When used as pickups, a large array is needed to increase the signal-to-noise ratio.

Each electrode is one element of a pair of directional coupler loops that are mounted flush with the upper and lower walls of the beam chamber. The loops, fabricated from flat metal plates, are supported by specially shaped legs. The loops are mounted in rectangular cavities which have been milled in a metal bar as shown in figure 1 below.

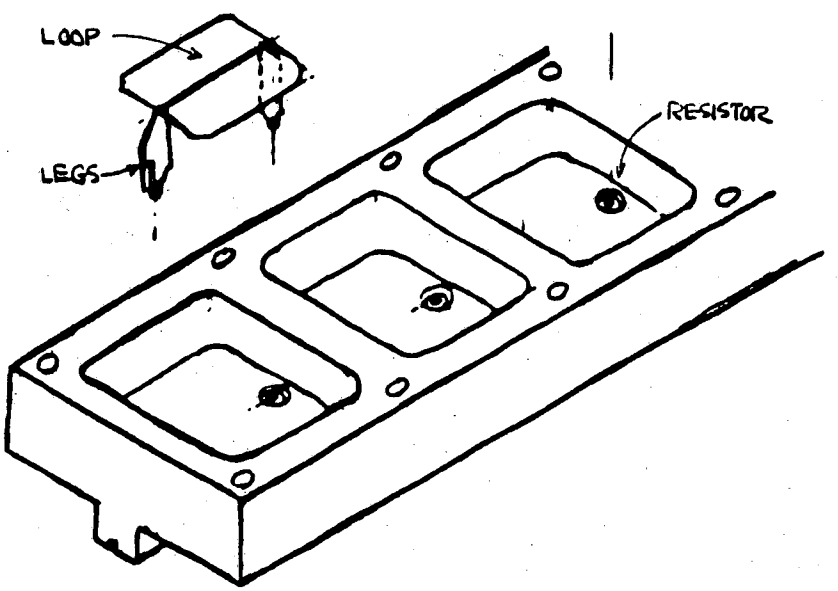

Figure 1

Two holes are drilled in the bottom of the cavity. One is tapped to take a screw-in fixture on to which is mounted a 100 ohm resistor. The resistor terminates in a pin that engages a socket in the leg of the loop. A circuit board behind the bar supports another pin passing through the second hole that engages a socket on the other leg of the loop. The hole and the pin make up a 100 ohm coaxial line. The loop and the metal cavity constitute a parallel plane transmission line with a characteristic impedance of approximately 100 ohms. The legs and the cavity wall form a section of transmission line that match the parallel plane line to the coaxial line and the resistor. A side-view cross section through the loops and cavities is exhibited in Figure 2.

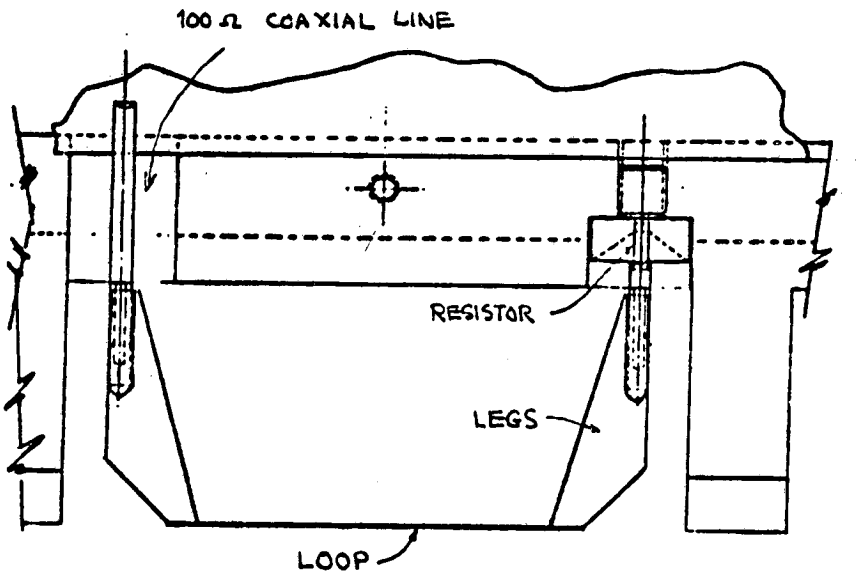

Figure 2

In figure 3, an end-view cross section through the loop and cavity is shown.

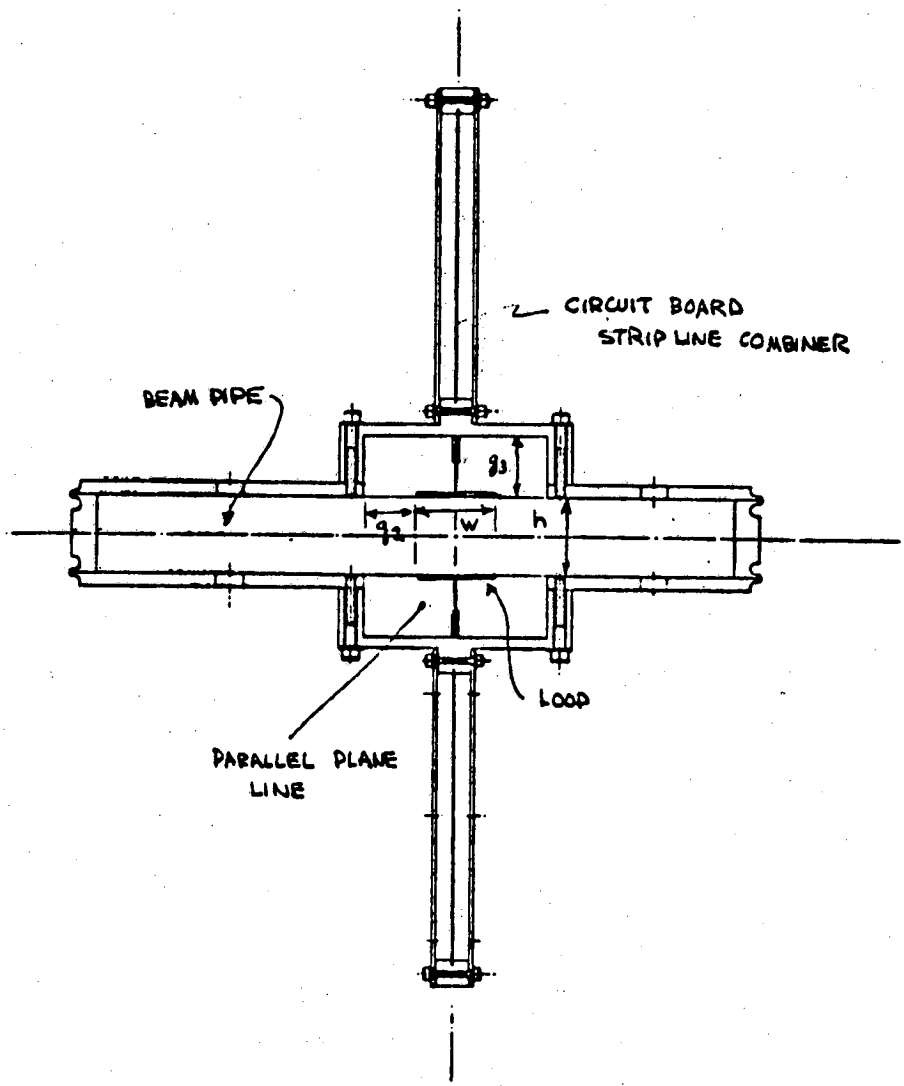

Figure 3

The characteristic impedance of the parallel plane line is a function of the loop width and the clearances to the cavity walls, shown in the equation below.

$$Z_L \approx \frac{120\pi}{\frac{w+g_2}{g_3} + \frac{g_3}{g_2}}$$

Figure 4 shows how the characteristic impedance varies with clearance for the special case with equal clearances and a width of 3 cm.

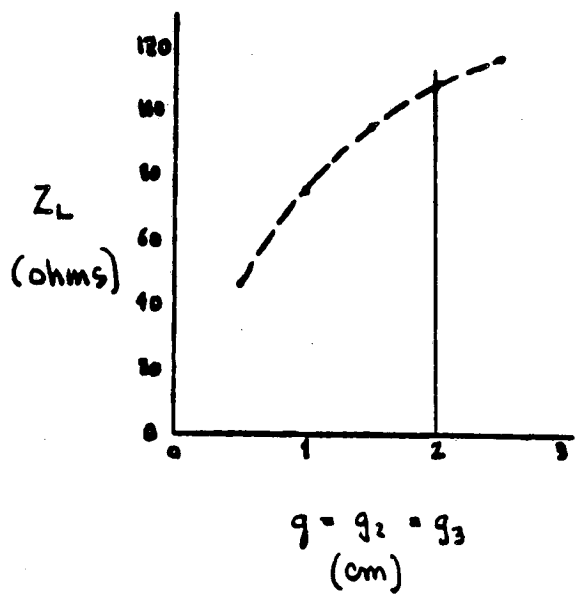

Figure 4

An impedance of about 100 ohms is convenient because 100 ohm resistors were used, and 100 ohms is the impedance of the strip line that connects other loops in the array.

Figure 5 shows a curve of the sensitivity factor F as a function of the geometry.

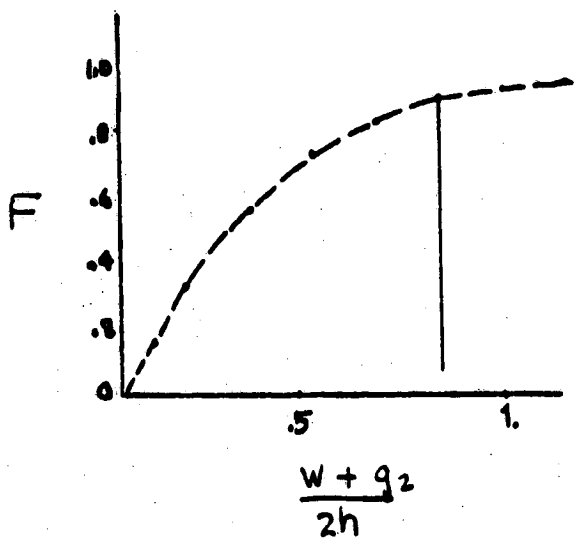

$$F = \frac{2}{\pi} \tan^{-1} \sinh\left(\pi \frac{W+g_2}{2h}\right)$$

Figure 5

Operation is near the asymptotic value at F = 0.9. A figure of merit, $V/i = (Z_L \times 100)^{1/2} \times F/2$ is defined as the ratio of voltage delivered to a 50 ohm transmission line from a pair of loops when a current of "i" flows in the center of the loop pair. The calculated value is about 45 ohms.

Figure 6 shows the value, V/i, measured by passing current (through a 0.05" diameter wire) as a function of sideways displacement from the center line.

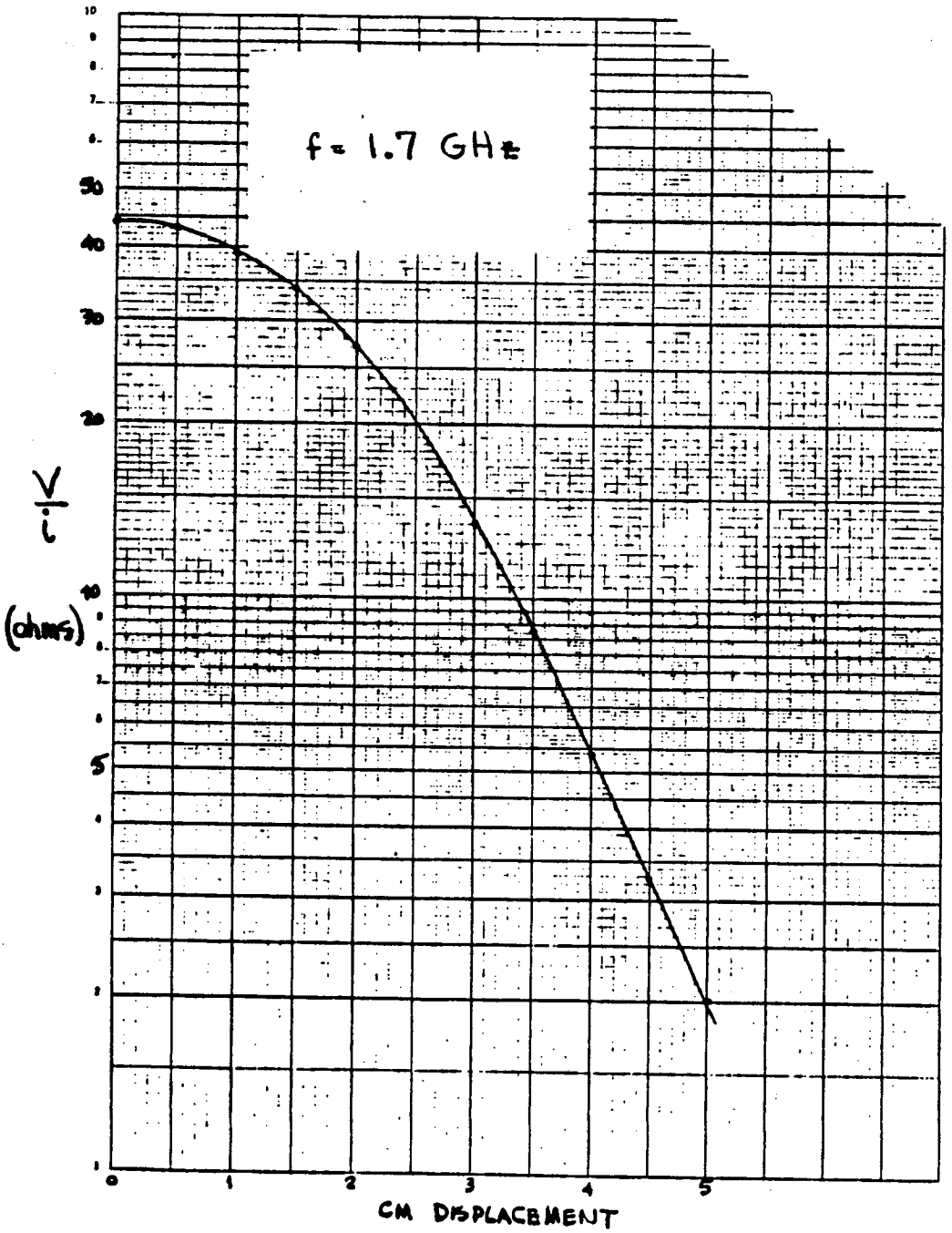

Figure 6

A printed circuit board supports the center conductors of a strip line network with various impedances and lengths. Metal plates on either side of the circuit board serve as the ground planes. Figure 7 is an exploded view of the beam pipe and combiners.

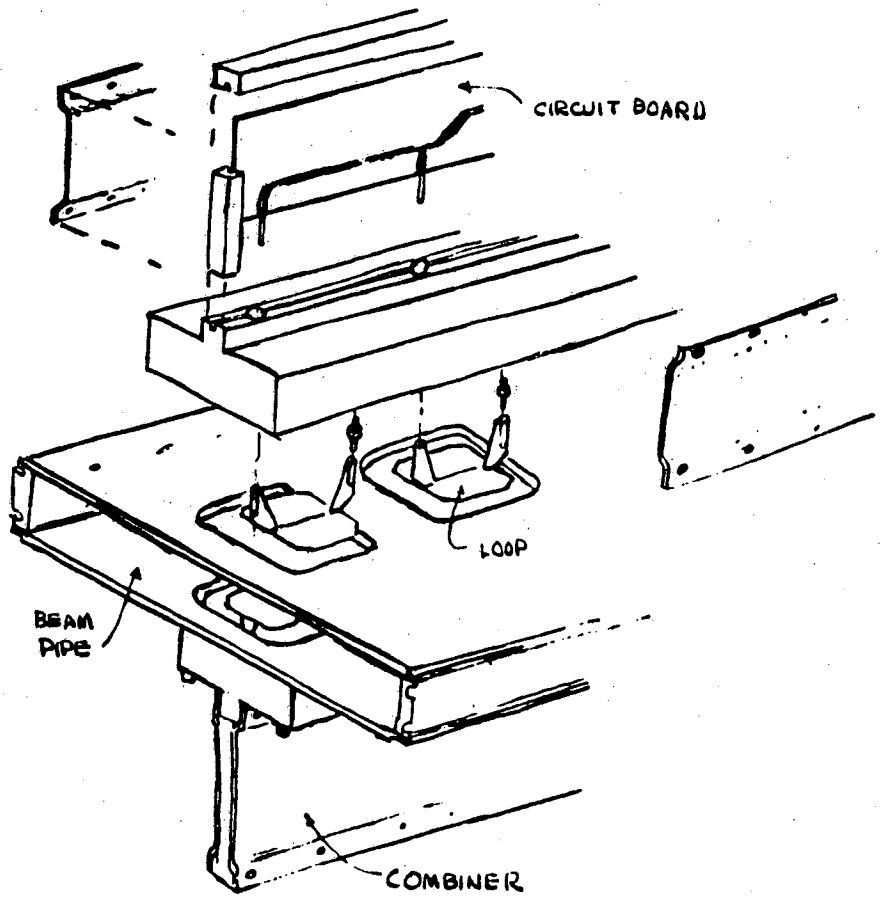

Figure 7

This network combines the signals from sixteen loops and delivers them to a 50 ohm connector at the end of the combiner. Each loop terminates in a section of 100 ohm strip line which is paralleled with another to give a 50 ohm signal source. (See figure 8.)

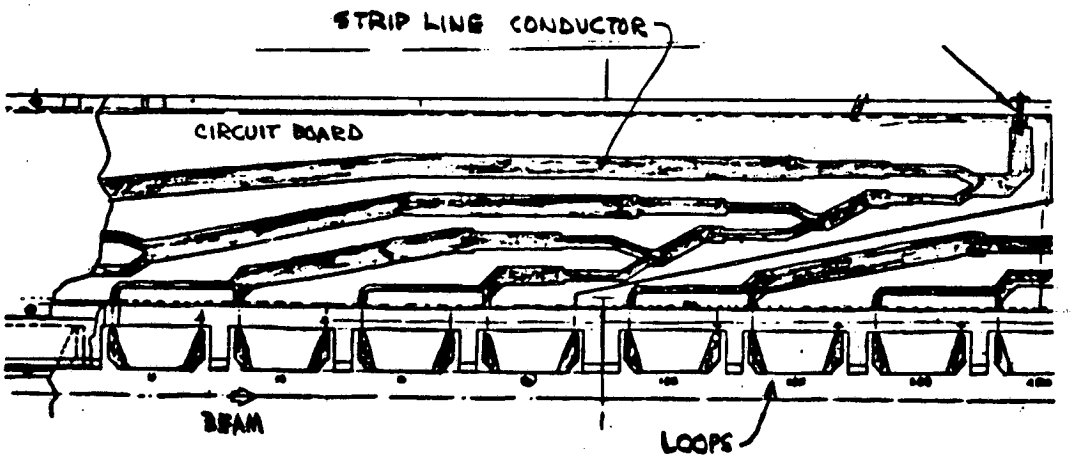

Figure 8

Two sections of quarter wave strip line, of suitable impedance, function as a broad band impedance transformer bringing the impedance level back to 100 ohms. Two of these outputs are again paralleled. This process is repeated until sixteen signals have been combined.

When used as pickups, the electrode array will be cooled to 80 degrees Kelvin. This serves two purposes: the organic materials in the circuit board will have almost no outgassing at this temperature, allowing a very high vacuum to be obtained in the beam pipe; the noise temperature of the resistors in the loops will be reduced. Because the signals are very small, the signal-to-noise ratio determines the number of loops needed in an array. For 3×10^7 antiprotons injected, a 1 GHz bandwidth, for an array of 256 pickup pairs, and for a temperature of 80 degrees Kelvin on the pickups, the signal to noise ratio is about 5 to 1.

Measurements of V/i made as a function of frequency indicate that a single loop pair measured with current through a wire behave substantially as calculated. Figure 9 shows a measured curve of V/i vs frequency obtained by a Fourier Transform of a pulse response. Measurements made with a network analyzer are similar but show sharp resonances around 2.5 Ghz and 3.5 Ghz. This particular pickup was designed for 1 to 2 GHz, and is peaked at 1.67 GHz to optimize the signal that can be obtained per meter of array. Because a wire can support additional modes in the beam pipe, we are not sure that measurements made with a wire will allow us to predict correctly the behavior of such an array with a particle beam. For this reason, and because energy is extracted from a wire by the pickups, it will be necessary to test a pickup array with a relativisitic beam of particles.

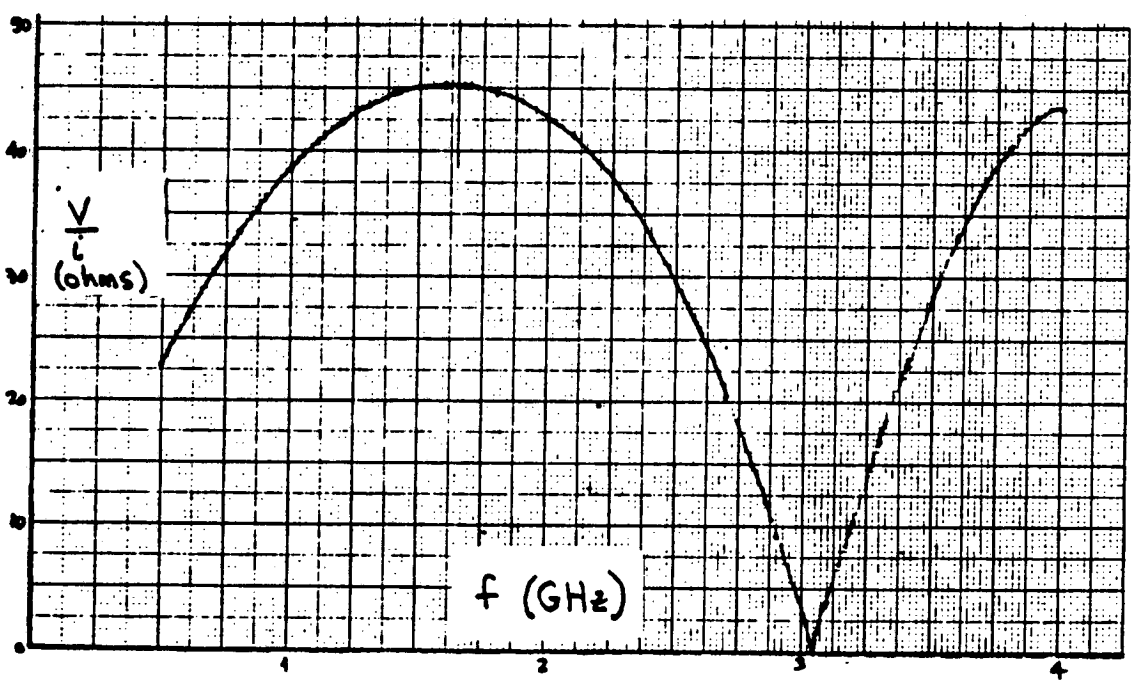

Figure 9

An array comprising sixteen loop pairs and combiner boards mounted in a full size (3 cm x 25 cm) beam pipe is being constructed at LBL, and is expected it to be ready for testing in the middle of December 1982. This array will be tested with a modulated beam of relativistic electrons from a 2 MV Van de Graaf at Berkeley. Later it will be tested at Argonne National Lab with a pulsed beam of 20 Mev electrons from a linac.

This device is the joint effort of a number of people; principally W. S. Flood, J. Johnson, and T. Henderson. This work was supported by the Director, Office of Energy Research, Office of High Energy and Nuclear Physics, High Energy Physics Division of the U. S. Department of Energy under Contract No. DE-AC03-76SF00098.

This report was done with support from the Department of Energy. Any conclusions or opinions expressed in this report represent solely those of the author(s) and not necessarily those of The Regents of the University of California, the Lawrence Berkeley Laboratory or the Department of Energy.

Reference to a company or product name does not imply approval or recommendation of the product by the University of California or the U.S. Department of Energy to the exclusion of others that may be suitable.

TECHNICAL INFORMATION DEPARTMENT
LAWRENCE BERKELEY LABORATORY
UNIVERSITY OF CALIFORNIA
BERKELEY, CALIFORNIA 94720