Submitted to Journal of Chemical Physics

RECEIVED
LAWRENCE
RADIATION LABORATORY

LBL-1540
Preprint

LIBRARY AND
DOCUMENTS SECTION

SURFACE STATES IN ZnO STUDIED BY ELECTROCHEMICAL AND MICROWAVE TECHNIQUES

Roberto Bogomolni, Helmut Tributsch, Günter Petermann
and Melvin P. Klein

December 1972

Prepared for the U. S. Atomic Energy Commission
under Contract W-7405-ENG-48

For Reference

Not to be taken from this room

LBL-1540
c.1

DISCLAIMER

This document was prepared as an account of work sponsored by the United States Government. While this document is believed to contain correct information, neither the United States Government nor any agency thereof, nor the Regents of the University of California, nor any of their employees, makes any warranty, express or implied, or assumes any legal responsibility for the accuracy, completeness, or usefulness of any information, apparatus, product, or process disclosed, or represents that its use would not infringe privately owned rights. Reference herein to any specific commercial product, process, or service by its trade name, trademark, manufacturer, or otherwise, does not necessarily constitute or imply its endorsement, recommendation, or favoring by the United States Government or any agency thereof, or the Regents of the University of California. The views and opinions of authors expressed herein do not necessarily state or reflect those of the United States Government or any agency thereof or the Regents of the University of California.

0 0 0 0 3 9 0 0 0 3 8

Surface States in ZnO Studied by Electrochemical and Microwave Techniques

ROBERTO BOGOMOLNI,* HELMUT TRIBUTSCH,** GÜNTER PETERMANN***
AND MELVIN P. KLEIN
Laboratory of Chemical Biodynamics, Lawrence Berkeley Laboratory,
University of California, Berkeley, California 94720, U.S.A.

ABSTRACT

Electrochemical and microwave techniques have been combined for the study of electrical properties of Zinc oxide. The arrangement of an electrochemical cell in the microwave cavity is described.

The dependence of the microwave absorption at negative potentials could be related to similar changes in the dark current of the ZnO; they are attributed to reduction and reoxidation of ZnO.

A potential dependent photoinduced microwave absorption was found; it reached its maximal value at zero or small positive voltages and decreased with higher positive potentials following a complementary behavior with respect to the increasing photocurrent. The wavelength dependence of the microwave effect showed some absorption in the long wavelength tail of the band edge. This absorption remained even after applying a positive voltage, while the microwave absorption at wavelengths shorter than the band edge disappeared completely with sufficiently high voltages. This disappearance is explained in terms of a competitive reaction between the photocurrent and the microwave absorption in the surface (space charge layer), while the remaining peak is attributed to bulk absorption.

It is suggested that this effect may be used to distinguish between

bulk and surface reactions. Further comparative studies could lead to the development of electrochemical investigations by microwave methods, which would have the advantage of an electrodeless arrangement.

During investigations of the dark and photo-conductivity of biological systems at microwave frequencies, it was desirable to compare the biological systems with a model system to explain the results found. ZnO was chosen as a reference since its electrical properties at DC and low frequencies were already well established, so that inferences of its behavior at microwave frequencies could be drawn. During these comparative studies of the biological and ZnO systems the observations reported in this paper were made.[†]

INTRODUCTION

Electrochemical and catalytic properties of solid state surfaces are, to a considerable extent, determined by reactions of semi-free electrons and of electric dipoles. The classical technique for the investigation of these reactions is the electrochemical method in which currents across electrode-solution interfaces are analyzed. It has proved to be extremely useful, and is widely applied in research. However, the limitations of electrochemical techniques have also become apparent: Electrochemical data are sometimes lacking in specificity and an increasing number of investigators have begun to combine electrochemical measurements with other techniques (electro reflectance,[1] paramagnetic resonance,[2] fluorescence,[3] infrared spectroscopy[4]) which supplement electrochemical information. Moreover, the need for good electric contacts, for their isolation from the electrolyte, for sufficient conductivity as well as

the need for macroscopic samples, excludes many inorganic and especially organic materials from electrochemical investigations.

This problem could be circumvented were it possible to study electrochemical reactions without electrodes and without a continuous electric current across the samples. A modest attempt into this direction led us to investigate the applicability of microwave absorption techniques to the study of electrons and dipoles in electrode surfaces. Since electrons can be accelerated and electric dipoles oriented by the electric field of microwaves (3 cm), there should be a clear change in absorption whenever there is a turnover of electrons or dipoles or whenever other parameters (mobilities of electrons, and/or holes or the environment of dipoles) change.

In order to test the applicability of microwaves to the investigation of electrochemical reactions, an attempt has been made to combine the electrochemical technique and the microwave absorption technique.

Since surface reactions are limited to very thin layers, a means had to be devised to separate surface from bulk effects. This separation of surface effects from bulk effects could be achieved by variation of the electric field across the interface of the electrode. Since the electric field in a sufficiently conducting electrode is localized across a very thin section in the surface (across the space charge layer and the Helmholtz layer in semiconductors, or across the Helmholtz layer in a metal), surface reactions could be separated easily by observing field dependent changes of microwave absorption. Surface reactions should therefore be observable by a lock-in technique, in which the electrode potential is modulated periodically.

EXPERIMENTAL SECTION

Our project was faced with a series of difficult experimental problems: one of them results from the introduction of water into the microwave cavity. For optimal detection of microwave absorption due to charge carriers, the surface of the electrode must be placed in a resonator at a site of maximal electric field. Since we wished to investigate an electrode in contact with an aqueous electrolyte, and since water strongly absorbs microwaves, we were obliged to abandon this arrangement and seek a compromise solution. We found it in the TE_{011} cylindrical cavity resonator which is depicted in Fig. 1. This resonator, which had a typical resonance frequency of 9.5×10^9 Hz, had openings into cylindrical chimneys in which the electric field decays exponentially (a waveguide beyond cutoff). We constructed a small cylindrical electrochemical cell, consisting of the sample electrode, the aqueous electrolyte and a counter electrode, which fitted into this chimney. The position of the electrode surface was adjustable within the electric field of the cavity resonator. The geometry for the arrangement of the metal wires of the electrochemical cell was chosen so that they did not act as antennae for the coupling of microwaves from the cavity.

For the microwave experiments single crystals of zinc oxide (10^{-2} to $10^{-3}\,\Omega^{-1}\,cm^{-1}$) were selected.[5] Hexagonal discs 2-4 mm thick were cleaved from single crystals several cm in length and a few mm in diameter and prepared as electrodes. Ohmic contact was made by diffusion of indium into one surface (1 h, 700°C). The surface, which was exposed to the electrolyte, was produced by cleaving the contacted crystal with a blade. The counter electrode was a platinum wire. Although not ideal, Pt has

been used as a reference electrode because of the small size of the electrochemical cell (two-electrode arrangement). Aqueous 1 M KCl solution was used as the electrolyte. Addition of HCl brought the pH to 2. Electrode potentials were controlled with a Wenking fast rise potentiostat.

Fig. 2 shows a scheme of the complete microwave-generation and -detection system, together with the electrochemical set-up. The microwave bridge consisted of a circulator. Microwave power was generated by an L.F.E. ultrastable X-band oscillator. The power reflected by the TE_{011} cylindrical cavity was sent to a superheterodyne receiver. The frequency of the oscillator was automatically adjusted to the cavity frequency by a conventional servo mechanism. A fraction of the power provided by the main oscillator was directed to a bucking arm, which was also used as a reference for relative power measurements. The local oscillator was automatically tuned 60 MHz above the main oscillator by a servo mechanism. The receiver used a 60 MHz LEL balanced mixer-amplifier. The resultant 60 MHz signal was sent to a dual phase-sensitive detector. A fraction of the microwave power provided by the two oscillators was directed to a second balanced mixer in order to obtain a coherent reference voltage for the 60 MHz phase sensitive detector. The phase of the reference voltage was adjusted by a microwave phase shifter at the main oscillator input on the second mixer. The microwave system used corresponds in principle to that described in ref. 6.

The sensitivity of microwave detection was further increased by means of periodic modulation of microwave absorption by periodic modulation of the electrode potential or by periodic illumination. In these cases lock-in techniques could be applied.

RESULTS

A. Potential Dependence of Microwave Absorption

When a periodic electric potential was applied to the zinc oxide electrode, a synchronous modulation of microwave absorption could be observed. The microwave absorption changes resulting from variations of the electrode potential were so pronounced that they could be measured conveniently in a quasi stationary way. Fig. 3 depicts the dependence of microwave absorption on the electrode potential for two different rates of potential change. A clear hysteresis can be observed which is more pronounced in the slower dynamic measurement.

This behavior may best be described by comparison with a current-voltage diagram for the same electrode (Fig. 4): When the electrode potential is changed towards negative value (the ZnO is negative with respect to the electrolyte), microwave absorption increases considerably and traverses a maximum. The electrode behavior in this potential range is characterized by hydrogen evolution and by a partial reduction of the zinc oxide to zinc (cathodic current in Fig. 4). When the potential changes are reversed, the electrode surface is reoxidized. This is reflected in an anodic current peak which is higher and apparently shifted towards more positive potentials after prolonged cathodic reduction. The reoxidation process of the electrode surface seems to be reflected in the second microwave absorption peak, which occurs during the transition from negative to positive electrode potentials. At sufficiently high anodic potentials, finally, current flow is limited by a boundary-layer in the n-type semiconductor surface. Microwave absorption in this region reaches a constant value.

B. Microwave Photoeffect

Illumination of the zinc oxide electrode gives rise to an anodic photocurrent, which shows a limiting behavior at positive potentials (Fig. 4 and 5b). It arises from the generation of holes in the valence band of the semiconductor. Holes are minority carriers in this n-type material and initiate electrochemical reactions at the semiconductor surface which lead to its photocorrosion.

There is also a light-induced microwave absorption with and without applied voltage. The magnitude of the photoinduced microwave absorption is small compared with the dark microwave absorption and, as can be seen in Fig. 3a, the photoinduced effects can be elicited only over a limited voltage range. Fig. 5 shows a very close relationship between simultaneously measured photocurrent and photoinduced microwave absorption: the rise of the DC photocurrent is accompanied by a drop of the microwave absorption. A very similar behavior was found by Petermann et al.[3] in luminescence studies of the same system. The voltage at which the microwave absorption maximizes is different for different crystals and also depends on the pre-treatment of the surface.

Before addition of the electrolyte the ZnO crystals in contact with air showed microwave photoconductivity when illuminated. The transient changes in microwave absorption due to the photocarriers were as fast as the light pulses. When electrolyte was added (no electric field applied), a 20- to 40-fold increase in the microwave photoeffect was observed. The kinetics of the transients showed also a marked change; the rise as well as the decay times were in this case of several milliseconds as compared to microsecond responses of the dry crystal. The application of positive

voltages further slowed the time response, as can be seen in Fig. 6.

The spectral dependence of the microwave photoeffect is depicted in Fig. 7. There is a potential dependent component which coincides with the photocurrent spectrum of the electrode. There is also a potential independent microwave effect at slightly longer wavelengths, which does not appear in the photocurrent spectrum. This has also been found in luminescence studies.[3]

DISCUSSION

The propagation of electromagnetic radiation through a conducting medium is characterized by a complex dielectric constant:

$$\varepsilon = \frac{1}{\mu}\left(\frac{c\ k}{\omega}\right)^2 = \varepsilon' + i\varepsilon''$$

where k is the wave vector, ω the frequency, μ the permittivity, and c the light velocity. The real part is related to the wave velocity of the radiation through the medium. The imaginary part reflects the losses due to all mechanisms which contribute to the conductivity at the applied frequency. At microwave frequencies (wavelength of microwaves in our experiments approximately 3 cm) the absorption losses in a solid state material arise mainly from semi-free electrons and holes in the bands as well as from dipoles. This dipole absorption may result from the special composition of the material, especially also from imperfections in single crystals and from surface states as well as from surface dipole layers.

The demonstration of a pronounced potential dependence of microwave absorption in a zinc oxide electrode is clear evidence for the applicability of microwave studies to surface problems. The potential applied to this material drops practically completely within the space charge layer (order of magnitude at potentials used: 10^{-5} cm) and the

Helmholtz layer on the surface. Since the microwave absorption measurement represents an integration of dielectric losses in the microwave cavity, potential induced absorption changes reflect changes in the quantity and quality of energy absorbing reactants: these include changes in number and mobility of semi-free electrons and holes in the space charge layer and of ions in the electrolyte, and changes in number, quality and environment of dipoles. The information obtained from microwave absorption experiments is therefore implicitly related to electrochemical quantities such as electrode currents, surface double layers, chemical turnovers, and should also give information about the dynamics of events within the space charge layer during potential changes.

The following relations show the correlations between potential dependency of microwave absorption and electrochemical reactions:

Microwave absorption is dependent on (1) the number of positive and negative semi-free charges in the electrode ($n\pm$) and their mobilities ($\mu\pm$), (2) on the number of dipoles in the semiconductor, the Helmholtz layer and in the electrolyte (d_{SC}, d_{HL}, d_{EL}), (3) on the number of positive and negative ions ($i\pm$) in the electrolyte and their mobilities ($\mu_i\pm$).

$$M = M(n\pm, \mu\pm, d_{SC}, d_{HL}, d_{EL}, i\pm, \mu_i\pm) \qquad (1)$$

Differentiation of the microwave absorption function with respect to the electrode-potential leads to:

$$\frac{dM}{dV} = \frac{\partial M}{\partial n\pm}\left(\frac{dn\pm}{dV}\right) + \frac{\partial M}{\partial \mu\pm}\left(\frac{d\mu\pm}{dV}\right) + \frac{\partial M}{\partial d}\left(\frac{dd_{SC}}{dV} + \frac{dd_{HL}}{dV} + \frac{dd_{EL}}{dV}\right) + \frac{\partial M}{\partial i\pm}\left(\frac{di\pm}{dV}\right) + \frac{\partial M}{\partial \mu_i\pm}\left(\frac{d\mu_i}{dV}\right) \qquad (2)$$

The bracketed derivatives express the potential dependent changes in the number of charge carriers and their mobilities in the space charge layer

of the electrode (electrons and holes) and in the electrolyte (ions) as well as number and quality of dipoles in the electrode, Helmholtz layer and electrolyte. These factors also determine the proceeding of electrochemical reactions and are ingredients of theoretical electrochemical calculations. They can consequently be expressed in terms of electrochemical quantities like potential dependencies of electrode currents, space charge- and Helmholtz-capacitances and conductivities (for many cases most of these derivatives are negligible). The remaining derivatives on the right side of relation (2) (not in brackets) are accessible from the theory of the absorption of microwaves by semi-free carriers and dipoles. Consequently, a direct comparison between potential-dependencies of microwave absorption and electrochemical quantities appears to be possible. Microwave experiments could substitute for electrochemical measurements in cases in which electrochemical techniques are less favorable. The microwave absorption technique provides, in addition, a series of possibilities which could be applied to the investigation of electrochemical reactions:

a) Measurements of the frequency dependence of microwave absorption could provide a spectroscopic tool for electrochemical investigations.

b) Measurements of both, microwave absorption, ε'', and the real part of the dielectric constant, ε', which is possible with the same apparatus, using the dual phase detector, could provide insight into relaxation times of electrochemical reactions.

c) Measurements of the Faraday rotation Hall effect at microwave frequencies would allow a separation of microwave absorption caused by semi-free carriers and by dipoles, respectively.

At this very early stage of development of the microwave absorption method, it appears overly ambitious to attempt a detailed interpretation of electrochemical data. Much more research will be needed to provide a solid basis for quantitative investigation. Some qualitative conclusions, however, can be drawn from our experiments with zinc oxide electrodes: Towards negative (cathodic) electrode potentials there is an increasing number of electrons in the space charge layer of the electrode and the onset of hydrogen evolution, and reduction of zinc oxide to zinc on the electrode surface, which is reflected in a cathodic current (Fig. 4). Concurrently, there is a strong increase of microwave absorption (Fig. 3). These processes change the properties of the electrode surface; a consequence of this might be the reversal of a maximum of microwave absorption at sufficiently negative electrode potentials. When the potential change is reversed, hydrogen evolution decreases and the anodic electrode current peak (dashed in Fig. 4) evidently arises from the reoxidation of the zinc atoms on the electrode surface, which have been generated at more negative potentials. This potential dependent restoration of the original electrode surface is reflected in the second microwave absorption peak. At a sufficiently positive potential the original behavior of the electrode surface is reestablished. The proposed interpretation is supported by the observation that there is an increased microwave absorption change when the rate of the potential change is smaller. In this case there is more time for cathodic reduction at negative potentials and more time is needed for its anodic restoration. At positive potentials there is a depletion of electrons in the semiconductor surface. In this region a microwave photoeffect is visible (Figs. 3a, 5a). The relaxation time

of the photoeffect is of the order of 10^{-2} sec (Fig. 6). A potential dependent and a potential independent microwave component can be separated (Fig. 7). For a qualitative understanding of this photo-microwave absorption behavior it is useful to recall that the microwave absorption by light-generated electrons and holes will occur over the whole bulk of the crystal, while the electric field will influence these charge carriers only in the space charge layer. With deeply penetrating light, e.g., light of wavelengths slightly longer than the band edge, the electrons and holes will be generated all over the bulk and give a reasonable amplitude of microwave absorption while the photocurrent is negligibly small. (Further details see in Ref. 3.)

The reduction of the microwave losses under the influence of the positive voltage, which leads to the generation of the photocurrent, is probably the result of a different contribution of the charge carriers to the two phenomena. The photoinduced microwave absorption will be determined by the number of carriers, their mobilities, and their lifetimes. An electron, for example, with a lifetime of 10^{-3} sec will contribute 10^{4} times more to microwave absorption than one with a lifetime of 10^{-7} sec. Consequently slow states are the principal contributors to light-induced microwave absorption. This is clearly visible upon the addition of electrolyte, where the magnitude of the effect increases as do rise and decay times. This observation also indicates that the surface conditions considerably influence the microwave effect. Assuming that the charge carriers are captured much faster by the electric field, which is indicated by the faster onset of the photocurrent, the photoinduced microwave absorption will disappear with sufficiently high voltages.

ACKNOWLEDGMENTS

Two of the authors are grateful for the grant of fellowships by the Deutsche Forschungsgemeinschaft (H.T.) and the Max Kade Foundation, New York (G.P.). This work was supported, in part, by the U. S. Atomic Energy Commission.

REFERENCES

*Present address: Cardiovascular Research Inst., School of Medicine, University of California, San Francisco, California 94122.

**Present address: Laboratorio de Fisiologia Celular, Universidad de Chile, Vina del Mar, Chile.

***Present address: Inst. f. Physik. Chemie, Universität Düsseldorf, 4 Düsseldorf, W. Germany

†This work was performed in partial satisfaction of the Ph.D. requirements of RB at the University of California, Berkeley, and is contained in that dissertation, LBL-1036.

[1]B. Hoffmann, Z. Physik 219, 354 (1969).

[2]G. Feher, Phys. Rev. 114, 1219 (1959); G. K. Walters, J. Phys. Chem. Solids 14, 43 (1960).

[3]G. Petermann, H. Tributsch, R. Bogomolni, J. Chem. Phys. 57, 1026 (1972).

[4]N. J. Harrick, Ann. N. Y. Acad. Sci. 101, 928 (1963); N. J. Harrick, Phys. Rev. 125, 1165 (1962).

[5]We are indebted to Prof. Dr. G. Heiland, Technische Universitaet, Aachen, Germany, for his generous gift of single crystals.

[6]B. Leskovar, R. Bogomolni, M. P. Klein, in preparation.

FIGURE CAPTIONS

Figure 1. The microwave cavity and electrochemical cell.
1: TE_{011} cylindrical cavity. 2: Waveguide. 3: Waveguide beyond cutoff. 4: Cylindrical quartz cell. 5: ZnO crystal. 6: Electrolyte. 7: Platinum counter electrode. 8: Connecting wire. 9: light pipe.

Figure 2. Scheme of the experimental arrangement (see text).
V indicates a lock-in voltmeter, Model 131, Brower Lab., Inc., Westboro, Mass. I is an electrometer, Keithley Model 610 A.

Figure 3. Microwave absorption vs. electrode potential.
ZnO electrode, KCl 1 M electrolyte, pH 2. The absorption of microwave power is shown in arbitrary units; the electrode potential is given in volts. The arrows indicate the direction of sweep. a) shows the effect of voltage on the dark microwave absorption, and the region where the photoeffect was found. b) slower sweep rate. The vertical axis scale was reduced 4 times. Only dark absorption is shown.

Figure 4. Solid line: Illumination of the zinc oxide electrode gives rise to an anodic photocurrent, which shows a limiting behavior at positive potentials. It arises from the generation of holes in the valence band of the semiconductor. Holes are minority carriers in this n-type material and initiate electrochemical reactions at the semiconductor surface which lead to its photocorrosion, i.e., Zn^{++} ions dissolve into the solution. At negative potentials Zn^{++} is reduced to metallic Zn°. The broken line shows the effect of reoxidation of Zn° on the current

FIGURE CAPTIONS (Cont.)

when the electrode returns to positive potentials. 1: Shows the effect of a 56 mV/sec sweep rate. 2: Sweep rate 11 mV/sec.

Figure 5. ZnO-KCl electrolyte system. a) Light-induced microwave absorption in arbitrary units, as measured at the output of a lock-in amplifier; modulation frequency 10 Hz. b) Simultaneous recording of the DC photocurrents as obtained from the output of a second lock-in amplifier. Exciting wavelength: 360 nm.

Figure 6. ZnO-KCl electrolyte system. Effect of the electrode potential on the kinetics of the light-induced effect. The signal at +2 volts was several times larger than at 0 volt. The heights were equalized for better comparison of the kinetics.

Figure 7. Wavelengths dependence of light-induced microwave absorption. ZnO-KCl 1M, pH 2, electrolyte system.

——— Microwave photo ffect without voltage and with +3 V applied to the crystal.

- - - DC photocurrent at +3 V.

Normalized to incident light energies.

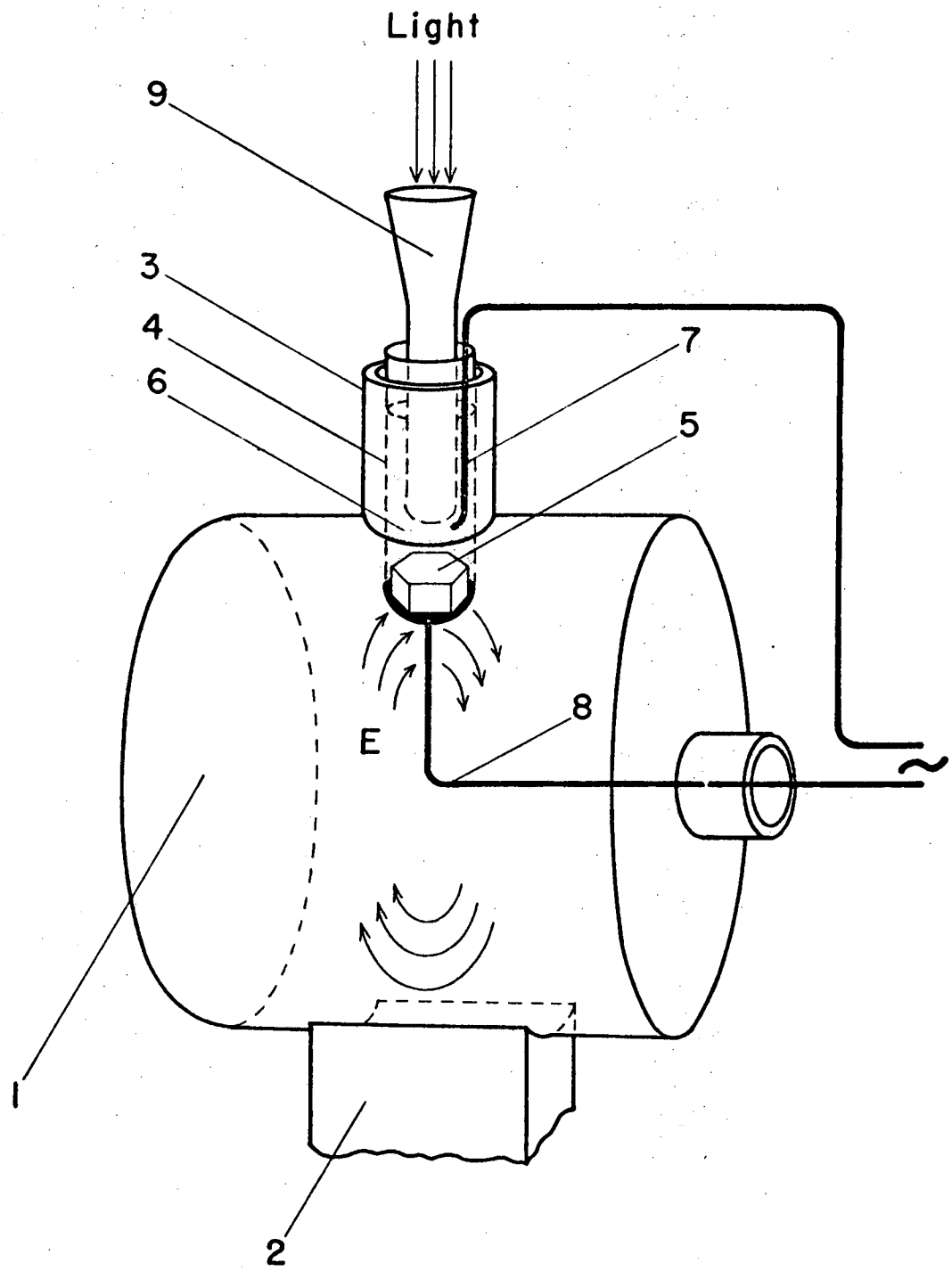

XBL7110-5400

Fig. 1
Bogomolni et al.

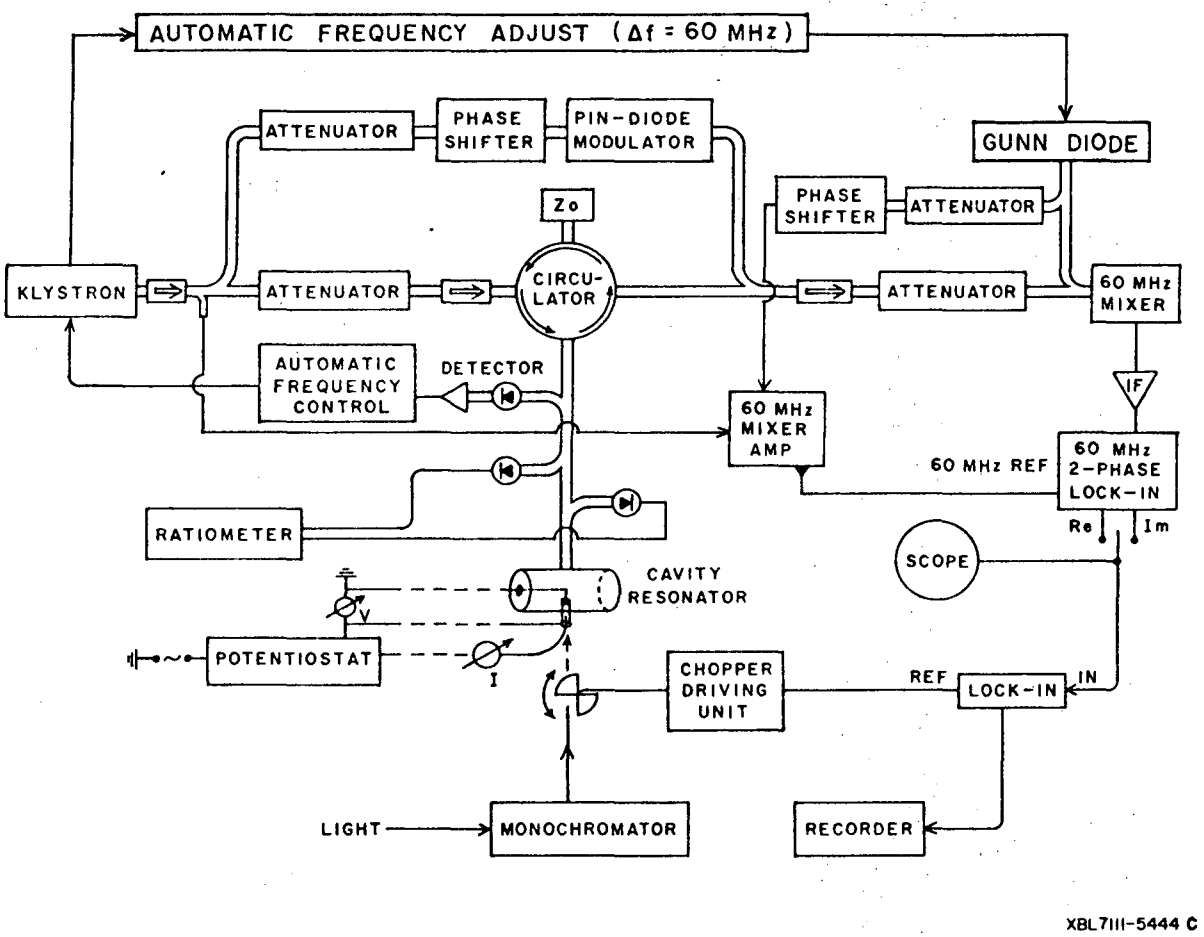

Fig. 2
Bogomolni et al.

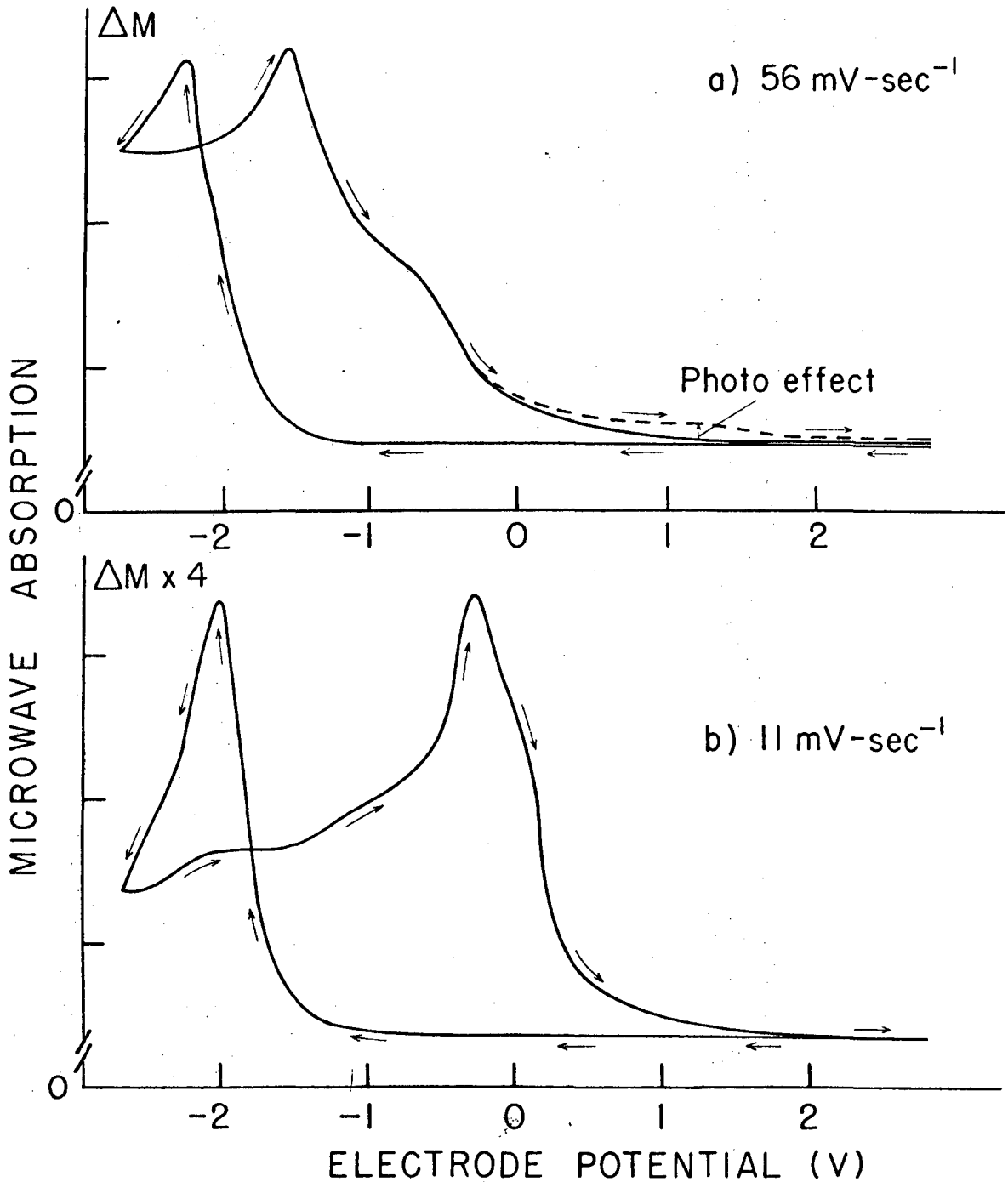

XBL7111-5442

Fig. 3
Bogomolni *et al.*

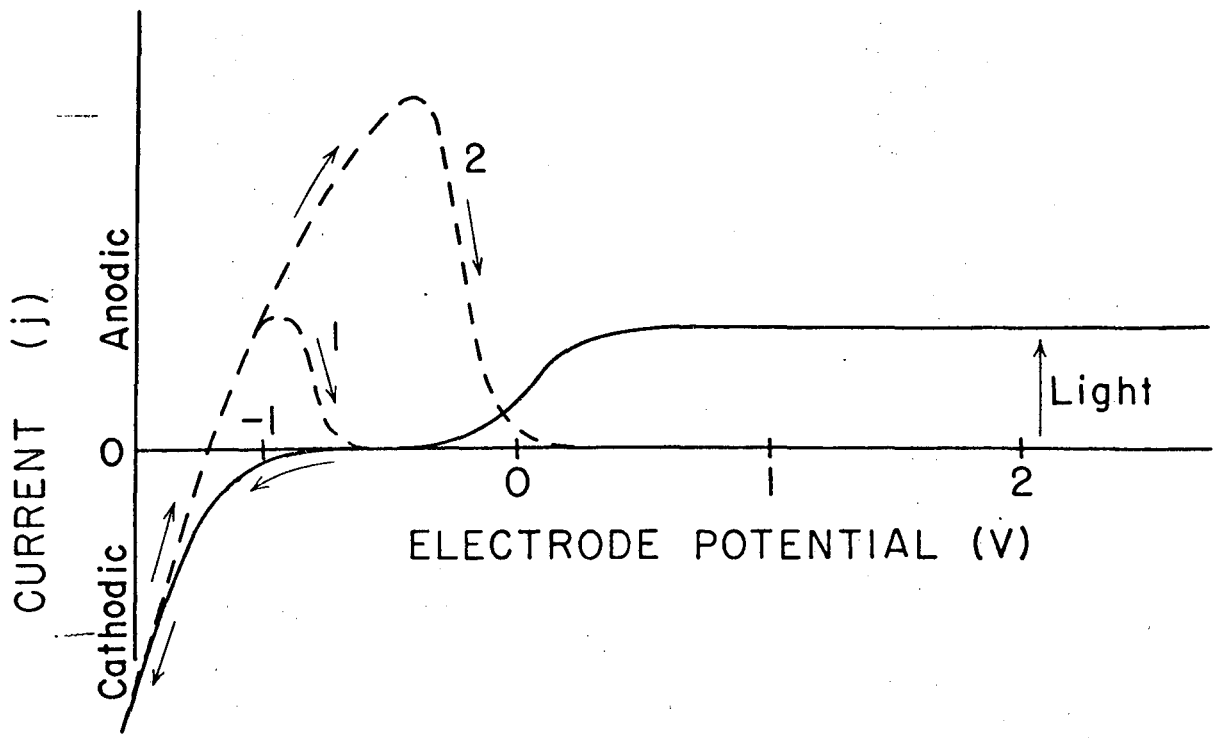

XBL7111-5443

Fig. 4
Bogomolni et al.

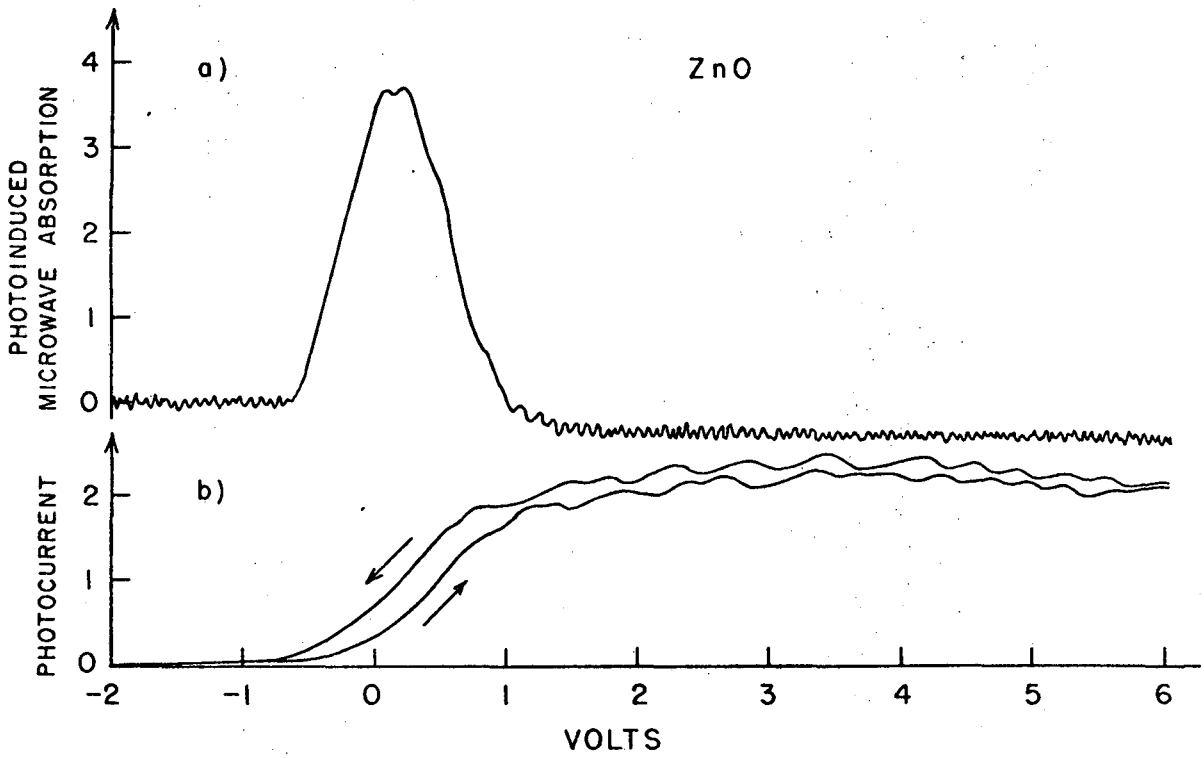

XBL 723-4575

Fig. 5
Bogomolni et al.

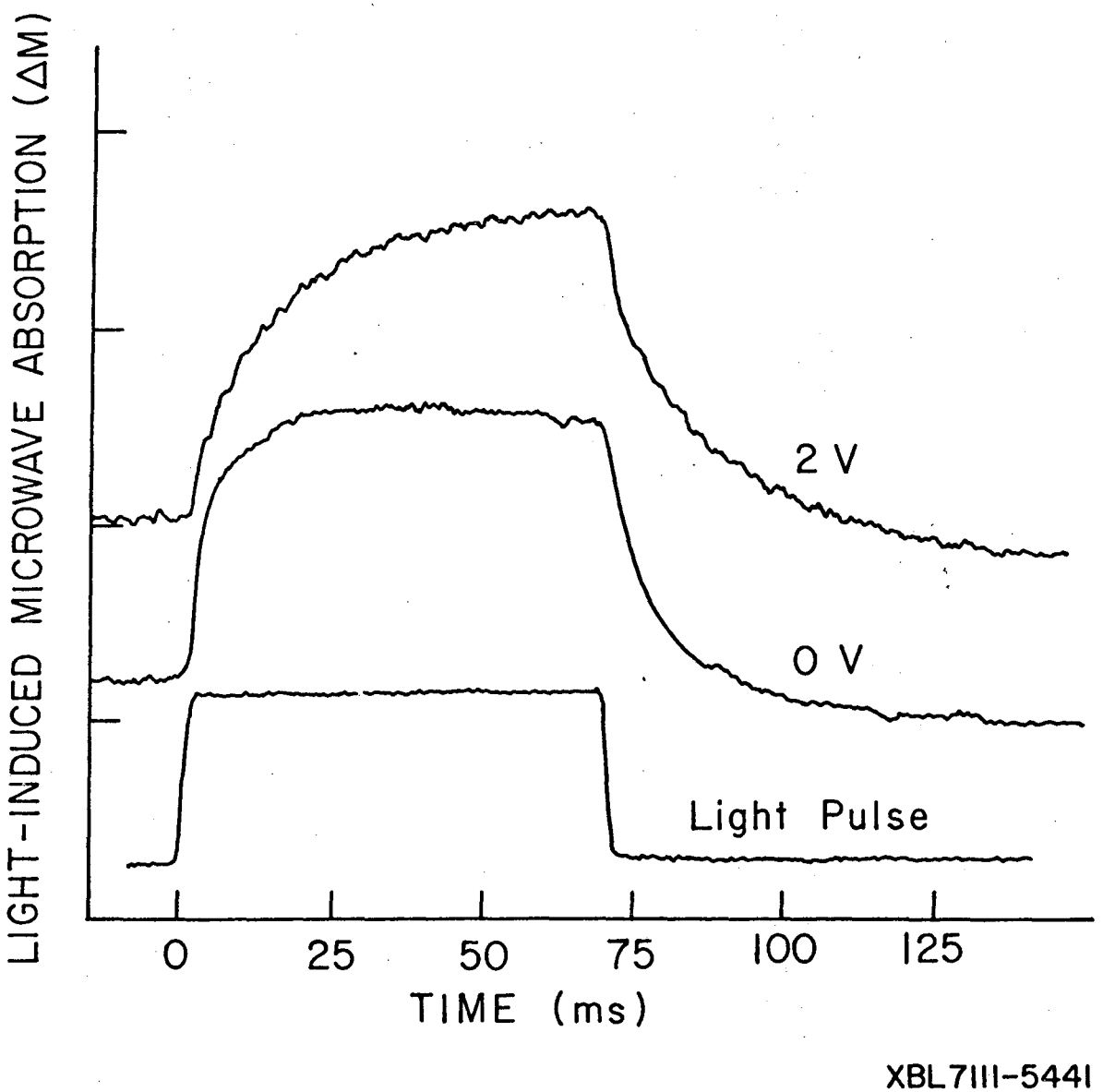

Fig. 6
Bogomolni et al.

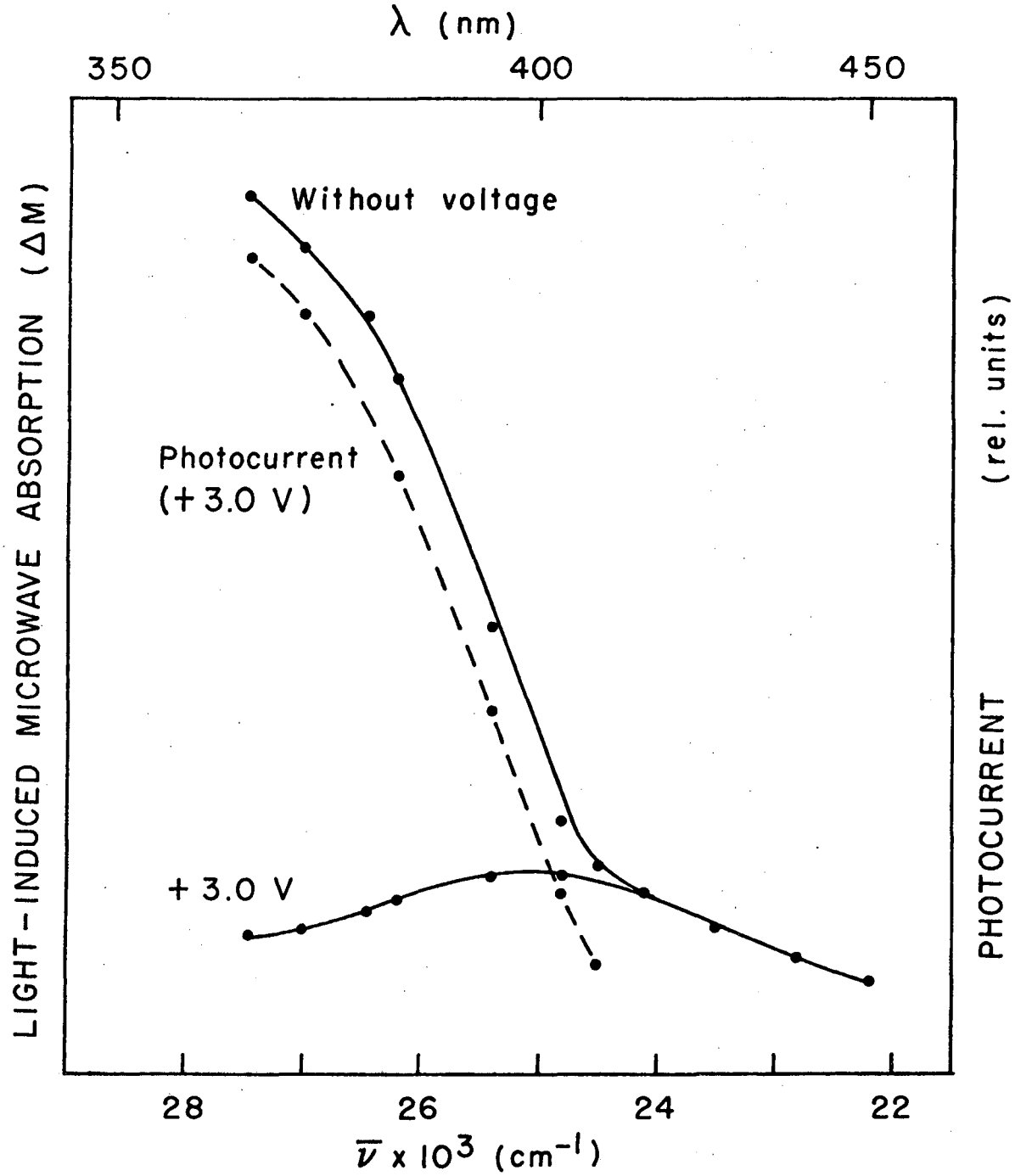

XBL728-4717

Fig. 7
Bogomolni et al.

LEGAL NOTICE

This report was prepared as an account of work sponsored by the United States Government. Neither the United States nor the United States Atomic Energy Commission, nor any of their employees, nor any of their contractors, subcontractors, or their employees, makes any warranty, express or implied, or assumes any legal liability or responsibility for the accuracy, completeness or usefulness of any information, apparatus, product or process disclosed, or represents that its use would not infringe privately owned rights.

TECHNICAL INFORMATION DIVISION
LAWRENCE BERKELEY LABORATORY
UNIVERSITY OF CALIFORNIA
BERKELEY, CALIFORNIA 94720