Presented at the IEEE Nuclear
Science Symposium, Miami,
Florida, Dec. 6-8, 1972

RECEIVED
LAWRENCE
RADIATION LABORATORY

LBL-1543

LIBRARY AND
DOCUMENTS SECTION

A VARIABLE WORDSIZE CAMAC TAPE CONTROL

Alan E. Oakes, Sypko W. Andreae, and Robert J. Rudden

December 1972

Prepared for the U.S. Atomic Energy
Commission under Contract W-7405-ENG-48

For Reference

Not to be taken from this room

LBL-1543

DISCLAIMER

This document was prepared as an account of work sponsored by the United States Government. While this document is believed to contain correct information, neither the United States Government nor any agency thereof, nor the Regents of the University of California, nor any of their employees, makes any warranty, express or implied, or assumes any legal responsibility for the accuracy, completeness, or usefulness of any information, apparatus, product, or process disclosed, or represents that its use would not infringe privately owned rights. Reference herein to any specific commercial product, process, or service by its trade name, trademark, manufacturer, or otherwise, does not necessarily constitute or imply its endorsement, recommendation, or favoring by the United States Government or any agency thereof, or the Regents of the University of California. The views and opinions of authors expressed herein do not necessarily state or reflect those of the United States Government or any agency thereof or the Regents of the University of California.

0 0 0 0 3 9 0 0 0 9 7

A VARIABLE WORDSIZE CAMAC TAPE CONTROLLER

Alan E. Oakes, Sypko W. Andreae, Robert J. Rudden
Lawrence Berkeley Laboratory
University of California
Berkeley, California

Introduction

A CAMAC magnetic tape controller is described which converts 7-track tape characters into 12, 16, 18 or 24-bit words as selected by the computer driving the CAMAC system. Regardless of the wordsize of the driving computer, data flows to and from memory in single-word transfers, in the minimum possible time and with no loss of memory space.

The controller has been designed to operate most 7-track tape decks. This is accomplished by placing the tape operation algorithm logic in a separate chassis, the tape synchronizer (see Fig. 1). The CAMAC tape controller module may be used with nearly any 7-track tape deck but each kind of deck requires a different synchronizer. Up to eight similar tape decks may be operated at one time by a single controller and synchronizer.

The first system to use this controller was driven by a PDP-11 computer through an EG&G BD011 Branch Driver. The tape decks were IBM 729 VI's. The tape synchronizer for this system was designed by Robert J. Rudden and the PDP-11 software used in debugging the system was developed by Sypko W. Andreae. The CAMAC tape controller module and variable wordsize concept were developed by Alan E. Oakes.

This paper is divided into three sections in which each author describes his contribution.

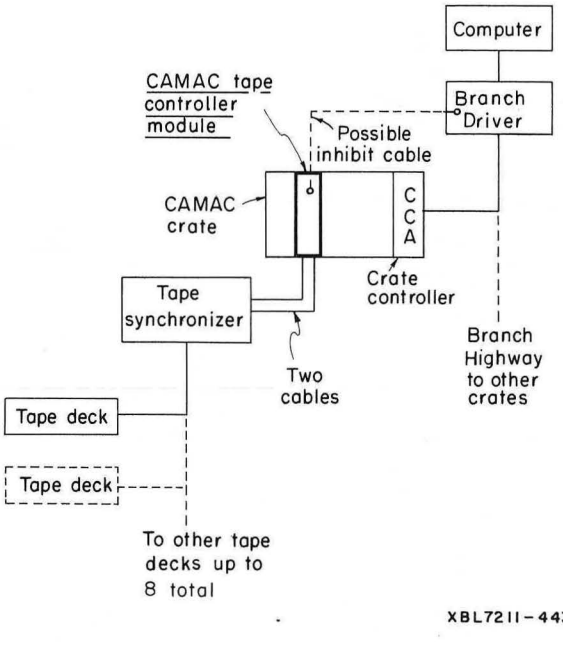

Fig. 1. CAMAC tape controller system.

Tape Controller

Data Transfer Efficiency and CAMAC System Independence

The most compelling reason for investing the effort of defining the CAMAC system was to take advantage of the long term saving of effort and expense brought about by the interchangeability of system components. In theory any CAMAC module developed by any laboratory or manufacturer may now be used in any CAMAC system anywhere in the world. It is no longer necessary, therefore, for each facility to develop all of its own data handling devices.

Obstacles remain, however, to hinder designing some types of modules so that they are interchangeable. Perhaps the most troublesome obstacle is the lack of a standard small computer wordsize. Small computers come with a variety of wordsizes--the most popular being 12, 16 and 18 bits. Consider the dilemma this presents to the designer of a CAMAC tape controller module: he must usually decide to sacrifice either data transfer efficiency or system interchangeability.

> If, on the one hand, the designer wishes to preserve system independence, he will most likely devise a controller which assembles tape characters into standard 24-bit CAMAC words; but then each CAMAC word must be broken down by the operating computer into two 12, two 16 or two 18-bit words in order to enter the computer's memory. For 16 and 18-bit computers, this process will waste both time and memory space.
>
> If, on the other hand, the designer wants data transfers to be accomplished in the minimum possible time and with no loss of memory space, he will devise a controller which assembles tape characters into the wordsize of the computer driving the CAMAC system. Unfortunately, the module will then not be system independent--it will work only in CAMAC systems driven by computers of that particular wordsize.

The tape controller described in this paper preserves both system independence and data transfer efficiency. It does so by assembling characters from 7-track tape into any of four wordsizes--12, 16, 18 or 24-bits as selected by the computer driving the CAMAC system. The size of the words to be written from or read onto the Dataway is determined by the state of two bits in a control word transmitted from the computer to the module at the start of each tape record. Data, therefore, always flow to and from memory in single-word transfers, in the minimum possible time and with no loss of memory space. The controller may operate in any CAMAC system driven by any computer; and in fact, may be used in systems driven by two or more computers of differing wordsizes.

Tape Deck Independence

In addition to being CAMAC system independent, the controller is designed to be as nearly tape deck independent as possible. Every effort has been made to give the controller the capability of operating any 7-track tape drive. This is accomplished by placing the tape operation algorithm logic in a separate chassis--the tape synchronizer. (See Fig. 1). Up to eight similar tape decks may be operated at one time by a single controller and synchronizer.

The controller module contains the logic that is useful to all 7-track tape decks--read and write registers, status and control registers, wordsize conversion logic, CAMAC data transfer algorithm logic, etc.

The synchronizer contains only the logic that is idiosyncratic to a particular kind of tape deck, and it may be as simple or sophisticated as desired. To date, the only synchronizer operating is for the IBM 729 tape deck, models II, IV, V and VI.

It is expected that synchronizers for other 7-track tape decks will be developed at a fraction of the cost of developing complete CAMAC tape controllers.

Data Transfer Synchronization

The IC chips of the controller module are physically located on one card. However, a small "jumper" card is mounted at the rear of the module (See Fig. 2) to give access to a second Dataway connector in a CAMAC crate. The module is thus double width and has two station numbers and two Look-at-Me's. One Look-at-Me may request data transfer CAMAC commands and the other signals completion of tape operations.

This tape controller, and any other CAMAC module which performs block transfers of data at a rate slower than the maximum speed of the Branch Driver,* must have a method of lowering the repetition rate of Branch Driver data transfer commands.

This controller synchronizes data transfers in any of three modes to meet the requirements of the Branch Driver.

(1) L-PER-WORD MODE - For sophisticated Branch Drivers, the module can provide a Look-at-Me request for each word to be transferred. In this mode, the CAMAC system may be used for other purposes simultaneous with writing or reading a tape record.

(2) REPEAT MODE - For recently designed Branch Drivers, the module may be operated in the repeat mode as defined in U.S. AEC Report TID-25875 and EURATOM Report EUR4100e, 1972 (Section 5.4.3.2).

(3) INHIBIT MODE - For Branch Drivers designed before the REPEAT MODE was defined and not capable of using the L-PER-WORD MODE, an inhibit signal is provided at a LEMO connector on the front panel of the module. This signal essentially the complement of the data transfer request Look-at-Me, must be run by coax to the Branch Driver (See Fig.1). A minor modification must be made to some Branch Drivers to allow the signal to inhibit initiation of CAMAC cycles. The inhibit signal will automatically permit one cycle to occur each time a data transfer is required by the tape controller during tape reading or writing. It will not interfere with the operation of the Branch Driver at other times.

*For simplicity the computer interface is referred to, throughout this paper, as a Branch Driver; although it may, of course, be a Crate Controller with a computer interface built into it.

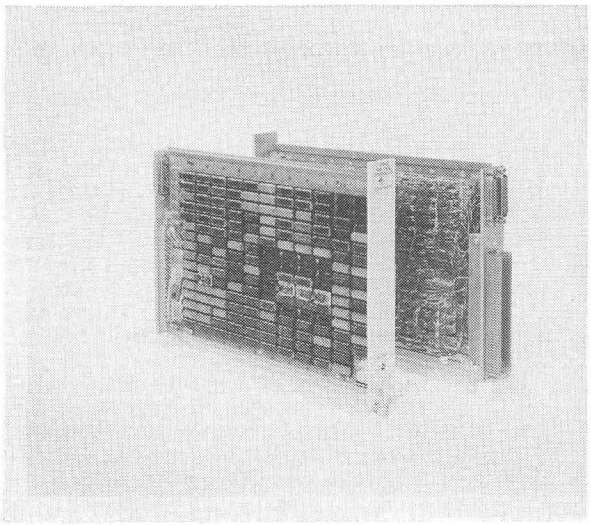

Fig. 2. CAMAC tape controller. Front and rear view.

Wordsize Conversion

In the 12, 18 and 24-bit tape writing modes, the input data selector (as shown in Fig. 3) switches Dataway W-lines 17-24 to the 24-bit input register. W-lines 1-16 are already present. The upper 24 bits of the 48-bit input register are not used. The data path, therefore, simplifies to the double buffer system shown in Fig. 4. 12, 18 or 24-bit computer words enter the first register from the Dataway W-lines and are then shifted into the second register. 6-bit tape characters are removed from the second register one-at-a-time via a circuit that is an electronic analogy of a 6-pole 4-position rotary switch. The "pointer" cycles through all four character positions (most significant first) in the 24-bit mode, through the least significant three in the 18-bit mode and through the least significant two in the 12-bit mode.

In the 12, 18 and 24-bit tape reading modes, the buffer arrangement is similar to the tape writing modes just described. 6-bit characters read from the tape are assembled into words of the selected size in the least significant portion of the 48-bit output register (See Fig. 3). Next, the words are shifted into the 24-bit output register and then they are sent to the Dataway R-lines by the output data selector.

In the 16-bit tape writing mode W-lines 17-24 are not used. The input data selector (shown in Fig. 3) passes Dataway W-lines 1-8 to the 24-bit input register. The clock inputs to the 24-bit register are held high as long as the controller is in the 16-bit mode. This causes the output levels of the register to be continuously identical with the input levels. Data, therefore, pass through the

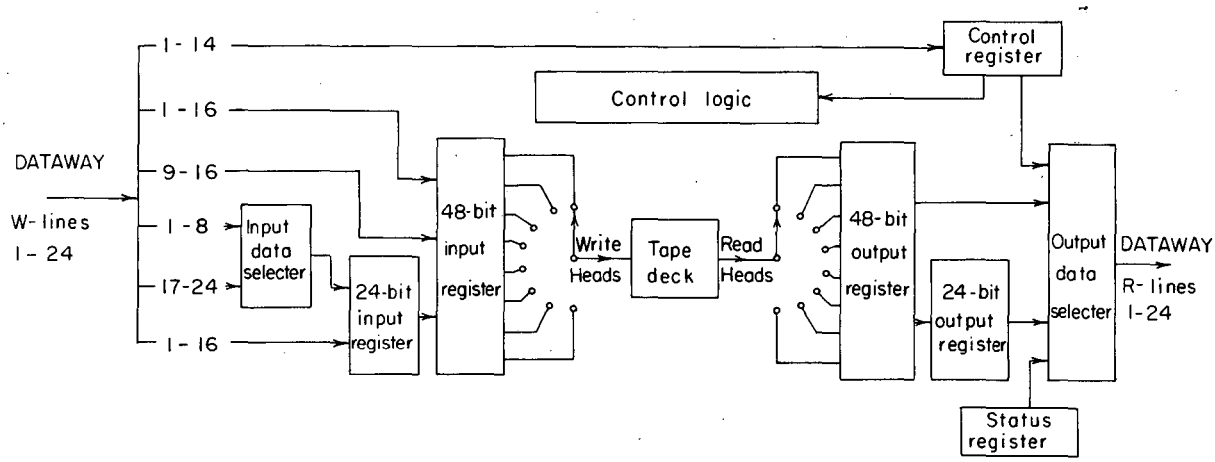

Fig. 3. Wordsize conversion.

XBL7211-4440

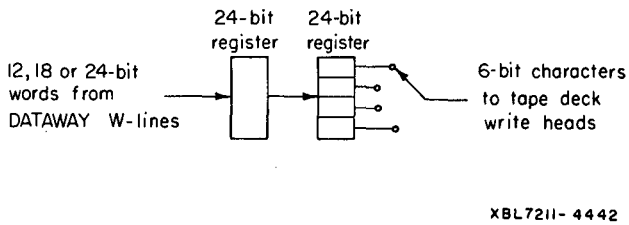

Fig. 4. Simplified diagram of 12, 18, and 24-bit wordsize conversion in the tape writing mode.

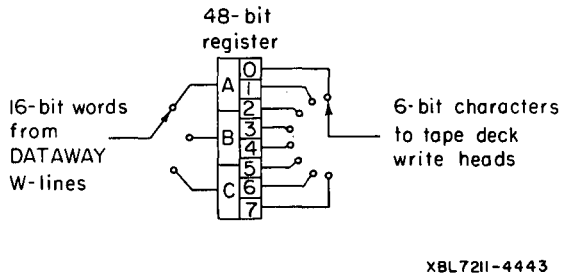

Fig. 5. Simplified diagram of 16-bit wordsize conversion in the tape writing mode.

24-bit input register as though it were transparent. The information on W-lines 1-16, then, goes to the least significant 16-bits of the 48-bit input register; it is duplicated in the middle 16-bits and again in the most significant 16-bits. The input gates to the register are controlled by a three-position "pointer" and the data path simplifies to the system shown in Fig. 5. 16-bit computer words from the Dataway W-lines are loaded sequentially into the three input positions of the register and 6-bit tape characters are removed sequentially from the eight output positions. This process is repeated to continuously disassemble 16-bit words and write them on tape with three words packed into every eight tape characters.

In the 16-bit tape reading mode, 6-bit tape characters are read, one-at-a-time, into the 48-bit output register (shown in Fig. 3). The 24-bit output register clocks are held high during the 16-bit mode, as in the 24-bit input register; so it also appears transparent to data. The output data selector switches 16-bit words, sequentially onto the Dataway R-lines from the three word positions of the 48-bit output register.

Since there are three word positions in the 16-bit mode registers, the data paths for both read and write are triply buffered. This gives the controller an unusually long latency period when used with a 16-bit computer. (The latency period is the delay the CAMAC system and computer are allowed, before data is lost, when responding to a data transfer request from the controller.)

16-Bit Tape Format

Using 7-track tape with 16-bit computers has always presented a tape formatting problem. Two methods in common use are,

1) One 16-bit word in every three tape characters leaving two bits unused in every third character.

2) One 16-bit word in every four tape characters with four bits per character leaving two tracks completely unused.

Both of these formats leave some tape bits inaccessible to the computer so it is impossible to write, and even worse, impossible to read standard 7-track tapes.

This controller, by packing three 16-bit words in every eight tape characters, allows access to every tape bit. It does, therefore, write and read standard 7-track tapes in the 16-bit mode (also, of course, in the other wordsize modes).

General Usefulness of
Hardware Wordsize Conversion

If this controller did not contain hardware wordsize conversion logic, the number of chips saved would be about 28 (out of 153). The amount of money saved by leaving out these 28 chips, their sockets, their wiring and the labor of loading and debugging them would come to less than $90.

The point I want to make is that with MSI integrated circuits available, hardware wordsize conversion is neither difficult nor expensive.

The usefulness of hardware wordsize conversion is not limited, of course, to tape controllers or CAMAC systems. It could improve the data transfer efficiency at many junctions of data paths of differing wordsize. The junctions between a computer and its peripheral devices are good examples. An intriguing possibility is a CAMAC Branch Driver which, at the option of the program, could make two-way conversions between the computer words and 24-bit CAMAC words.

IBM 729 Tape Synchronizer

The interface logic between the CAMAC Dataway and the IBM 729 tape transports is divided between two chassis--the tape controller and the tape synchronizer. The controller has just been described. The synchronizer contains the tape operation algorithm logic. It is capable of performing the following tape operations at 200, 556 or 800 BPI with even or odd parity:

Read a record
Write a record
Write a record preceded by a long EOR gap
(to erase over a bad spot on tape)
Write an EOF mark
Jump forward one record
Jump forward one file
Jump backwards one record
Jump backwards one file
Rewind
Rewind and unload

A block diagram of the IBM 729 synchronizer showing its operation is given in Fig. 6.

The synchronizer can drive IBM 729 tape transport models II, IV, V or VI. It can operate systems of up to eight transports at a time. All of the transports in a system must be similar models or they may be mixtures of II and V or IV and VI. The requirement is that all of the transports in a system must have the same tape speed. The tape speeds and available densities for IBM 729 tape transport models are summarized in Table 1.

The synchronizer checks for four kinds of tape reading or writing errors. They are,

Transverse parity error
Longitudinal parity error
Skew error
Write echo error

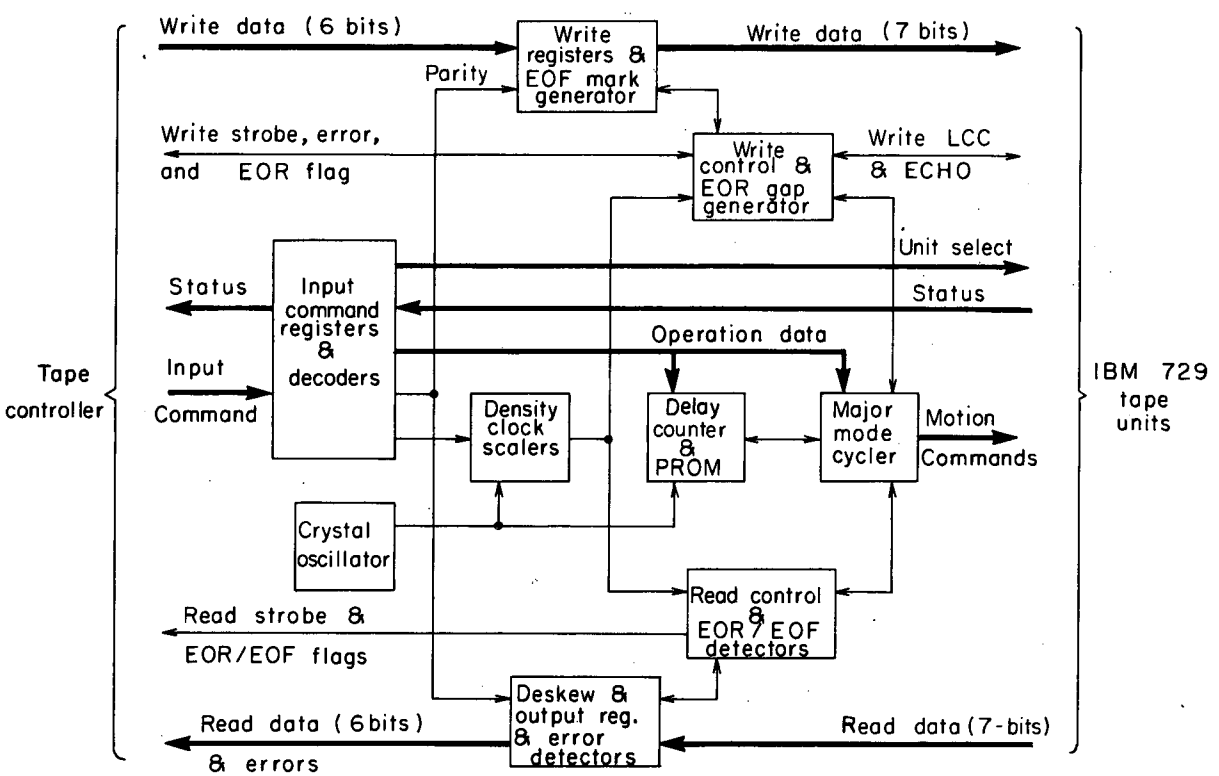

Fig. 6. Block diagram of tape synchronizer.
PROM is a programmable read-only memory
EOF is end-of-file
EOR is end-of-record
LCC is longitudinal check character.

If any of these errors occur during tape writing or reading, a bit is raised in a status word which is sent to the controller. The synchronizer also monitors other conditions in the tape decks and in itself. Bits reflecting these conditions are included in the status word.

The status word sent from the synchronizer to the controller, the command word sent from the controller to the synchronizer and the tape characters that are exchanged constitute a language. This language was made as simple as possible so that synchronizers for other tape decks might easily be developed to connect to the tape controller; and so that other controllers, in non-CAMAC systems, might be developed to connect to the synchronizer.

IBM 729 unit model	Tape speed in. / sec.		Tape density characters / in.		
	75.0	112.5	200	556	800
II	X		X	X	
IV		X	X	X	
V	X		X	X	X
VI		X	X	X	X

XBL7211-4441

Table 1. Tape speeds and densities of IBM 729 tape transport models.

Debugging Software System

A special software system was written on the PDP-11 to assist in the debugging of the CAMAC tape controller and the IBM 729 synchronizer. Many different combinations of computer initiated commands had to be experimented with before insight was gained into the most troublesome of the hardware malfunctions. To meet the demands that arose during the debugging process, the original software was continuously modified to make it even more versatile and easy to use. The software system that finally emerged is very flexible in its operation and allows a large repertoire of commands to be quickly and easily strung together into powerful routines by typing the commands on the teletype.

The functions performed by the commands can be simple ones (e.g., load the BD011 Address Register) or complex ones (e.g., write a record of a certain length from a certain area of core in 16-bit mode, density 800 bpi, using tape deck #5, check for error, if certain errors occur backspace and re-write.) Strings of commands may automatically be repeated indefinitely or for a given number of times. The commands are kept simple in structure and are easy to remember, so non-programmers can operate the system. Abundant but optional feedback about operational and hardware errors may be provided by means of the teletype.

The Keyboard Monitor

The whole system is structured around a Keyboard Monitor, which is capable of analyzing teletype keyboard input and subroutine linking. The subroutines produce the commands or strings of commands (lists) for the Tape Controller.

When control is given to the Keyboard Monitor it expects to receive some instruction from the teletype, for example:

16/1/1/FF (carriage return)

which would write a word into register A=1 of the module N=1 using function code F16.

These instructions are always of the form

P1/P2/P3/XX *

where P1, P2, P3 are the parameters, the / is the terminator for each parameter, XX is the two letter prescribed mnemonic for a command and * the terminator for the complete instruction line. There can be any number of parameters up to three. The parameters are 16-bit words. Some commands use decimal parameters, others use octal parameters.

The terminator of the instruction line can be one of three kinds:

(carriage return)	Execute command once
: (colon)	Store the instruction line in a list
@ (at)	Replace a line in the list (edit)

The keyboard command ZZ will transfer control to either the DOS Monitor or any other desired systems program like ODT-11.

The Subroutines

By far the largest part of the software system is taken up by the subroutines that are called by the Keyboard Monitor to perform a command. The subroutines can be divided into several different groups only one of which relates exclusively to the CAMAC tape controller. There are thirteen separate CAMAC Commands used by the controller. The BD011 will forward a CAMAC command to the controller as soon as the proper BD011 registers are loaded by the PDP-11. The BD011 has its own peculiar requirements about how the several essential elements of CAMAC command information must be loaded into its registers. The PDP-11 must take care of this bookkeeping and it costs time. To avoid processing this bookkeeping at CAMAC Command Execution time, all thirteen controller commands are preprocessed whenever the operator declares the current location of the controller in the CAMAC system by typing in crate and station number in a specific Initiation Command. The preprocessor then creates a list, in core, of the thirteen CAMAC commands; in a format fit for loading onto the instruction register of the BD011. Setting up a direct memory transfer of a block of data involves the loading of three registers in the BD011. With a PDP-11/20 this takes a little over twenty microseconds.

Modular Structure

The software system was written specifically for a PDP-11/20 with an BD011 Branch Driver and the Tape Controller, but is flexible enough for other uses. The software is divided in six modules that are separately assembled. Each module consists of subroutines and one module contains the complete Keyboard Monitor. Modules or subroutines can easily be replaced to serve a hardware system with different components. The system can be run under DOS, the Disk Operating System for the PDP11, or independently.

LEGAL NOTICE

This report was prepared as an account of work sponsored by the United States Government. Neither the United States nor the United States Atomic Energy Commission, nor any of their employees, nor any of their contractors, subcontractors, or their employees, makes any warranty, express or implied, or assumes any legal liability or responsibility for the accuracy, completeness or usefulness of any information, apparatus, product or process disclosed, or represents that its use would not infringe privately owned rights.

TECHNICAL INFORMATION DIVISION
LAWRENCE BERKELEY LABORATORY
UNIVERSITY OF CALIFORNIA
BERKELEY, CALIFORNIA 94720