LBL-15555
Preprint c.2

Lawrence Berkeley Laboratory

UNIVERSITY OF CALIFORNIA

RECEIVED
LAWRENCE
BERKELEY LABORATORY
JUN 8 1983
LIBRARY AND
DOCUMENTS SECTION

ENERGY & ENVIRONMENT DIVISION

Submitted to the Review of Scientific Instruments

RADON DAUGHTER CAROUSEL: AN AUTOMATED INSTRUMENT FOR MEASURING INDOOR CONCENTRATIONS OF ^{218}Po, ^{214}Pb, AND ^{214}Bi

William W. Nazaroff

March 1983

TWO-WEEK LOAN COPY

This is a Library Circulating Copy which may be borrowed for two weeks. For a personal retention copy, call Tech. Info. Division, Ext. 6782.

ENERGY
AND ENVIRONMENT
DIVISION

LBL-15555 c.2

Prepared for the U.S. Department of Energy under Contract DE-AC03-76SF00098

DISCLAIMER

This document was prepared as an account of work sponsored by the United States Government. While this document is believed to contain correct information, neither the United States Government nor any agency thereof, nor the Regents of the University of California, nor any of their employees, makes any warranty, express or implied, or assumes any legal responsibility for the accuracy, completeness, or usefulness of any information, apparatus, product, or process disclosed, or represents that its use would not infringe privately owned rights. Reference herein to any specific commercial product, process, or service by its trade name, trademark, manufacturer, or otherwise, does not necessarily constitute or imply its endorsement, recommendation, or favoring by the United States Government or any agency thereof, or the Regents of the University of California. The views and opinions of authors expressed herein do not necessarily state or reflect those of the United States Government or any agency thereof or the Regents of the University of California.

Submitted to
Review of Scientific Instruments

LBL-15555
EEB-Vent 83-3

RADON DAUGHTER CAROUSEL: AN AUTOMATED INSTRUMENT FOR MEASURING INDOOR CONCENTRATIONS OF ^{218}Po, ^{214}Pb, and ^{214}Bi

William W. Nazaroff

Building Ventilation and Indoor Air Quality Program
Lawrence Berkeley Laboratory
University of California
Berkeley, CA 94720

March 1983

This work was supported by the Assistant Secretary for Conservation and Renewable Energy, Office of Building Energy Research and Development, Building Systems Division, and by the Director, Office of Energy Research, Office of Health and Environmental Research, Human Health Assessments Division and Pollutant Characterization and Safety Research Division of the U.S. Department of Energy under Contract No. DE-AC03-76SF00098.

ABSTRACT

A microprocessor-controlled instrument for measuring the concentrations of radon progeny in indoor air is described. The measurement technique is based on alpha spectroscopy and uses two counting intervals following a sampling period during which radon progeny are collected on a filter. The counting intervals are selected to provide optimal precision for measuring ^{222}Rn progeny for fixed total measurement times ranging from 30 to 60 minutes: concentrations as low as 0.5 pCi/l can be measured with less than 20% uncertainty in 45 minutes. The instrument can also be used to estimate the potential alpha energy concentration of ^{220}Rn decay products. The device operates under the control of a computer or a data terminal, and, in the absence of high concentrations of cigarette smoke, functions for week-long periods between filter changes. The user can specify the sampling and counting-interval timing over a wide range and select from among several operating modes. A number of performance tests are also described indicating that for typical indoor concentrations the measurement uncertainty is dominated by counting statistics.

Keywords: alpha spectroscopy, indoor air quality, instrumentation, radon, radon progeny, thoron progeny.

INTRODUCTION

Inhalation exposure to the radioactive progeny of ^{222}Rn (radon) constitutes a major portion of the naturally-occurring radiation dose to the general public.[1] Of principal concern are the alpha decays of ^{218}Po and ^{214}Po following the inhalation of ^{218}Po, ^{214}Pb, and ^{214}Bi (see Figure 1). Such exposures have been correlated with an observed excess incidence of lung cancer among uranium and other hard-rock miners.[2] Exposure to the decay products of ^{220}Rn (thoron) can also result in a significant dose from the alpha decay of ^{212}Bi and ^{212}Po after inhalation of ^{212}Pb and ^{212}Bi, however, because of the short half-life of thoron relative to that of radon, this dose is commonly much less than that due to radon progeny exposure. In residences typical radon progeny concentrations result in occupant exposures that range from 1 to 20 percent of those currently permitted to uranium miners. Possibly more significant is the fact that in a small fraction of houses in the United States, Canada, and Europe, exposures can approach or even exceed those permitted miners.[3]

A commonly applied technique for measuring radon progeny in air involves drawing air through a filter, then counting the total alpha activity on the filter for three specified time intervals after sampling.[4] Radon progeny concentrations are calculated by taking linear combinations of the three count totals with the coefficients determined by solving the Bateman equations.[5] This technique was developed for measuring high concentrations in mines. Recently, extended counting intervals were suggested to improve measurement sensitivity for use indoors, but for concentrations at the low end of the typical range for

residences the measurement precision for ^{218}Po is poor.[6]

An alternative technique uses alpha spectroscopy to distinguish the decays of ^{218}Po from those of ^{214}Po.[7] In this case two counting intervals provide enough information to solve for the radon progeny concentrations. The alpha spectroscopic technique provides much better precision for ^{218}Po than the total alpha technique, and, further, allows the separate detection of alpha decays from progeny of the other isotopes of radon (particularly ^{212}Po from thoron), which can be of interest in some situations and can occasionally interfere with the radon progeny measurement if not accounted for.

Groer and co-workers developed an automated monitor (EWLM) which uses alpha spectroscopy and total-beta detection (from the decays of ^{214}Pb and ^{214}Bi) measured during a single interval after sampling to measure concentrations of radon progeny in air.[8] An instrument based on their design is now commercially available.[9] This appears to be the only example in the literature of an automated instrument for measuring concentrations of individual radon progeny. The EWLM is capable of making very rapid measurements (about 5 minutes per sample). Its fundamental limitation is the complexity and, therefore, cost of the filter transport mechanism. Less important disadvantages are fixed sampling- and counting-interval timing, and the lack of provision for communicating with control or data-logging equipment.

In view of these limitations, I undertook the development of an automated instrument, the radon daughter carousel (RDC), primarily for use in ongoing research at Lawrence Berkeley Laboratory into the behavior of radon progeny indoors. The RDC operates by collecting radon

progeny on one of seven filters located near the perimeter of a disk. Following the sampling period the disk is rotated to position the filter under a detector where the alpha decays from ^{218}Po, ^{214}Po, and ^{212}Po are separately counted during two intervals. The RDC can be operated as a stand-alone device, from a data terminal, or under control of a computer system. The sampling- and counting-interval times and decays between these intervals are each programmable over a range of 0 to 33 minutes. The RDC is substantially simpler in design and construction than the EWLM, yet radon progeny concentrations can be measured with comparable precision. The primary disadvantages of the RDC compared with the EWLM are: (1) a longer measurement time is needed (30 minutes is the practical minimum for precise measurements of low concentrations with the two-count alpha spectroscopic technique); and (2) the data must be processed off-line. The latter disadvantage poses no serious problem as the processing program can be stored and executed with a hand-held calculator.

This paper describes the mechanical, electronic, and software design for the prototype RDC (pictured in Figure 2). I also discuss the measurement procedure and the timing optimization, and report on a number of performance tests which provide indications of the degree of precision that can be expected in using the RDC.

1. INSTRUMENT DESIGN

A. Mechanical System

The sampling system of the radon daughter carousel has seven filter holders mounted near the perimeter of an aluminum disk or platter, 20 cm

in diameter. The filter holders[10] have been modified to reduce the distance between the filter surface and the top of the holder to 2.6 mm. Membrane filters,[11] which have a collection efficiency for radon progeny of nearly 100% with sufficient surface collection for alpha spectroscopy to be possible,[12] are backed by an impermeable paper gasket. This gasket reduces the diameter of the filter through which air is drawn from 22.2 to 18.5 mm, thereby preventing a significant fraction of alpha particles which would otherwise strike the detector from hitting the filter holder cap. A Viton O-ring prevents air from leaking around the filter. Mounted to the bottom of each filter holder is a brass nipple which extends 25 mm below the platter. The platter is rotated by means of a 1 RPM motor to move filters from the sampling position to the counting position, situated two filter positions (i.e. 102.8 degrees) apart rather than one to reduce any influence the detector may have on radon progeny in the sampled air stream. Indentations on the edge of the platter are sensed by a microswitch to accurately position the platter. An aluminum cover minimizes diffusive deposition ("plate-out") of radon progeny on filters in other than the sampling position.

To sample air, a nylon cylinder is pneumatically driven upward to couple to the brass nipple (see Figure 3). An O-ring provides an air-tight seal between the cylinder and the nipple. A photo transistor and light-emitting diode are used to detect the cylinder position. Pressure to the pneumatic drive is supplied by the same diaphragm pump[13] used to draw the air sample. The intake-vent and exhaust-vent solenoid valves are opened briefly when the pump is started to ensure that it does not stall. Mechanical malfunctions which cause the platter to stop out of position or the cylinder to fail to move up or down are detected by the

microprocessor which will attempt, once, to correct the problem before entering an error state.

To ensure constancy of flow rate during a single sample, and as the filters become loaded, a pressure regulator[14] which maintains a constant pressure difference across the flow adjustment valve is installed in the exhaust stream of the sampling pump. The typical sampling flow rate is eight liters per minute; to measure the flow rate precisely the exhaust is connected to a dry-test meter and the total volume sampled over 24 hours is used to determine the mean sampling flow rate.

The RDC is designed to operate for periods of several days without attention; when sampling in air with low to moderate particulate concentrations, the flow rate does not drop significantly over one week. (In one recent experiment in a room with a high concentration of tobacco smoke, the filters became sufficiently clogged after only seven hours of operation that the sampling interlock cylinder failed to disengage. In such a case longer times to failure can be achieved by reducing the flow rate, reducing the sampling time, or reducing the frequency of sampling.)

B. Electronic System

Alpha particles are sensed by a 27.6 mm diameter surface-barrier detector[15] which has a light-tight front surface of aluminum, 1850 angstroms thick. The front face of the detector is 5.7 mm from the filter surface, and the gap contains air at atmospheric pressure.

A bias of -100 V, derived from a DC-to-DC voltage converter,[16] is applied to the detector (see Figure 4). Pulses from the detector are

preamplified, then fed into a two-stage inverting amplifier with a gain of approximately 50. The amplifier output is buffered and made available at the rear panel of the RDC for optional input to a multi-channel analyzer. This output also drives a three-channel analyzer with thresholds set so that an alpha particle from ^{218}Po, ^{214}Po, or ^{212}Po triggers a pulse on channel A, B, or C output, respectively, each monitored by a five-decade counter. The counters are interfaced to a five-digit front-panel display and to an eight-bit microprocessor[17], which controls the operation of the RDC. Solid-state relays provide the interface between the computer and the electromechanical devices (pump, platter motor, and three solenoid valves). The microprocessor monitors the cylinder-position sensor and the platter-position switch, as well as front-panel control switches for advancing the platter and starting a measurement sequence. The processor also controls eight measurement-status lamps on the front panel.

The program under which the microprocessor operates resides in electronically-programmable read only memory. The program capacity of the RDC is 2048 bytes; the current program utilizes 1440 bytes. Random-access memory (RAM) used for program execution and data storage is provided by the 64 bytes of on-chip RAM in the microprocessor.

The RDC is designed to primarily be operated either from a data terminal or as a slave to another computer. Communication is over an EIA RS-232C data line with a universal asynchronous receiver transmitter at 30 characters per second. This data rate was selected to permit operation of the RDC with a wide range of printing terminals; the low rate of data production by the carousel (one string of 65 characters per meas-

urement, typically every 30 minutes) makes this transmission rate practical.

C. Software

The software for the RDC was written to provide flexible and simple use of the instrument, while at the same time minimizing the program development time. Two types of keyboard entries are permitted: parameter assignment and command. Eight parameters, used in controlling automatic operation of the carousel, may be assigned by the user with the format p=dd, where p is the parameter designation (A-H) and dd are two decimal characters (hexadecimal for parameter G) to be assigned to p (see Table 1). For parameters representing times, each unit represents 20 seconds, and setting the value to 0 causes the carousel to skip that state in automatic execution. Thus, in addition to its normal sample and two-count operating mode, the carousel can be programmed to execute the rapid single-count procedure for measuring ^{218}Po concentrations and estimating the potential alpha energy concentration (PAEC) of radon progeny.[18] One could also use the carousel to monitor alpha decays from a filter (or other suitably sized material) and print the results over intervals ranging from 20 secs to 33 minutes.

Commands are used to operate the carousel manually, inquire about status and results, and start an automatic measurement. (See Table 2 for a list of commands and their functions.) When the carousel is in automatic operation, only commands that inquire about status or results, or those that reset the machine may be executed. New parameters, on the other hand, may be entered at any time.

2. DATA ANALYSIS AND TIMING OPTIMIZATION

The six counts resulting from the two-count procedure are first corrected to obtain four values: counts due to ^{218}Po decay in the first count interval (N_1), counts due to ^{214}Po decay in each interval (N_2 and N_3 for the first and second interval, respectively), and counts due to ^{212}Bi and ^{212}Po decay summed over both intervals (N_4). Three corrections to the raw count totals are applied to obtain these values: (1) background count rates are subtracted (these are approximately 0.05, 0.01 and 0.00 min^{-1} for channels A, B, and C, respectively); (2) energy degradation of the alpha particles is accounted for (the mean ratio of channel A to channel B counts due to ^{214}Po decay was measured to be 0.025; the ratio of channel B to channel C counts due to ^{212}Po decay, determined by analysis the ^{214}Po spectrum, is estimated to be 0.11); and (3) counts in the channel A due to ^{212}Bi are transferred to channel C. (The number of counts so transferred is 0.54 times the number of counts due to ^{212}Po decay.) Sampled radon progeny concentrations are then computed from the equation

$$I_j = \frac{1}{\eta V} \sum_{i=1}^{3} K_{ji} N_i \qquad (1)$$

where I_j is the activity of the jth radon decay product (^{218}Po, ^{214}Pb, and ^{214}Bi respectively) in pCi/l,

η is the detection efficiency of the system (counts/dis),

V is the sampling flow rate (l/min),

and K is a 3 x 3 matrix whose elements depend on sampling and counting interval timing (pCi dis^{-1} min^{-1}) (see Appendix).

The PAEC (p_R) of radon progeny is obtained by

$$p_R = \frac{1}{\eta V} \sum_{i=1}^{3} L_i N_i$$

where $L_i = 0.00103\ K_{1i} + 0.00507\ K_{2i} + 0.00373\ K_{3i}$ (WL dis^{-1} min^{-1}).

The counting-interval timing for the RDC has been optimized to provide the maximum precision for measuring individual radon progeny concentrations with fixed total measurement times. The optimization parameter used was the mean of the three adjusted minimum measurable concentrations (MMC′) of the radon progeny, defined as the concentrations at which the relative standard deviation in the measurement is 20% assuming a sampling flow rate of 8 l/min, a detector efficiency of 0.27 and activity ratios of 0.5 for ^{214}Pb:^{218}Po and 0.4 for ^{214}Bi:^{218}Po (taken to be representative of ratios found inside houses with relatively low air-exchange rates, i.e. less than 0.5 ach). Figure 5 is a plot of MMC′ for each decay product versus total measurement time for the two-count alpha spectroscopic procedure with a 5-minute sampling time. For measurement times in the vicinity of 30 minutes, small increases in measurement time are seen to substantially improve measurement precision for ^{214}Pb. This observation can be understood by recognizing that ^{214}Pb decays do not directly contribute to observed counts; sufficient time for decay of it and its product, ^{214}Bi, must be permitted for it to be measured precisely. With a measurement period of 35 minutes or more,

the RDC is capable of measuring concentrations of approximately 1 pCi/l or less with moderate precision.

Because the RDC is designed to reuse filters, some alpha activity may be present when sampling begins. Count totals can be corrected for the effects of this previously deposited activity. However, for measurements of radon progeny it is rarely necessary: for a 30-minute measurement period, the correction is negligible for channel A, while for channel B it is approximately 1% of the counts from the previous use of that filter. The accumulation of thoron progeny activity is significant, because of the long half-life of ^{212}Pb, and this fact is exploited to estimate the potential alpha energy concentration of thoron progeny (p_T),[19] even though in most indoor environments the activity in channel C resulting from a single 40-liter sample would be insufficient to measure p_T precisely in a 30-minute period. For the first several measurements with initially clean filters, N_4 for a given p_T depends substantially on the degree of equilibrium between ^{212}Pb and ^{212}Bi. After one day this dependence is reduced so that p_T may be estimated, without knowing the relative concentrations of ^{212}Pb and ^{212}Bi, using the formula

$$p_T = \frac{1}{\eta V} t N_4 \tag{3}$$

Values of t for three timing sequences are given in Table 3, assuming either (1) that the activity concentration of ^{212}Bi is zero (t_d), or (2) that the activities concentrations of ^{212}Pb and ^{212}Bi are equal (t_e).

3. PERFORMANCE TESTS

An alpha spectrum for the RDC, showing ^{218}Po and ^{214}Po peaks as well as threshold settings for the three-channel analyzer is presented in Figure 6. The primary source of energy degradation in this spectrum appears to be the self-absorption of the filter. Only modest portions of the 360 keV FWHM are accounted for by energy loss in air (160 keV according to a Monte-Carlo calculation), energy loss due to particulate loading (less than 1 keV for dusty atmospheres), and the energy resolution of the detector (30 keV according to manufacturer-supplied data). Energy loss in the membrane filter could account for the degradation observed if radon progeny penetrate through 5% of the filter thickness during sampling. The contribution of electronic noise in the preamplifier and amplifier may also be significant; however it is probably less than that of filter absorption.

Two techniques were used to determine the detection efficiency of the carousel: (1) an electrodeposited ^{241}Am source, with an 18-mm diameter active area, and activity certified to 0.7% by the National Bureau of Standards, yielded an efficiency of 0.274; (2) a Monte-Carlo calculation for this source taking 27.6 mm for the detector diameter (nominal specification from manufacturer), and 5.7 mm, as measured, for the source-detector spacing yielded 0.283. The discrepancy may result from inaccurate centering of the source under the detector. I use 0.271 as the efficiency for filter samples which have an 18.5 mm sampling diameter, causing a 0.003 reduction in efficiency relative to the 18 mm source.

The accuracy and reproducibility of positioning the filters under the detector were tested using the ^{241}Am source. First the source was placed in each of the seven filter positions in turn and counted for ten minutes. The mean number of counts was 33,560 with a standard deviation of 311, so that the estimated error (SD) due to filter positioning is 0.7%. Reproducibility was tested by placing the source in one position and rotating the platter 360 degrees between 10-minute counts. The standard deviation for 14 count periods was 213; thus the estimated reproducibility error of a single position is 0.3%.

The flow-rate stability of the RDC was tested by connecting the exhaust port to an electronic flowmeter,[20] which, in turn, was monitored by a microprocessor data logger. The carousel was programmed to collect a 5-minute sample every 30 minutes, and allowed to run for one week. During the central four minutes of each sampling period, the microcomputer read the flowmeter output voltage, typically 400 times. After each period, the mean and standard deviation of the flow rate measurements were printed. The mean and standard deviation for the 329 samples were 7.91 and 0.08 lpm, and there was no apparent trend toward lower flow rates as the filters became loaded. Thus, determining the flow rate of individual measurements by measuring the average flow rate over several measurements (using a dry-test meter, for example), is expected to contribute 1% to measurement uncertainty. The average standard deviation of flow rate during a single sampling period was 0.01 lpm, and the maximum was only 0.09 lpm, so the assumed condition of constant flow rate during sampling is reasonably satisfied.

As a final test, six measurements of radon progeny concentrations in a research house were made simultaneously with the RDC and by grab sampling, also using alpha spectroscopy. During this experiment radon progeny concentrations ranged from 25 to 70 pCi/l. The mean and standard deviation of the ratios of measurements by grab-sampling to those by the RDC were 1.07 ± 0.05, 1.04 ± 0.07 and 1.03 ± 0.04 for ^{218}Po, ^{214}Pb, and ^{214}Bi, respectively. Thus, in spite of the fact that these two devices use the same measurement principle, and were calibrated with the same alpha source, there appears to be a small systematic bias between them.

The results of the optimizations and performance tests indicate that, while for radon progeny concentrations greater than about ten pCi/l uncertainties associated with efficiency and sampling flow rate determinations are important, for concentrations less than a few pCi/l measurement uncertainty will be dominated by counting statistics. One shortcoming of the analysis reported here, and, indeed, throughout the literature, is that the primary efficiency determination is based on an electrodeposited alpha-emitting radioisotope (such as ^{241}Am) -- there are no radon progeny standards. Researchers at our laboratory, and elsewhere, are exploring the possibility of generating known concentrations of radon progeny indoors which would then be collected on filters and used to calibrate instruments such as the RDC. Such calibrations could be based on ^{226}Ra solutions from the National Bureau of Standards and would thus provide a consistent basis for calibrating radon and radon progeny measurements.

ACKNOWLEDGEMENT

This work was greatly facilitated by many colleagues at Lawrence Berkeley Laboratory: L. Davis contributed substantially to the design and fabrication of the mechanical portions of the instrument; A. Robb assisted with finding and correcting electronic hardware errors; K. Revzan modified an existing assembler to accommodate 8035 code; F. D'Amato, a summer student employee, carried out preliminary feasibility studies and design work; J. Koonce provided coordination support throughout the project. The manuscript was typed by N. Morrison and benefited from the review of Dr. R. Sextro, Dr. A. Nero, and J. Girman.

This work was supported by the Director, Office of Energy Research, Office of Health and Environmental Research, Human Health and Assessments Division and Pollutant Characterization and Safety Research Division, and by the Assistant Secretary for Conservation and Renewable Energy, Office of Building Energy Research and Development, Building Systems Division of the U.S. Department of Energy under Contract No. DE-AC03-76SF00098.

Reference to a company or product name does not imply approval or recommendation of the product by the University of California or the U.S. Department of Energy to the exclusion of others that may be suitable.

REFERENCES AND NOTES

1. A.V. Nero, "Airborne Radionuclides and Radiation in Buildings: A. Review," Health Phys. 1983 (in press).

2. Committee on Biological Effects of Ionizing Radiation, The Effects on Populations of Exposure to Low Levels of Ionizing Radiation, (NAS, Washington, D.C., 1980).

3. A.V. Nero, "Indoor Radiation Exposures from Radon and Its Daughters: A View of the Issue," Health Phys. 1983 (in press).

4. J.W. Thomas, Health Phys. 23, 783 (1972).

5. Y. Fu-Chia and T. Chia-Yong, Health Phys. 34, 501 (1978).

6. W.W. Nazaroff, "Optimizing the Total-Alpha Three-Count Technique for Measuring Concentrations of Radon Progeny in Residences," Health Phys. 1983 (in press).

7. W.W. Nazaroff, A.V. Nero, and K.L. Revzan, in Natural Radiation Environment, edited by K.G. Vohra et al. (Wiley Eastern, Delhi, 1982) p. 350.

8. P.G. Groer, R. Evans, and D.A. Gordon, Health Phys. 24, 387 (1973); D.J. Keefe, W.P. McDowell, P.G. Groer, and R.T. Witek, IEEE Trans. Nucl. Sci. NS-25, 787 (1978).

9. Harshaw Chemical Co., 6801 Cochran Rd., Solon, OH 44139.

10. Model 1107, Gelman Instrument Co., 605 S. Wagner Rd., Ann Arbor, MI 48106.

11. Type AAWG 025 00, 0.8 μm pore size, Millipore Corp., 80-T Ashby Rd., Bedford, MA 01730.

12. A. Busigin, A.W. van der Vooren, and C.R. Phillips, Env. Sci. Tech. 14 533 (1980).

13. Model 2107, 4.6 mm eccentric, Thomas Industries, Inc., 1419 Illinois Ave., Sheboygan, WI 53081.

14. Model 63BD, Moore Products Co., Spring House, PA 19477.

15. Model BR-35-600-100, EG & G Ortec, 100 Midland Rd., Oak Ridge, TN 37830.

16. Model C8T, Venus Scientific Co., 399 Smith St., Farmingdale, NY 11735.

17. Model 8035, Intel Corp., 3065 Bowers Ave., Santa Clara, CA 95051.

18. The PAEC, commonly expressed in working levels (WL), is a linear combination of the short-lived radon progeny concentrations designed to reflect their relative health hazard. The PAEC is defined as the sum of the alpha decay energy to Pb-210 of all ^{222}Rn progeny in a given volume of air; 100 pCi/l of each of the short-lived decay products yields a PAEC of about 1 WL, defined to be 1.3×10^5 MeV per liter. The single-count procedure is described in K.L. Revzan and W.W. Nazaroff, "Rapid Spectroscopic Technique for Determining the Potential Alpha Energy Concentration of Radon Decay Products," Health Phys. 1983 (in press).

19. Although the PAEC was originally defined for ^{222}Rn decay products, the definition can be extended to ^{220}Rn progeny. In this case the alpha decay energy is summed to ^{208}Pb, and 1.3×10^5 MeV per liter, or one WL of thoron progeny, results from about 7.4 pCi/l of both ^{212}Pb and ^{212}Bi.

20. Model FC261, Tylan Corp., 23301 So. Wilmington Ave., Carson, CA 90745.

APPENDIX: CALCULATING THE K-MATRIX ELEMENTS

A measurement timing sequence is specified by (t_o, $t_{1a} - t_{1b}$, $t_{2a} - t_{2b}$) where,

t_o is the sampling time,

t_{ia} is the start of the ith counting interval,

t_{ib} is the end of the ith counting interval,

and all times are referred to the beginning of sampling.

Solving the Bateman equations, the corrected observed counts can be expressed as linear combinations of the radon progeny activity concentrations:

$$N_i = \eta V \sum_{j=1}^{3} H_{ij} I_j . \qquad i=1-3 \qquad \text{(A1)}$$

For alpha spectroscopy, the H-matrix elements are given by

$$H_{11} = G_{11}(t_{1b}) - G_{11}(t_{1a}), \qquad \text{(A2a)}$$

$$H_{1j} = 0, \qquad j=2,3 \qquad \text{(A2b)}$$

$$H_{2j} = G_{3j}(t_{1b}) - G_{3j}(t_{1a}), \qquad j=1-3 \qquad \text{(A2c)}$$

$$\text{and} \quad H_{3j} = G_{3j}(t_{2b}) - G_{3j}(t_{2a}). \qquad j=1-3$$

(A2d)

The functions $G_{ij}(t)$ give the number of decays on the filter during the interval t_o to t of the ith decay product due to sampling one pCi/l of the jth decay product at a rate of one l/min.

$$G_{11}(t) = \frac{2.22}{\lambda_1^2} Z_1(t),$$

(A3a)

$$G_{31} = \frac{2.22}{\lambda_1} \left[\frac{f_{21}f_{31}}{\lambda_1} Z_1(t) + \frac{f_{12}f_{32}}{\lambda_2} Z_2(t) + \frac{f_{13}f_{23}}{\lambda_3} Z_3(t) \right]$$

(A3b)

$$G_{32} = \frac{2.22}{\lambda_2} \left[\frac{f_{32}}{\lambda_2} Z_2(t) + \frac{f_{23}}{\lambda_3} Z_3(t) \right]$$

(A3c)

$$\text{and} \quad G_{33} = \frac{2.22}{\lambda_3^2} Z_3(t).$$

(A3d)

In these equations λ_j is the decay constant of the jth decay product ($\lambda = 0.227\ \text{min}^{-1}$, $\lambda_2 = 0.0259\ \text{min}^{-1}$, and $\lambda_3 = 0.0352\ \text{min}^{-1}$);

$$f_{ij} = \frac{\lambda_i}{\lambda_i - \lambda_j}$$

(A4a)

$$\text{and} \quad Z_i(t) = (1 - e^{-\lambda_i t_o})\,(1 - e^{-\lambda_i (t - t_o)}). \tag{A4b}$$

Equation (A1) is inverted to obtain

$$I_j = \frac{1}{\eta V} \sum_{i=1}^{3} K_{ji} N_i, \qquad j=1\text{-}3 \tag{A5}$$

and the K-matrix elements are obtained by inverting the H-matrix.

Table I

Designation	Parameter
A	sampling time
B	first delay interval
C	first count interval
D	second delay interval
E	second count interval
F	post-measurement delay
G	operation mode*
H	filter currently under detector

*Decoded bit-wise

a	r	e	p	s	x	x	x

MSB LSB

a=1 → automatic recycle
r=1 → attempt error recovery
e=1 → echo commands and print errors
p=1 → print results at end of measurement
s=1 → turn on sampling pump during sampling interval
x → not used

Table I. Assignable parameters for automatic operation of the RDC. Parameters A-F may take values from 0 to 99 and are in units of 20 seconds. The operation mode is entered in hexadecimal and decoded as noted. The filter number can be 1-7.

Table II

Command	Function
[CTRL] A*	advance platter
[CTRL] B*	clear counters and start counting
[CTRL] C	print current contents of counters
[CTRL] D	print data memory bytes 29-64
[CTRL] H	print status and time remaining in current state
[CTRL] P	print output data message (same format as at end of measurement sequence)
[CTRL] Q*	stop counting
[CTRL] R	reset - re-initialize system
[CTRL] S*	start sampling pump and raise cylinder
[CTRL] T*	lower cylinder and stop sampling pump
[CTRL] X	go to idle - stop current operation but do not reinitialize parameters
[CTRL] Z*	start automatic measurement sequence

*may not be executed when the RDC is in automatic measurement sequence.

Table II. Radon daughter carousel commands.

Table III

Measurement Timing $[t_o, t_{1a}-t_{1b}, t_{2a}-t_{2b}]$ (min)	Radon Progeny Calculation Constants i	K_{i1}	K_{i2}	K_{i3}	L_i	Isotope	MMC'	Thoron Progeny Calculation Constants t_d	t_e
		($pCi \cdot dis^{-1} \cdot min^{-1}$)			($WL \cdot l \cdot dis^{-1} \cdot min^{-1}$)		(pCi/l)	($WL \cdot l \cdot dis^{-1} \cdot min^{-1}$)	
5, 5.33-12, 20-30	1	0.047326	0	0	4.875×10^{-5}	^{218}Po	0.6	1.55×10^{-4}	1.40×10^{-4}
	2	-0.005502	-0.025707	0.030377	-2.270×10^{-5}	^{214}Pb	1.5		
	3	0.000595	0.022289	-0.006583	8.906×10^{-5}	^{214}Bi	0.5		
5, 5.33-16, 26-45	1	0.040517	0	0	4.173×10^{-5}	^{218}Po	0.5	1.32×10^{-4}	1.13×10^{-4}
	2	-0.004951	-0.010871	0.014443	-0.634×10^{-5}	^{214}Pb	0.5		
	3	0.000618	0.014273	-0.004118	5.764×10^{-5}	^{214}Bi	0.3		
5, 5.33-18, 30-60	1	0.039130	0	0	4.030×10^{-5}	^{218}Po	0.5	1.22×10^{-4}	1.00×10^{-4}
	2	-0.004862	-0.006964	0.009152	-0.618×10^{-5}	^{214}Pb	0.3		
	3	0.000640	0.011941	-0.002916	5.032×10^{-5}	^{214}Bi	0.3		

Table III. Calculation constants and adjusted minimum measurable concentrations for the radon daughter carousel used with selected, optimized measurement timing. The five measurement times give the time of the end of sampling and the beginning and end of the first and second counting interval, respectively, all referred to the beginning of sampling. Equations 1-3 in the text give the relationships between radon progeny concentrations and radon and thoron progeny potential alpha energy concentration, and the counts observed.

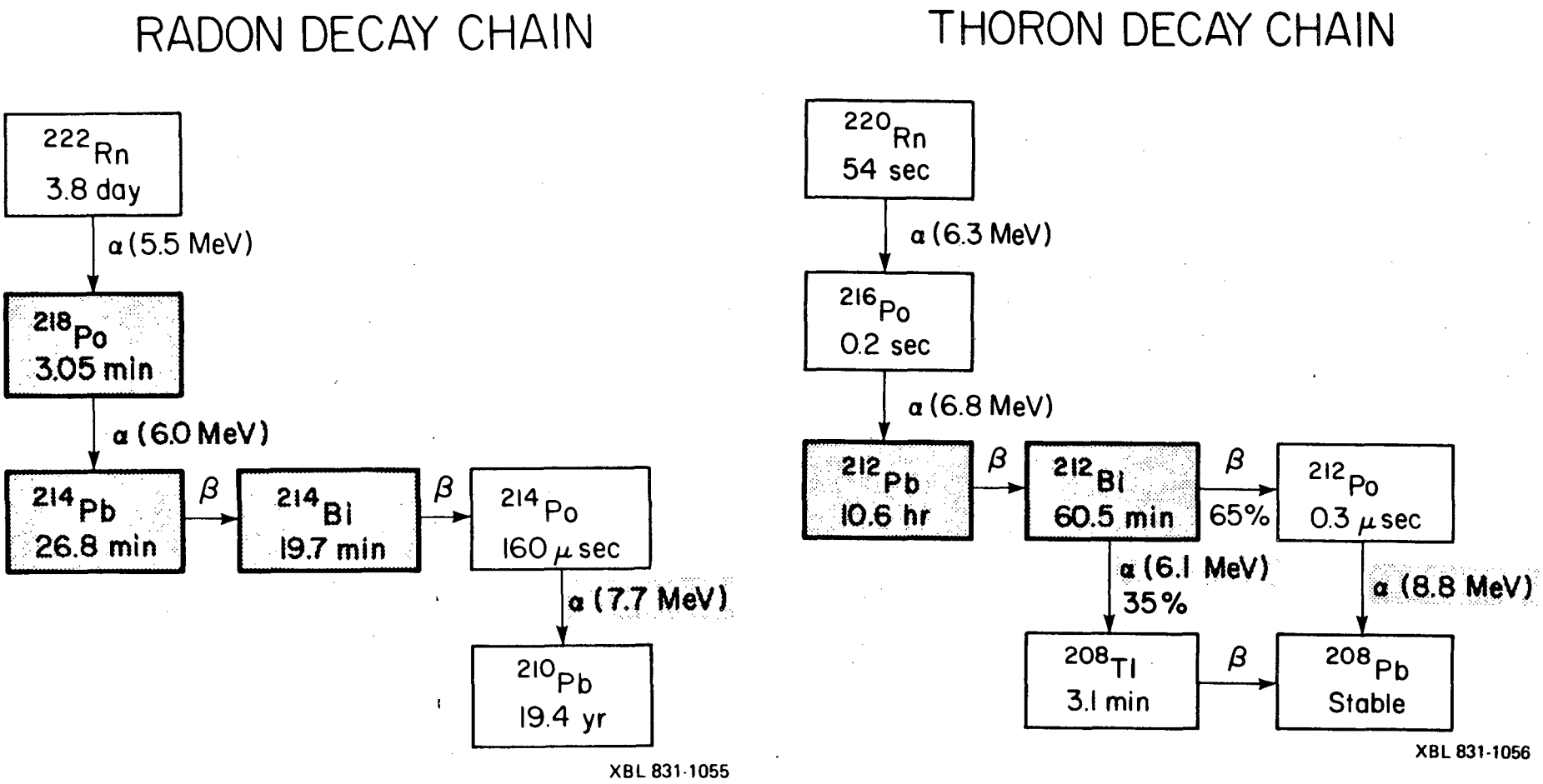

Figure 1. Decay chains of a) ^{222}Rn to ^{210}Pb and b) ^{220}Rn to ^{208}Pb, showing the half-life of each isotope, its mode of decay, and, for alpha decays, the decay energy. Inhalation of the shaded isotopes is the primary radiological concern: their half-lives are short compared with lung clearance times, and yet long enough to reach significant number concentration in air; their decay leads to an alpha particle emission before a stable or long half-life element is formed. The shaded alpha decays both cause the primary biological damage and are used to measure radon and thoron progeny.

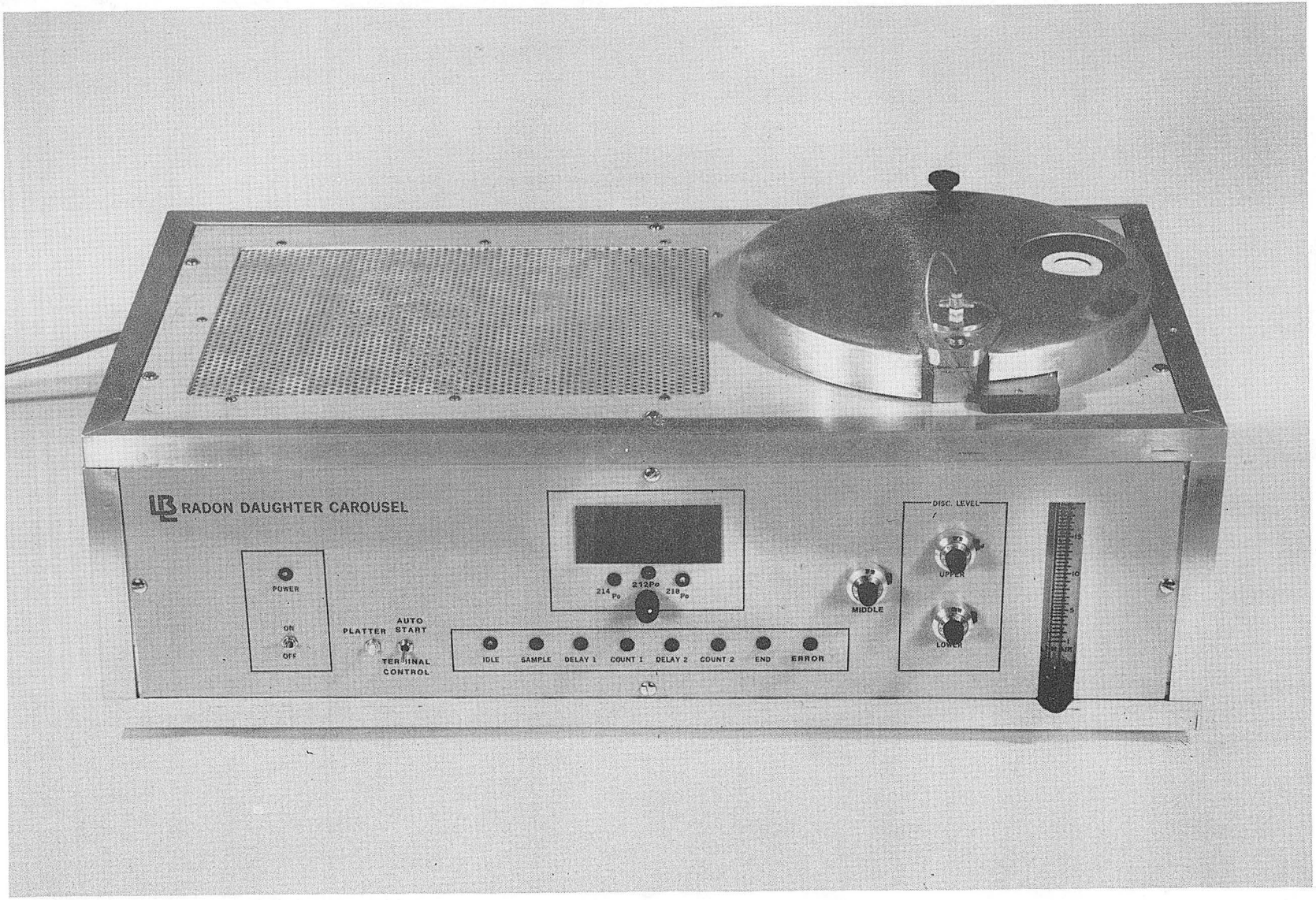

CBB831-386

Figure 2. The prototype radon daughter carousel. It measures 62 cm X 30 cm X 18 cm and weighs 22 kg.

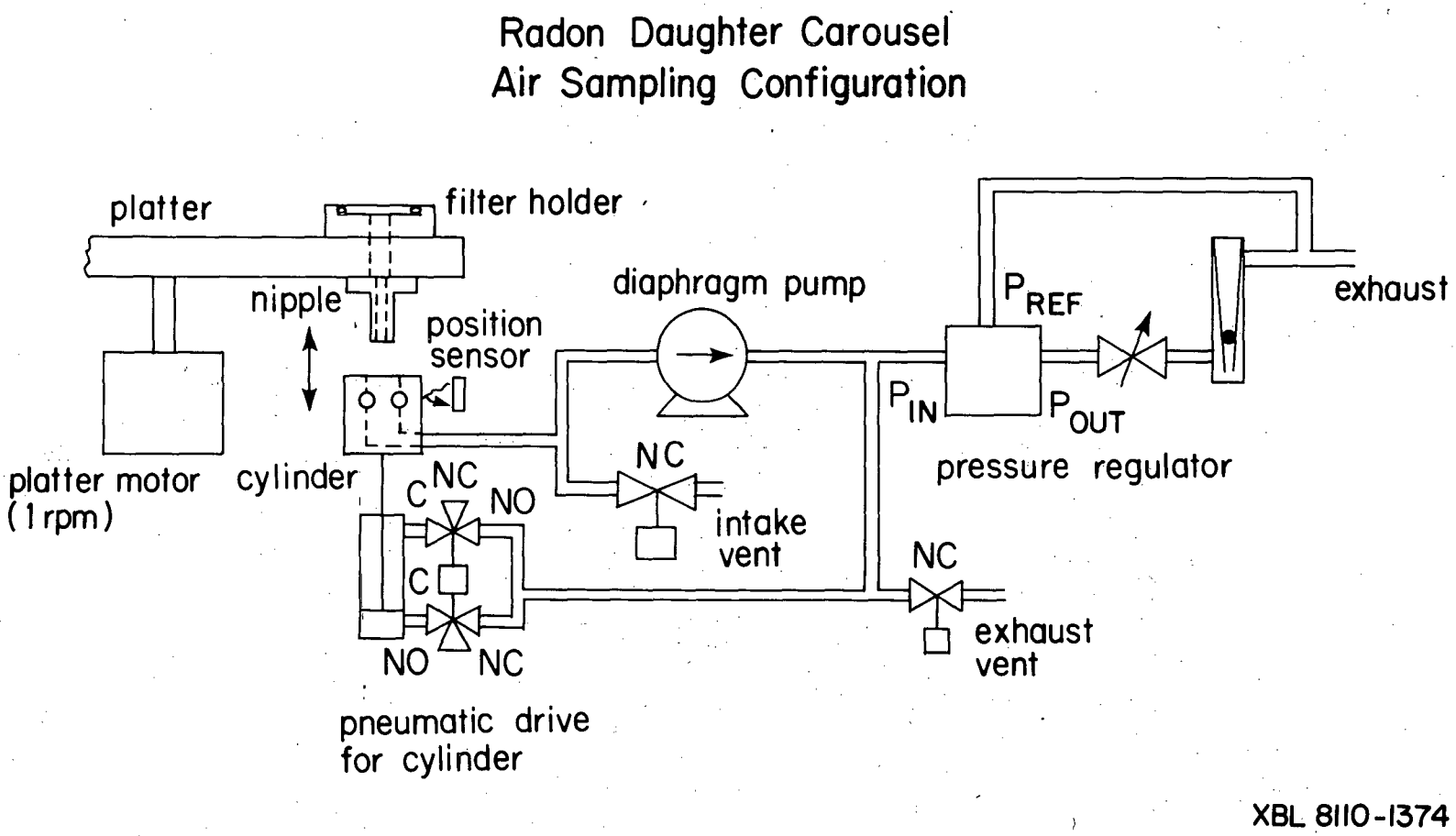

Figure 3. The air sampling design of the carousel. To start sampling, the intake and exhaust vents are opened briefly while the pump is started. The exhaust vent is then closed and the pneumatic drive activated to raise the cylinder to couple with the nipple. The intake vent is then closed to draw air through the filter.

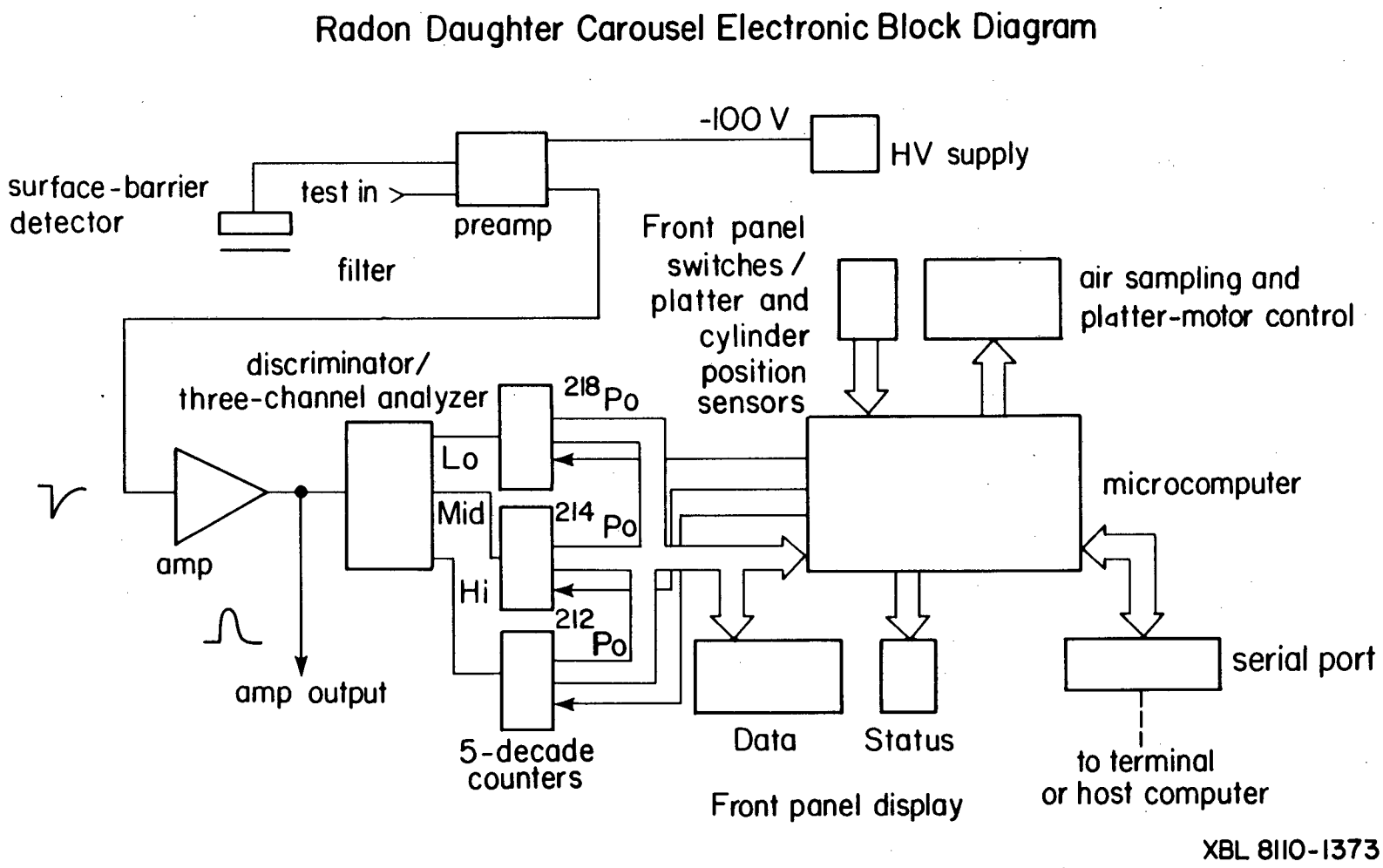

Figure 4. Radon daughter carousel electronic block diagram.

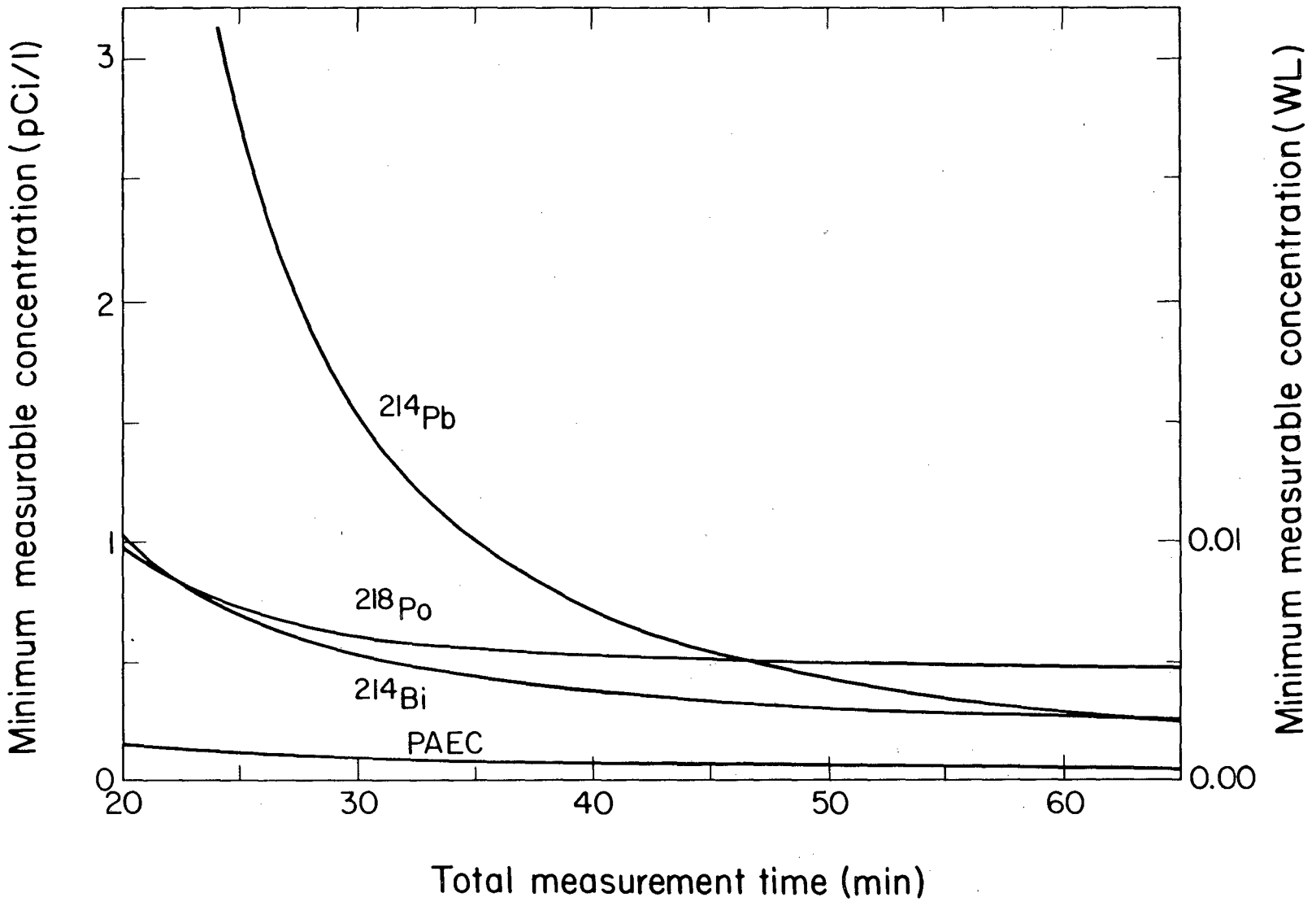

XBL 831-1054

Figure 5. Adjusted minimum measurable concentration of radon progeny, as defined in the text, vs. total measurement time for the two-count alpha spectroscopic technique. The sampling time and delay time before counting are 5.0 min. and 20 sec., respectively; the radon daughter activity ratios are ^{218}Po: ^{214}Pb: ^{214}Bi = 1.0:0.5:0.4; the product of detector efficiency and flow rate is 2.2 l/min.

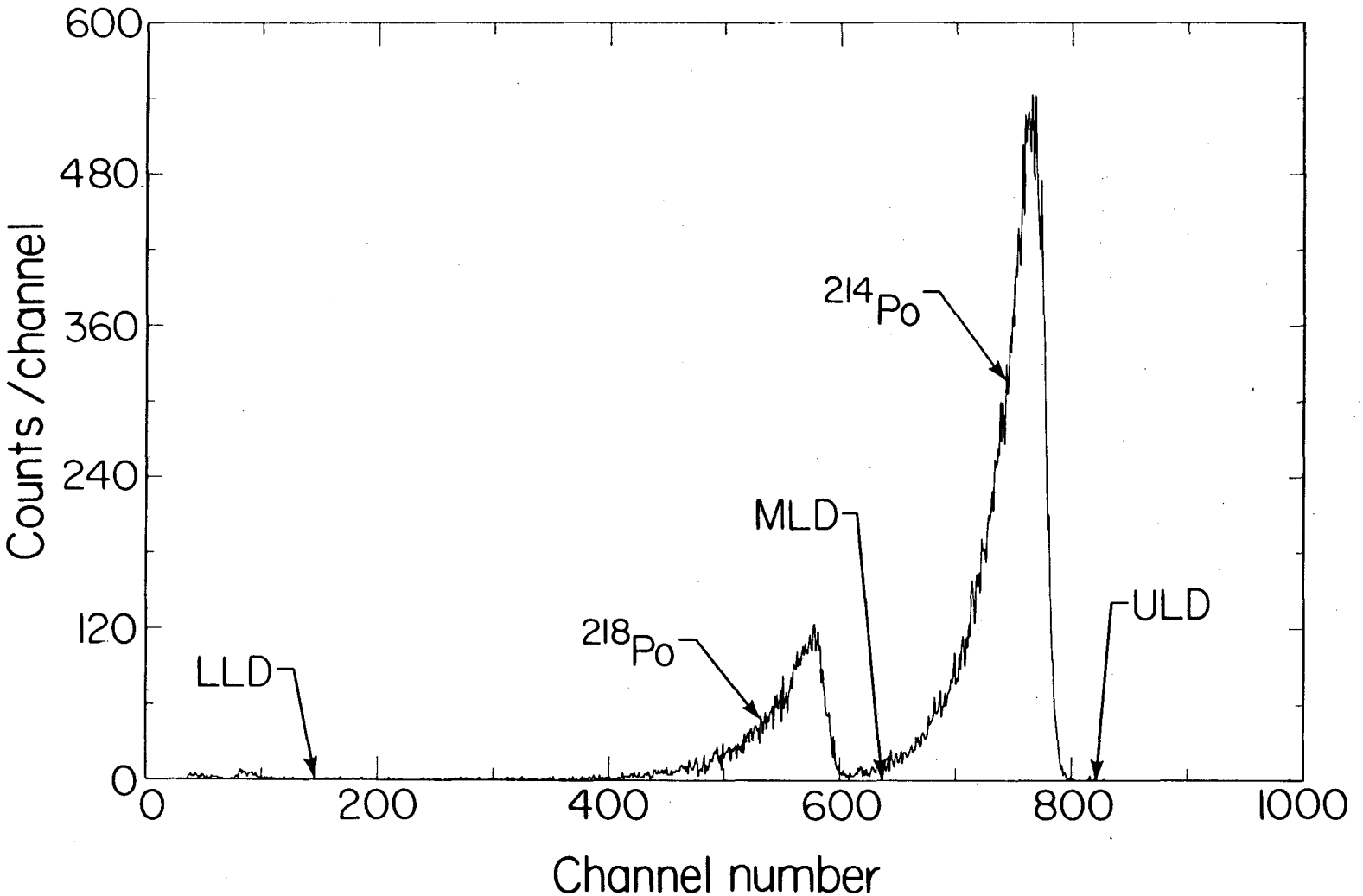

XBL 832-1210

Figure 6. Alpha spectrum for the radon daughter carousel showing settings of the thresholds on the three-channel analyzer. Pulses with amplitude between LLD and MLD are counted in channel A, between MLD and ULD in channel B, and above ULD in channel C. The energies of alpha particles striking the detector corresponding to these settings are approximately 1.5 MeV for LLD, 5.9 MeV for MLD and 7.6 MeV for ULD. Roughly 0.4 MeV is lost penetrating 5.7 mm of air. For this spectrum approximately 150 pCi/l of each decay product was sampled for 5 min at 8 l/min through a 0.8 μm-pore membrane filter. After a delay of one minute a 400-second spectrum was collected.

This report was done with support from the Department of Energy. Any conclusions or opinions expressed in this report represent solely those of the author(s) and not necessarily those of The Regents of the University of California, the Lawrence Berkeley Laboratory or the Department of Energy.

Reference to a company or product name does not imply approval or recommendation of the product by the University of California or the U.S. Department of Energy to the exclusion of others that may be suitable.

TECHNICAL INFORMATION DEPARTMENT
LAWRENCE BERKELEY LABORATORY
UNIVERSITY OF CALIFORNIA
BERKELEY, CALIFORNIA 94720