Submitted to Health Physics

LBL-1573
Preprint

c.1

TRITIUM INSTRUMENTATION FOR ENVIRONMENTAL AND OCCUPATIONAL MONITORING--A REVIEW

Robert J. Budnitz

June 1973

Prepared for the U. S. Atomic Energy Commission
under Contract W-7405-ENG-48

For Reference

Not to be taken from this room

LAWRENCE BERKELEY LABORATORY
UNIVERSITY OF CALIFORNIA
BERKELEY

LBL-1573

DISCLAIMER

This document was prepared as an account of work sponsored by the United States Government. While this document is believed to contain correct information, neither the United States Government nor any agency thereof, nor the Regents of the University of California, nor any of their employees, makes any warranty, express or implied, or assumes any legal responsibility for the accuracy, completeness, or usefulness of any information, apparatus, product, or process disclosed, or represents that its use would not infringe privately owned rights. Reference herein to any specific commercial product, process, or service by its trade name, trademark, manufacturer, or otherwise, does not necessarily constitute or imply its endorsement, recommendation, or favoring by the United States Government or any agency thereof, or the Regents of the University of California. The views and opinions of authors expressed herein do not necessarily state or reflect those of the United States Government or any agency thereof or the Regents of the University of California.

0 0 0 0 3 9 0 0 0 0 1

LBL-1573

TRITIUM INSTRUMENTATION FOR ENVIRONMENTAL AND OCCUPATIONAL MONITORING--A REVIEW

Robert J. Budnitz

Lawrence Berkeley Laboratory
University of California
Berkeley, California 94720

ABSTRACT

The aim of this review is to provide an overview of the techniques which have been developed for measuring tritium in various media. The main emphasis is on measurements for surveillance and protection in environmental and occupational situations. Tritium measurements in specialized research applications are not treated in detail. Overviews are first provided of the physical characteristics of tritium; of the sources of and typical levels of tritium concentrations in the natural environment; and of the radiation protection guides. The various measurement techniques are then discussed.

1. INTRODUCTION

Tritium (the hydrogen isotope of mass 3) is one of the most important radioactive nuclides released to the environment during the normal operation of light water nuclear reactors and their fuel reprocessing plants. Tritium is produced principally in ternary fission in the reactor core and to a much lesser extent by activation of the primary cooling water. The fission yield of tritium (tritium atoms per fission) is about 0.01%[1], and in fuel ready for reprocessing ($\lesssim$ 150 days of cool-down(it is present at the level of about 700 curies/metric ton of fuel.[1] Tritium is also produced by neutron irradiation of the deuterium, ^{3}He, ^{10}B, and ^{6}Li in the reactor coolant[2]; Table I (from Ref. 3) shows the estimated tritium production (Ci/yr) at typical nuclear power stations of the boiling water (BWR) and pressurized water (PWR) types. Essentially all of the tritium produced is ultimately released to the environment, either at the reactor or most probably during fuel reprocessing. Tritium appears predominantly as tritiated water (HTO), and to a lesser extent as hydrogen gas (HT). With the use of Zircaloy-clad fuel rods in light-water reactors, tritium diffusion from the spent fuel should be very small ($\lesssim$ 1%), so that most of the release occurs at the fuel reprocessing plant.[4] With the increasing number of nuclear power plants, the world-wide inventory of tritium is expected to rise dramatically. One projection is shown in Figure 1 (from Ref. 1).

Tritium is also produced at heavy-water reactors and at tritium production facilities, at which its relative importance is generally greater than that of all other radionuclide hazards combined.[4]

Tritium's radioactive decay has a half-life of 12.36 years. The decay is by β^- emission. Figure 2 (from Ref. 5) shows the beta energy spectrum. The very weak beta has a maximum energy of 18.6 keV and a most probable energy of 5.7 keV. (The maximum range of an 18 keV beta is about 6 microns in water or 0.5 cm in air.) There is no other decay mode. One gram of pure tritium would have an activity of about 9600 curies.

Tritium appears naturally in the environment at an estimated world-wide level of from 20 to 60 megacuries (Ref. 4), corresponding to a mass of 2 to 6 kg. All but a fraction of one percent is in the form of HTO in the air and water. The fractional atomic concentration relative to ordinary hydrogen is about 4×10^{-15} (HT/H_2) in the atmosphere; about 8×10^{-17} (HTO/H_2O) as vapor in air; and about 1×10^{-18} in surface water.[4] Most of the naturally-occurring tritium is produced by interactions in the upper atmosphere of the primary cosmic ray protons.[6]

Production of tritium by atmospheric nuclear tests has dwarfed the natural levels: the tritium yield of a thermonuclear reaction (fusion) has been estimated at about 1 kg per megaton equivalent.[4, 7] Essentially 100% of the tritium produced in this way is converted to HTO water vapor.[8] The concentration in stratospheric water of tritium rose from about 0.03 pCi/cm^3 (in the period prior to nuclear testing) to about 20,000 pCi/cm^3 in 1960, an increase of almost six orders of magnitude.[4] Although it is chemically identical to normal hydrogen for most purposes, stratospheric tritium may not mix quickly and thoroughly with much of the naturally-occurring water.

For 168-hour occupational exposures, the International Commission on Radiological Protection[9] has established maximum permissible concentrations in air and water $(MPC)_a$ and $(MPC)_w$, as well as maximum permissible body burdens (MPBB). For individuals in the general public, the applicable MPC values are a factor of 10 smaller than for occupational exposure; and for exposure to a suitably large sample of the general public, another factor of 3 smaller still. The U. S. Atomic Energy Commission[10] has established MPC levels identical to those of the ICRP.

The occupational MPBB values are 1 mCi of HTO in body tissue, or 2 mCi in the total body. The MPC values are as follows:

	168-hour occupational limits	168-hour limits, individuals in general public	
as HTO in water	30,000 pCi/cm^3	3000	pCi/cm^3
as HT gas in air	400 pCi/cm^3	40	pCi/cm^3
as HTO vapor in air	2 pCi/cm^3	0.2	pCi/cm^3

In terms of curies, these permissible levels seem at first glance to be very high in comparison to MPC levels for other radionuclides. There are three reasons for this: first, there is a large amount of water in biological systems, in which ingested tritium can be diluted; second, there is no known biological or physical reconcentration mechanism; and third, the tritium betas have very low energy.

Tritium's most important biological half-life seems to be about 8 to 10 days in humans[11, 12, 13], which is similar to that of the gross

water content of the body. There is evidence for a longer half-life (~ 300 to 500 days) for a few percent of the tritium, but the contribution to the total dose of this component is uncertain.[11]

Measurements of tritium are difficult mainly because of the low energy of the tritium betas, which can be counted by only a few of the many detectors sensitive to ionization energy loss. The discussion below is intended to point out the advantages and disadvantages of the various existing (or proposed) measuring systems for tritium.

We shall concentrate upon measurements in the air and water around nuclear reactors and their fuel-reprocessing plants. We do not intend to imply that tritium is not now a significant problem outside of the reactor industry. Its use is increasing in medical and biological research as a tracer, and in industrial applications. A recent study[14] of tritium's use in luminous watch dials is interesting, if only because of its historical connection with the problem of the radium dial painters of several decades ago. A recent study of the United Kingdom[15] indicates that tritium is widely used in industry and that "the radiation doses received by some workers are not inconsiderable." What was found was that a few percent of the workers studied received doses less than but comparable with MPC levels. Background information on the use of tritium in biology and medicine can be found in a recent book.[16]

We will consider four distinct measurement problems: determinations in water, in air as HTO, in air as HT, and in urine. In turn, any of these (except that in urine) can be made in either environmental samples or process samples (water flow or gas stack). We shall attempt to discuss these various classes separately, where appropriate.

Various interferences must be considered depending on where, when, and how the tritium concentration is being sampled or measured. In the gas phase around fuel reprocessing plants, the principal beta emitter besides tritium is ^{85}Kr, whose higher energy beta (E_{max} = 672 keV) can provide a significant interfering background. In the liquid phase, strontium-90 (E_{max} = 546 keV) is present and may interfere.

The literature on tritium measurements is voluminous, more so than perhaps for any other radionuclide of interest in environmental measurements. The IAEA held a Symposium in 1961, the proceedings of which[17] are a basic reference in this field. A tritium Symposium was held in Las Vegas in September, 1971[18], in which the major research groups in the field summarized the current status of instrumentation at that time. Also, a monograph by Jacobs[4], part of the A. E. C. Critical Review Series, is an excellent reference on the sources of tritium and its behavior in the environment. Two recent bibliographies by Hannahs and Kershner[19], and by Rudolph, Carroll, and Davidson[20] are also valuable.

In the literature on tritium, one frequently encounters the use of the Tritium Unit (TU) or Tritium Ratio (TR), defined as a tritium concentration of 1 tritium atom in 10^{18} normal hydrogen atoms. A concentration of 1 TU in water corresponds to 3.23×10^{-3} pCi/cm^3 of water, or alternatively 0.12 dps/liter.

Another notation which often appears is the designation 'protium' for normal hydrogen (^1H), to distinguish it from deuterium (^2H) and tritium (^3H). The three isotopes are also commonly denoted by H, D, and T.

2. TRITIUM IN WATER

In water, tritium occurs primarily as HTO (tritiated water). It is also occasionally found in tritiated organic compounds dissolved or suspended in water, but we shall not discuss the measurement of these cases except when their measurement is contained within the measurement of HTO itself.

As mentioned above, the maximum permissible concentration $(MPC)_w$ of tritium as HTO in liquid water for an individual in the general population is 3000 pCi/cm^3. This MPC corresponds to 110 disintegrations per second per cm^3 (dps/cm^3). The main measurement problem is the low energy and range of the beta (the maximum range in water being 6 microns).

A. Liquid Scintillation Counting

Efforts to obtain sensitive, reliable measurements have essentially all relied on one technique: liquid scintillation counting. There are many liquid scintillation systems in the literature and several are available commercially. Here we shall try to summarize the properties of the various liquid scintillation systems. Two recent books are excellent references on this subject.[21, 22]

Liquid scintillation counting relies on the fluorescence of scintillator molecules excited by the deposition of ionization from the beta. Energy given to solute molecules by the β is transferred to a fluorescent molecule which it excites. A photon is emitted when the excited molecule returns to its ground state. For most common scintillator

solutes, the fraction of excited molecules which de-excite by photon emission is about 90%. The photons emitted are detected by a multiplier phototube (MPT), or in the case of tritium nearly always by a pair of MPT's in time coincidence.

A good discussion of this technique has been given by Horrocks:[23]

> "The main advantage obtained from the use of liquid scintillation counting as opposed to other conventional counting methods has to do with the fact that the sample containing the radioactivity is in intimate contact with, and in most cases dissolved in the detector. This produces the ideal 4π geometry. A limiting factor in the liquid scintillation counting system is the MPT. Even the best MPT's have photocathode efficiencies for conversion of photons into electrons of only 28% . . . .
>
> "The liquid scintillator solution consists of three main parts. The bulk of the solution is the solvent, usually an alkyl benzene (i.e., toluene) or dioxane. To the solvent an organic compound (or compounds) is added which is an efficient photon emitter and which emits photons in the wavelength region which is easily measured by the MPT. And finally the liquid scintillator solution contains the sample . . . . The most troublesome problem encountered with liquid scintillation counting involves those problems associated with the introduction of the sample into the scintillator solution in a homogeneous (or near homogeneous) form without causing a drastic reduction in

photon emission due to so called quenching processes . . . . "There are two basic types of quenching; chemical and color. Chemical quenching involves the action of foreign materials upon the excited molecules; either solvent or solute molecules . . . . Color quenching involves the re-absorption of emitted photons by foreign material which may be present in the liquid scintillator solution or sample."

Recent papers by Moghissi et al. have studied the significant factors which affect low-level liquid scintillation counting of tritium, both in homogeneous liquid systems such as solutions[24], and in emulsions.[25] From the paper on homogeneous solutions[24], several conclusions are important:

(a) Plastic vials are preferable to glass vials; "glass seems to decrease the counting efficiency for tritium counting and increase the background as compared to plastic."

(b) The solution which optimizes counting efficiency is 6 to 7 g of PPO, 1.2 to 1.5 g of bis-MSB, and 120 g of naphthalene per liter of dioxane. [PPO is 2, 5-diphenyloxazole; bis-MSB is p-bis-(o-methylstyryl)-benzene.] Various studies of concentrations were conducted to determine this optimum.

(c) In this solution, the optimum water content is about 1 ml water/4 ml solution. There are two competing processes here, namely that additional water increases quenching at the same time that it increases the proportion of water which contains the activity.

(d) Phosphorescence is severe, and "in considering the long-lived component of phosphorescence, it is desirable to avoid any light which might excite the scintillation solution."[24]

(e) A constant check of possible instrument drift is required for precise measurements. "The recommended order of counting is: background, sample, standard calibration sample, duplicate of sample, background."

(f) "The preparation of water samples is simple and consists of a single distillation." (In fact, some samples require no distillation at all.)

(g) The Y-value (defined as minimum detectable activity at a confidence level of one sigma of statistical error for one-minute counting time) is about 1 pCi/cm^3.

Even more sensitive systems are available, using emulsions. Lieberman and Moghissi[25] report a Y-value of 0.7 pCi/cm^3 using the detergent Triton N101 (Rohm and Haas Co.) in scintillation solution at a ratio of 1:2.75. This mixture can hold 40 to 50% water, when the scintillation solution is p-xylene containing 7 g PPO and 1.5 g bis-MSB per liter. This cocktail has a counting efficiency of ~23% for the tritium beta. By using three photomultipliers viewing a large-volume (250 ml) vial, Moghissi[26] has achieved a Y-value of 0.2 pCi/cm^3.

Calibration and standardization of systems as sensitive as these are difficult problems. The U. S. National Bureau of Standards has tritiated-water and tritiated-toluene standards.[27] The most frequently used calibration method is the 'internal standard', in which a standard activity (e.g., from NBS) is used interchangeably with the unknown

samples. The problem is that the addition of a standard can change the counting efficiency, due to differences in quenching. This problem can be overcome by the addition of a very small (microliter) amount of a high-activity standard to a previously counted sample, but accurate measurements of small size samples, usually made gravimetrically, are difficult and tedious.

Moghissi and Carter[28] have used two samples which differ only in that one employs normal and the other tritiated naphthalene. This minimizes most of the errors due to chemical differences.

Another method is to use one or more radioactive gamma sources placed outside of the counting vial (the so-called 'external standard method'). These can be used to adjust the gain on the photomultiplier tubes, or to partially compensate for differences in quenching characteristics among several samples in a train. Systems with automatic feedback control, using radioactive sources, are available from some of the commercial liquid-scintillation manufacturers. Both the American Public Health Association's Standard Methods[29] and the American Society for Testing and Materials compilation[30] contain standard methods using liquid scintillation counting for tritium analysis.

B. Tritium in Flowing Water

Measurements in flowing water can, of course, be made by taking grab samples for batch counting. A continuous flow-system with continuous measurements would be more desirable for many measurement situations. The requirements of such a system are that it be sufficiently sensitive and precise; that it respond in time comparable with the

characteristic time for a change in tritium concentration in the flowing water; that it sample properly; and that it not be too expensive nor require excessive maintenance.

Ting and Litle[31, 32] have reported on a continuous flow system, developed at Beckman Instruments for use in the secondary coolant of a pressurized water reactor. When the device was field-tested, the tritium levels in this coolant at the San Onofre Nuclear Generating Station[32] were in the region of 1500 pCi/cm^3 (about half of the MPC), measured with a few-percent precision.

The system works by mixing toluene-based liquid scintillator (or dioxane-based scintillator if very rapid mixing was required) with the liquid water sample in a mixing chamber; the mixed solution flows through a light trap, a liquid scintillation counter, and then out as waste. The difficult part of the system is the mixing chamber. Liquid scintillator flows continuously into a vial; the water sample enters the vial by dripping gravity flow, and is stirred for thorough mixing twice before exit. Time response is remarkably good: Figure 3 (from Ref. 31) shows the response to 5 tritium samples of 10, 20, 30, 40, and 50 μl, injected instantaneously with a scintillator flow rate of 7.0 ml/min. Residence time was less than two minutes in the test, and the total response peak is over in about 4 minutes, as seen in Figure 3. The efficiency for detection of the tritium beta is 32%. The sample flow rate is 0.5 ml/minute, and the minimum detectable tritium concentration is about 25 pCi/ml. This system shows great promise for the continuous monitoring of tritium in flowing water. Its main drawback is the high operating cost from consumption of liquid scintillator: at 7

ml/minute (~ 10 liters/day), the annual cost of liquid scintillator can be in the range of $ 9000 to $ 15,000 ($ 3 to $ 5 per liter).

C. Urinalysis

The most common procedure for the determination of tritium body burden is radioassay of tritium (as HTO) in urine. Chronic exposure of workers to air containing HTO vapor at the A.E.C. recommended occupational MPC level will produce tritium activity of about 30,000 pCi/cm^3 of urine.[33, 34]

Levels down to the 10 pCi/cm^3 region can be measured routinely with liquid-scintillation counting,[35] using an emulsion technique similar to that described earlier.[25] Thus sensitively is not a problem for analysis in the laboratory. For rapid measurements, which are sometimes required after possible large accidental exposures, Osborne has developed an automatic liquid-scintillation urine analyzer.[36] This system provides a measurement two minutes after the sample is introduced, with a minimum sensitivity of about 1000 pCi/cm and measurements up to 10^7 pCi/cm^3 with precisions of about ±10%. This device is particularly useful to assess a possible HTO exposure immediately after an accident.

One difficulty with urinalysis is the possible quenching due to foreign substances in the sample. This is the reason that the p-xylene-based emulsion technique is preferred over the homogeneous-solution method.[35] Alternatively, one can distill the urine before determining the tritium activity level in any of the conventional dioxane-based systems.

Block, Hodgekins and Barlow[37] have developed a proportional counter technique which can detect 1000 pCi/cm^3 and is relatively simple (Block et al., 1971). The system is based on the reaction of water and calcium carbide to form acetylene as follows:

$$CaC_2 + 2H_2O \rightarrow C_2H_2 + Ca(OH)_2$$

Tritiated water yields tritiated acetylene (C_2HT), used as a counting gas in the proportional counter. This system is attractive particularly for its adaptability for use in the field, despite the fact that its sensitivity is much less than that of the liquid scintillation systems.

Sandia Laboratories[38] have developed a urinalysis capability using metallic calcium to reduce the water in urine; a sealed ion chamber is filled with the evolved hydrogen. The main advantage of the instrument (the T-449) is an immediate analysis capability for use in emergency accident situations. The calcium cartridge is disposable, and the instrument makes determinations in five minutes, with ±15% accuracy (2σ) down to levels of 10,000 pCi/cm^3. This instrument is portable (8 kg), and is useful for field use in case large exposures occur in a remote location.

D. Solid Scintillation Counting

Although liquid scintillation counting has been the most commonly used technique for tritiated water measurements, plastic scintillation systems are also used. These systems have several drawbacks compared to the liquid-scintillation systems, but two advantages: first, plastic scintillation systems provide faster response than the liquid methods;

and second, the liquid system can be expensive due to consumption of large amounts of the organic solvents and solutes, which must be disposed of after use.

One needs a high surface-to-volume ratio, and the early systems used small crystals of anthracene. More recently, various kinds of detectors using thin sheets or layers of anthracene or plastic scintillator spread over lucite (for light piping) have been described. Figure 4 shows one such detector[39], in which 100 rods of lucite are coated with anthracene powder. The counter can detect 1000 pCi/ml of water at a rate of 10 cpm. To measure urine, the sample must be decolored by passage over a charcoal column. The response to tritium in air is 20 cpm for 1 pCi/cm^3 of air. In an unshielded laboratory environment, the normal external background gamma levels were at about 30 cpm.

Osborne[40] has developed a plastic detector, shown in Figure 5, with the sensitivity of 24 cpm for 1000 pCi/cm^3 of water. At this counting rate, small fractions of an $(MPC)_w$ can be detected easily. For tritium in air, about 0.01 pCi/cm^3 can be detected. The background is about 40 cpm.

The main problem with plastic detectors is that over a period of time the plastic surfaces tend to degrade because of sedimentation, bacterial growth, and discoloration. Any of these can produce large decreases in counting efficiency because of the difficulty in light collection through the thin light paths. The detector can sometimes be cleaned, but not always. At present, this technique does not compare favorably with liquid scintillation counting for effluent water monitoring, although when specific activity is high and the water sample is pure it can be

used satisfactorily.

3. TRITIUM IN AIR

In air, tritium occurs primarily in two forms: as water vapor (HTO) and as hydrogen gas (HT). Tritiated organic compounds in the vapor phase and on particulate matter also occur occasionally.

There are two common approaches to measurements in air: first, one can use an ionization chamber or gas proportional counter with filtered air introduced for internal counting; the tritium betas produce ionization within the sensitive chamber volume. This method is sensitive to tritium in all of its gaseous chemical forms. Secondly, HTO vapor can be removed from the air with a bubbler or with some dessicant such as silica gel or a molecular sieve, and the resulting tritiated water counted using one of the liquid or plastic scintillation techniques. To measure tritium as HT or in tritiated organics, it is possible to burn the gas, converting the tritium to HTO before dessication and counting. We shall discuss each of these methods in turn.

A. Ionization Chambers

The earliest tritium detector for stack effluent measurements was the Kanne chamber[41, 42, 43], developed in the early 1940's. The gas to be measured is drawn continuously through an electrostatic precipitator or ion trap, then into a large ionization chamber. The resulting current is measured with a picoammeter. Large chambers of volumes 18.5 and 51.5 liters are in common use at Savannah River Laboratory[44]; they have minimum sensitivity limits (2σ) of 7 and 2 pCi/cm^3 in air, respectively.

We quote from Marter and Patterson:[44]

> "Although these instruments are sensitive to unusual particulate air loading, external gamma radiation, and other radioactive gases, these problems are reduced by filtering the air intake, by locating the chambers in areas of low gamma background, and by using moisture traps between two chambers in series, respectively."

One important problem with ionization chambers is the background in the presence of external gamma fields .... there is no way for a single ion chamber to differentiate between external gammas and internal betas (or internal γ's or α's). The background is such that 1 mR/hr of gammas is about equivalent to 100 pCi/cm^3 of tritium in air.[45] To reduce this problem, one common procedure is to place two identical chambers side-by-side, one sealed and the other open to the ambient air.[46] This reduces the interference by a factor of 50 to 100.[45] The limitation is in maintaining identical air masses in the two chambers in the presence of fluctuations in ambient pressure, temperature, and humidity.

If the gamma flux is directional, chambers adjacent to one another may not sample the same flux. This problem is reduced in a design by Osborne and Cowper[47] in which the compensating chamber is placed inside the active chamber to provide equal response in all directions. A 40-liter chamber of this design has a minimum detectable limit (2σ) for tritium at levels as low as about 1 pCi/cm^3 of air. Instruments with 0.3 and 1.2 liter volumes have also been constructed.[48]

Interference by other gaseous radionuclides is also a major problem for ion chambers. Particulates may be eliminated with filters, but radioactive noble gases (e.g., ^{41}Ar, ^{85}Kr) are inert and difficult to discriminate against. Each disintegration of ^{85}Kr produces many times the ionization of a tritium disintegration. This major disadvantage is what makes an ionization chamber inappropriate unless tritium is known to be the only significant radionuclide present. To overcome this, Osborne has reported the development of two chambers identical except that one has "a self-renewing drying system so that continuous subtraction (tritium + noble gases minus noble gases) can be accomplished."[49]

Waters[50], in a review of general problems with ion chambers, reports that factors such as cigarette smoke, ions, aerosols, humidity, and memory effects can also cause erroneous readings in ion chambers. He suggests the use of a micron pore size filter followed by an electrostatic precipitator. Also, materials such as rubber and some plastics[51] are particularly susceptible to absorption of tritiated water vapor, causing a low reading; later re-emission or exchange with ordinary water vapor then produces an error in subsequent measurements. Waters reports that: "Teflon is satisfactory but is difficult to use because of its tendency to cold-flow under pressure."

For monitoring tritium in air, the ionization chamber is undoubtedly the most commonly used instrument. Portable flow-through instruments of various sizes (typically with about 1 liter chamber volumes) have been a mainstay in health physics despite the problems discussed.

Perhaps the most sophisticated instrument of this type is the Sandia T-446[38], now available from Bendix Corporation.[52] This

instrument is expensive (over $5000) but provides a collection of features which makes it almost ideal for monitoring in those applications where accident-warning instrumentation is needed. The ion chamber output current is fed to a vibrating reed electrometer, then amplified and measured. All electronics are solid-state, on printed circuit boards. If is sensitive down to about 5 pCi/cm^3 of air and up to 10 μCi/cm^3 in seven decade ranges with automatic range changing. It employs an electrostatic precipitator, and has a 200 μCi ^{63}Ni source plated to one electrode of the precipitator. Ionization created by the source is used for self-contained calibration when the precipitator is turned off. There are two adjustable alarm levels which can be used to distinguish between immediate hazards and levels in the region of a few occupational $(MPC)_a$. The instrument is either portable (batteries) or alternatively the detector can be used in remote-sensing situations; it has a fail-safe failure indicator, automatic range changing, a filter to eliminate ionizing aerosols, and other features. The T-446's principal disadvantages besides the high cost are a sensitivity to external gamma fields and radioactive gases which is common to all ion chambers.

B. Proportional Counters

The gas proportional counter differs from the ionization chamber mainly in two respects: it is a pulse counting instrument, and it requires a particular filler gas to which the sample of (tritiated) air is added. It offers an advantage over the ion chamber in that energy discrimination is possible by electronic discriminating on the output pulse height, whose size is proportional to the energy deposited. The essensial disadvantage of the gas proportional counter is the continual

consumption of counting gas, which is discarded after being mixed with the tritiated sample and counted.

Driver[53] built a tritium counter of this type as early as 1956. More recently, Ehret[54] has achieved a minimum detectable concentration (2σ) of 0.1 pCi/cm^3 of air, using a chamber of about 1 liter volume with methane as the counting gas, to which is added 20 to 30% air. "Air is pumped through the counter by means of a small membrane pump. At the counter inlet methane is added to the air within a small mixing chamber."[54]

In this design, there must be a compromise between speed of response and inordinate consumption of methane. Using a methane flow rate of 25 liters/hour, a response time of a few minutes can be achieved. Ehret's design also includes an anti-coincidence proportional counter surrounding the tritium-sensitive counter, to discriminate against the longer-range betas of ^{41}Ar and ^{85}Kr. This counter suffered from "memory effects" due to absorption of tritiated water vapor (HTO) in plastic tubes, an effect mentioned earlier. Use of Teflon should eliminate this problem.

Block, Hodgekins and Barlow[37] have built a large-area, thin window gas-flow proportional counter system: two counters are identical except that one has an aluminized mylar window opaque to tritium betas while the other has a Formvar windown thin enough to allow detection of tritium. This system can thus compensate not only for gamma background but also for the beta activities of ^{41}Ar and ^{85}Kr. The window is porous to the counting gas (propane), and the flow occurs because of a positive pressure inside the counter. The counting volume is 0.2 liters.

The window is permeable to T_2O and HTO (but not to HT or T_2). In a gamma flux of 3 mR/hr, the counter had a minimum sensitivity in the region of about 1 pCi/cm^3.

C. Silica Gel/Liquid Scintillation

The use of silica gel as a desiccant to remove moisture (H_2O, HTO) from air before liquid scintillation counting is a common technique for tritium determinations in air. In fact, it has been proposed as a "Tentative Method for Analysis for Tritium Content of the Atmosphere" by the Intersociety Committee for a Manual of Methods for Ambient Air Sampling and Analysis.[55] Its main advantage is its extremely high sensitivity.

In the Intersociety Committee procedure, a 30 cm × 3.1 cm diam. aluminum cylinder is filled with silica gel (180 g). Silica gel can absorb moisture up to 40% of its own weight. Air is pumped at about 100 to 150 cm^3/minute through the silica gel column, which collects essentially all of the moisture. With this much gel, a continuous sample can be taken over as long as a two-week period; of course, a smaller set-up can be used for shorter sample-collection times.

Following the sample collection, the silica gel is heated in a distilling flask to remove the moisture. The distillate is then counted using the liquid scintillation technique of Moghissi et al.[24] A sample of air at 30°C (86°F) and 100% relative humidity will yield 6600 pCi/cm^3 of moisture when tritium (as HTO) is present at the $(MPC)_a$ concentration of 0.2 pCi/cm^3 for individuals in the general public.[55] Also, the system has negligible interference from other radioactive nuclides, because they do not absorb on silica gel and further are eliminated in the

distillation process. The largest source of systematic error is the uncertainty in the volume of air sampled and the prevailing temperature, pressure, and relative humidity of the air. Also, tritium as HT gas is completely excluded by this method.

Osloond et al.[56] have reported a detection limit (2σ) of 2×10^{-5} pCi/cm^3 of air by counting the silica gel directly (without distillation) in the liquid scintillation system.

The chief drawback of this system is the fact that concentrations are integrated over a long time period (hours to days), and that each batch analysis requires a separate procedure in the laboratory. The advantages are that its sensitivity and precision are excellent, and it suffers from almost no interferences. Another drawback is that the desiccant must be renewed periodically, and this must be done before it becomes saturated.

D. Bubbler Exchange

Osborne[45] has removed tritiated water vapor (HTO) from air using a water-filled gas washing bottle ("bubbler"). Moist air is bubbled through water, and exchange occurs between the vapor and liquid stages. It is easy to sample a known volume of air so that the overall collection efficiency is within a few percent of 100%. For example, Osborne cites sampling for 10 hours at 10 cm^3/sec (or for 1 hour at 100 cm^3/sec) through 200 cm^3 of water with an overall collection efficiency of 96-97%. One advantage of this method is that tritiated hydrogen gas (HT) is selectively eliminated: in a bubbler system studied at Los Alamos, the collection efficienty for HT was $< 0.1\%$ under conditions in which HTO collection efficiency was 90 to 95%.[57] Also selectively

eliminated are noble gases: in Osborne's example[45], "the ratio of noble gas activity to tritium activity in the water would be <0.013% of the average of the ratio in the sampled air." A typical bubbler system is somewhat less sensitive than the desiccant approach, with minimum detectable activity being in the region of 0.1 pCi/cm^3; however, this sensitivity may be acceptable in many situations, given the convenience of the method.

Osborne[45] has also described a method in which the bubbler can be tied onto a tritium-in-water liquid scintillation detector for continuous monitoring. Many elements of this system would then be very similar to that described above in the discussion on "Tritium in Flowing Water."

E. Combustion for HT Determinations

Techniques have been developed for the separate determination of tritium in air as HTO (water vapor) and HT gas. We shall discuss two different techniques here.

Griffin et al.[58] have determined HTO and HT separately, using a technique whose flow train is shown in Figure 6. Because HT (or H_2) in the gas to be measured is present at very small levels, tritium-free H_2 gas is added as a carrier. The moisture (including HTO) is then removed in Air Dryer #1, consisting of Drierite-brand anhydrous calcium sulfate in Plexiglas cylinders.[59] The dry gas is combusted in a catalytic burner: all combustable compounds are oxidized with the help of a 0.5% platinum on 3-mm diameter aluminum oxide pellets, at a temperature of 400° C maintained by a heating jacket. Not only HT, but also tritiated organics (such as CH_3T, etc.), are converted to HTO in this step.

The HTO is then removed from the flow by Air Dryer #2. Both HTO (Drierite) samples are analyzed by liquid scintillation counting after the Drierite is dehydrated and the water vapor distilled under vacuum. Griffin has indicated[60] that a palladium catalyst, operating at lower temperature, would be much easier to use than his platinum catalyst. Levels of tritium (in stack gas) in the 0.2 to 2.0 pCi/cm^3 region were measured with accuracies of ±8.5%.

Ostlund[61] has developed another technique. His procedure also converts HT and other tritiated compounds into HTO (water vapor) by a catalytic combustion process; palladium metal carried on a molecular sieve is used to combust hydrogen in air to better than 98%. The resulting water is absorbed in the same catalyst. Sampling times as short as 10 minutes can be used to measure tritium levels in the 1 pCi/cm^3 region, with errors in the 3 to 5% region.

One difference between the two techniques is that Ostlund's is better adapted to single measurements, while Griffin's is designed for continuous, long-term sampling followed by batch analysis of the integrated activity. Also, because in Ostlund's technique the catalyst base molecular sieve is also the desiccant, there is not a problem with contamination and "memory" which might exist in the other technique. Either technique can perform independent measurements of HTO and HT in air, a significant advantage.

4. ENRICHMENT TECHNIQUES

Most measurements of tritium in environmental samples ordinarily do not require an enrichment step prior to counting. However,

techniques for tritium enrichment have been developed for those special cases in which tritium levels are extremely small. One example is in geological research, where studies have been made of underground natural waters whose ages are so great (many thousands of years) that tritium levels are minute ($\lesssim 10^{-3}$ pCi/cm^3). Here we will not attempt to do more than summarize some of the important work in the field of enrichment.

Among the procedures used to enrich tritium in water samples are electrolysis, thermal diffusion, and chromatography. Hoy[62] has developed a chromatographic system in which a palladium column is heated; tritium diffuses through the column faster than does normal hydrogen, and the first gas evolved is tritium-enriched. Tritium recovery of about 60% was obtained in the first 500 ml of gas evolved, and with a 30-minute counting period a T:H ratio of 10^{-17} could be measured with $\pm$ 41% (1σ) error. Perschke[63] was able to enrich tritium up to 40 times with 100% tritium recovery, using gas solid chromatography on metal sieves.

Another approach is electrolysis. When water is electrolysed, hydrogen is given off more readily than tritium; the relative loss rate can be as high as 35:1, varying with electrode material, surface conditions, electrolyte, and temperature. Hartley[64] has done a detailed analysis of the parameters involved in electrolytic procedures. Ostlund[65] has achieved enrichments in the 10^2 region by a series of successive electrolytic stages.

Thermal diffusion is another method used for tritium-hydrogen separation[66] but it is complicated and time consuming.

For further information on enrichment techniques, the interested reader is referred to the references cited.

5. SUMMARY

Three important numbers determine the sensitivity required of instruments for measuring tritium in environmental media. These are the "Maximum Permissible Concentrations" (MPC) for an individual in the general population.[9]

3000 pCi/cm^3 (as HTO in water)

40 pCi/cm^3 (as HT gas in air)

0.2 pCi/cm^3 (as HTO vapor in air).

The ideal instrument is one capable of measuring down to fractions of MPC levels in the appropriate medium. There are two main classes of measurements in each medium, that is laboratory and field measurements. The requirements are quite different in the two cases, since field instruments generally must be more rugged, require less maintenance, be less sensitive to temperature and humidity effects, and have some method of automatic readout (whether the measurements are continuous or batched). We shall summarize the situation in each of the various measurement areas separately:

a) Laboratory measurements of HTO in water. The liquid scintillation technique is the established method for this task. It is extremely sensitive (sensitivities below 1 pCi/cm^3 of water), has excellent reproducibility, suffers from few interferences (especially if distillation precedes counting), and is now commercially available in a variety of

of sophisticated, automatic systems. The disadvantages of liquid scintillation counting include both the high capital cost of equipment and high operating costs. Plastic scintillator systems are less expensive and have faster time response, but this is at the expense of perhaps two orders of magnitude in sensitivity. An important disadvantage of these plastic techniques is that the surface tends to degrade in time.

b) Urinalysis. This is now a well-developed technique, using liquid scintillation counting methods similar to those for HTO measurements in water. Automatic analysis equipment can reach sensitivities in the range of 10 pCi/cm^3 of urine. A proportional counter technique sensitive in the 1000 pCi/cm^3 range has also been developed for portable field use.

c) Field measurements of HTO in (flowing) water. A system for continuous measurements using a flow/mixing system and liquid scintillation counting has recently been developed. Refinements of this technique seem capable of ultimately providing reliable, sensitive instream monitoring capability for routine reactor effluent monitoring. Present sensitivities in the 25 pCi/cm^3 range seem adequate for effluent measurements, but can only be improved at present by using more scintillator at higher cost.

d) Continuous field measurements of total tritium in air. Flow-through ionization chambers and proportional counters have been a mainstay for tritium-in-air monitoring for nearly 25 years. Several commercially-available instruments now exist. The ion chamber suffers from various types of interferences, most notably from external gamma

fields; however, well-developed compensation systems now seem capable of measuring down to about 1 pCi/cm^3 in the presence of gamma fluxes in the few-mrad/hour range. Ion chambers also cannot distinguish tritium from other gaseous emitters (e.g., ^{41}Ar, ^{85}Kr), and are sensitive to cigarette smoke, ions, and aerosols unless suitably protected (this protection is now available in some commercial instruments). Gas proportional counters can partially discriminate against other radionuclides, and are less sensitive to aerosols. Their sensitivity (in the 1 pCi/cm^3 range) is comparable to that of the ion chambers. To detect levels much below about 1 pCi/cm^3 in air, it is necessary to remove tritiated water vapor from the air for liquid scintillation counting, or use combustion techniques.

e) HTO in air by removal and liquid scintillation counting. There are two well-developed methods for HTO (vapor in air) determinations at very low levels: the use of silica gel, and bubblers, for removal of vapor. In each case, liquid scintillation counting measures HTO in the resulting water. With silica gel, sensitivities well below 0.01 pCi/cm^3 of air are achievable; with bubblers the sensitivities are typically in the region of about 0.1 pCi/cm^3. These are both integrating techniques, capable of field sampling, but the analysis is by batch counting in the laboratory. Interferences are few, and precision is high.

f) HT in air (combustion). Combustion techniques followed by HTO counting can determine tritium as tritiated hydrogen gas (HT) at the level of a fraction of one pCi/cm^3 of air. If HTO vapor is removed by desiccation first, separate HT and HTO measurements can be made.

6. CONCLUSIONS

At present, measurements at levels well below MPC values for individuals in the general public are possible in each of the important measurement situations. In particular, laboratory liquid-scintillation analyses of batch water samples (HTO in water, HTO vapor extracted from air) are extremely sensitive and suffer few interferences. Unfortunately, these measurements are time-consuming and expensive. These same comments apply to the HTO-in-water system for in-stream effluent measurements.

In air samples, continuous measurements with ion chambers and proportional counters are only sensitive at about the 1 pCi/cm^3 level which is well above the MPC value of 0.2 pCi/cm^3 for general public exposure. More sensitive measurements in air require vapor removal and laboratory counting.

Clearly, advances are required to perform continuous, low-level monitoring of tritium in air. Also, cost-reduction in liquid (HTO) measurements is very desirable. Finally, the ruggedness, reliability, and maintainability of many present field instruments is of the highest priority.

7. ACKNOWLEDGMENT

The constant support and encouragement of D. A. Mack and R. M. Graven is gratefully acknowledged, as is the generous advice and review of S. Block, A. A. Moghissi, G. A. Morton, and R. V. Osborne.

This research was conducted in conjunction with a "Survey of Instrmentation for Environmental Monitoring"[67], which was funded under Grant No. AG-271 from Research Applied to National Needs, National Science Foundation, and performed at the University of California, Lawrence Berkeley Laboratory in facilities provided by the U. S. Atomic Energy Commission.

The mention of commercial products, their source or their use in connection with material reported herein is not to be construed as either an actual or implied endorsement of such products. The opinions expressed herein do not necessarily express the opinion of the National Science Foundation, the Atomic Energy Commission, or the University of California.

REFERENCES

1. Oak Ridge National Laboratory, Siting of fuel reprocessing and waste management facilities, Report ORNL-4451, Oak Ridge, TN 37830 (July 1971).
2. L. Bramati, pp. 28-38 in Séminaire Sur La Protection Contre les Dangers du Tritium, Service Central de Protection Contre les Rayonnements Ionisants, Le Vésinet, France, 16-18 April 1964 (CONF-640413).
3. H. L. Krieger, S. Gold, and B. Kahn, Tritium releases from nuclear power stations, Tritium Symposium (Ref. 18). Authors' address is EPA National Environmental Research Center, Cincinnati, OH 45268.
4. D. G. Jacobs, Sources of tritium and its behavior upon release to the environment, USAEC Critical Review Series, TID-24635, USAEC Division of Technical Information Extension, Oak Ridge, TN 37830 (1968).
5. J. Mantel, Int. J. Appl. Radiat. Isotopes 23, 407 (1972).
6. L. A. Currie, W. P. Libby, and R. L. Wolfgang, Phys. Rev. 101, 1557 (1956).
7. E. A. Martell, J. Geophys. Res. 68 (13), 3759 (1963).
8. W. D. Bond, Production of tritium by contained nuclear explosions in salt: I, Laboratory studies of isotopic exchange of tritium in the hydrogen-water systems, Report ORNL-3334, Oak Ridge National Laboratory, Oak Ridge, TN 37830 (1962).
9. International Commission on Radiological Protection, ICRP Publication 2, Permissible Dose for Internal Radiation. Pergamon

Press, New York (1959).

10. U. S. Atomic Energy Commission, 10CFR20 (Code of Federal Regulations, Title 10, Part 20), Standards for Protection Against Radiation, Appendix B, Table II, Concentrations in Air and Water Above Natural Background.

11. A. A. Moghissi, M. W. Carter, and E. W. Bretthauer, Health Phys. 23, 805 (1972).

12. K. F. Wylie, W. A. Bigler, and G. R. Grove, Health Phys. 9, 911 (1963).

13. H. L. Butler and J. H. LeRoy, Health Phys. 11, 283 (1965).

14. A. A. Moghissi, E. D. Toerber, J. E. Regnier, M. W. Carter, and C. D. Posey, Health Phys. 18, 255 (1970). Also, S. L. Kaufman et al., Investigation of tritiated luminous compounds, Report EERL 71-2, EPA Eastern Environmental Radiation Laboratory, Montgomery, AL 36101 (1971).

15. B. E. Lambert and J. Vennart, Health Phys. 22, 23 (1972).

16. L. E. Feinendegen, Tritium Labelled Molecules in Biology and Medicine. Academic Press, New York (1967).

17. International Atomic Energy Agency, Tritium in the Physical and Biological Sciences, Proceedings of an IAEA Symposium, in 2 vol., Vienna (1961).

18. Tritium, Proceedings of the Tritium Symposium, 30 August to 2 September 1971, Las Vegas, Nevada, to be published by the EPA National Environmental Research Center, Las Vegas, NV 89114.

19. B. J. Hannahs and C. J. Kershner, Report MLM-1946, Mound Laboratory, Monsanto Research Corp., Miamisburg, OH 45342 (1972).

20. A. E. Rudolph, T. E. Carroll, and R. S. Davidson, Report BMI-171-203, Battelle Memorial Institute, Columbus, OH 43201 (1971).

21. D. K. Horrocks and C. T. Peng, editors, Organic Scintillators and Liquid Scintillation Couting. Academic Press, New York (1971).

22. E. D. Bransome, editor, The Current Status of Liquid Scintillation Counting. Grune & Stratton, New York (1970).

23. D. L. Horrocks, Measuring tritium with liquid scintillators, presented at Tritium Symposium, Ref. 18.

24. A. A. Moghissi, H. L. Kelley, J. E. Regnier, and M. W. Carter, Int. J. Appl. Radiat. Isotopes 20, 145 (1969).

25. R. Lieberman and A. A. Moghissi, Int. J. Appl. Radiat. Isotopes 21, 319 (1970).

26. A. A. Moghissi, p. 419 in Advances in Chemistry Series, No. 93, "Radionuclides in the Environment," American Chemical Society (1970).

27. S. B. Garfinkel, W. B. Mann, R. W. Medlock, and O. Yura, Int. J. Appl. Radiat. Isotopes 16, 27 (1965).

28. A. A. Moghissi and M. W. Carter, Anal. Chem. 40, 812 (1968).

29. Standard Methods for the Examination of Water and Wastewater, 13th edition, American Public Health Association, Washington, DC 20036 (1971).

30. Annual Book of ASTM Standards, Part 23 (1971), American Society for Testing and Materials, Philadelphia, PA 19103. The tritium methods are designated D2476-70.

31. P. Ting and R. Litle, Continuous Monitoring of aqueous tritium activity, Beckman Instruments, Inc., Fullerton, CA 92634, presented at Tritium Symposium, 1971 (Ref. 18).

32. P. Ting and M. K. Sullivan, Reactor coolant monitoring with a discrete sampling flow cell-liquid scintillation system, Report No. 558 (1971), Beckman Instruments, Inc., Fullerton, CA 92634.

33. G. Cowper, Report AECL-3864, Atomic Energy of Canada Limited, Chalk River, Ontario, Canada (1971).

34. W. J. Brady and V. M. Mulligan, Tritium exposure experience at the Nevada Test Site, presented at the Symposium on Instrumentation, Experience, and Problems in Health Physics Tritium Control, Sandia Corporation, Albuquerque, NM 87115, February 1967.

35. A. A. Moghissi, R. Lieberman, M. W. Carter, and J. E. Regnier, Health Phys. 17, 727 (1969).

36. R. V. Osborne, Report AECL-2702 (1968), Atomic Energy of Canada Limited, Chalk River, Ontario, Canada. Also, Health Phys. 18, 87 (1970).

37. S. Block, D. Hodgekins, and O. Barlow, Recent techniques in tritium monitoring by proportional counters, Report UCRL-51131, Lawrence Radiation Laboratory, Livermore, CA 94550 (1971).

38. R. P. Baker and R. D. Richards, Reliable and versatile instrumentation for detection of tritium hazard designed for military applications, unpublished report, Sandia Laboratories, Albuquerque, NM 87115. Also, Sandia Report SC-M-68-245, A new family of tritium mounting equipment, Sandia Laboratories, Albuquerque, NM 87115 (1968).

39. A. A. Moghissi, H. L. Kelley, C. R. Phillips, and J. E. Regnier, Nucl. Instr. Methods 68, 159 (1969).

40. R. V. Osborne, Nucl. Instr. Methods 77, 170 (1970).

41. W. R. Kanne, Monitoring of gas for radioactivity, U. S. Patent 2,599,922, June 10, 1952, filed October 12, 1944.

42. J. E. Hoy, Health Phys. 6, 203 (1961).

43. E. C. Morris, p. 491 in Assessment of Airborne Radioactivity, International Atomic Energy Agency, Vienna (1967).

44. W. L. Marter and C. M. Patterson, American Nucl. Society Transactions 14, 162 (1971).

45. R. V. Osborne, Monitoring reactor effluents for tritium: problems and possibilities, Report AECL-4054, Atomic Energy of Canada Limited, Chalk River, Ontario, Canada (1971), presented at Tritium Symposium (Ref. 18).

46. J. D. Anthony, Nucleonics 17, No. 4, 110 (1959).

47. R. V. Osborne and G. Cowper, The detection of tritium in air with ionization chambers, Report AECL-2604, Atomic Energy of Canada Limited, Chalk River, Ontario, Canada (1966).

48. H. L. Kelley and C. R. Phillips, A review of tritium monitoring devices, (1971) presented at Tritium Symposium (Ref. 18).

49. R. V. Osborne, Chalk River Nuclear Laboratories (private communication).

50. J. R. Waters, Pitfalls and common errors in the measurement of tritium in air, Report JLI-506, Johnston Laboratories, Inc., Cockeysville, MD 21030, presented at Health Physics Society Annual Meeting, Chicago, 2 July 1970.

51. D. O. Nellis et al., p. 35 of Tritium contamination in particle accelerator operation, USDHEW, Public Health Service Publication

999-RH-29, Washington, DC (1967).

52. Bendix Corp., Kansas City, MO 64141, Attn.: V. H. Clabaugh or J. W. Fraser.

53. G. E. Driver, Rev. Sci. Instr. 27, 300 (1956).

54. R. Ehret, Proportional flow counters for measurement of tritium in air, p. 531 of Assessment of Airborne Radioactivity. International Atomic Energy Agency, Vienna (1967).

55. Intersociety Committee for a Manual of Methods for Ambient Air Sampling and Analysis, Methods of Air Sampling and Analysis. American Public Health Association, Washington, DC 20036 (1972).

56. J. H. Osloond, J. B. Echo, W. L. Polzer, and B. D. Johnson, A tritium air sampling method for environmental and nuclear plant monitoring, (1971), presented at Tritium Symposium (Ref. 18).

57. A. M. Valentine, Report LA-3916, Los Alamos Scientific Laboratory, Los Alamos, NM 87544 (1968).

58. W. R. Griffin, J. A. Cochran, and A. A. Bertuccio, A sampler for non-aqueous tritium gases, EPA Northeastern Radiological Health Laboratory, Winchester, MA 01890 (1972), unpublished.

59. W. A. Hammond Drierite Company, Xenia, OH.

60. W. R. Griffin (private communication).

61. H. G. Ostlund, A rapid field sampling for tritium in atmospheric hydrogen, Report ML 70075, Rosenstiel School of Marine and Atmospheric Sciences, Univ. of Miami, Miami, FL 33149 (1970). Also, H. G. Ostlund, M. O. Rinkel, and C. Rooth, J. Geophys. Research 74, 4535 (1969).

62. J. E. Hoy, Science 161, 464 (1968). Also, D. W. Hayes and H. E. Hoy, A chromatographic system for the enrichment and analysis of low-level tritium samples (1971), presented at Tritium Symposium (Ref. 18).

63. H. Perschke, M. Crespi, and G. B. Cook, Int. J. Appl. Radiat. Isotopes 20, 813 (1969).

64. P. E. Hartley, Nucl. Instr. Methods 100, 229 (1972).

65. H. G. Ostlund and E. Werner, The electrolytic enrichment of tritium and deuterium for natural tritium measurements, p. 95, Vol. I of Ref. 17.

66. B. Verhagen, p. 657 in Radioactive Dating and Methods of Low-Level Counting. International Atomic Energy Agency, Vienna (1967).

67. Environmental Instrumentation Group, Lawrence Berkeley Laboratory, Survey of Instrumentation for Environmental Monitoring, Report LBL-1 (1973).

TABLE I

Estimated tritium (^3H) production at nuclear power stations, Ci/yr.[3]

(Power level approximately 1000 MWe and 3300 MWt)

		Boiling water reactor	Pressurized water reactor
coolant water	$^2H(n, \gamma)^3H$	8	3
dissolved boron	$^{10}B(n, 2\alpha)^3H$	0	600
uranium fuel rods	fission	13,000	13,000
boron control rods	$^{10}B(n, 2\alpha)^3H$ and $^{10}B(n, \alpha)^7Li$ $^7Li(n, n\alpha)^3H$	5.000	0

FIGURE CAPTIONS

FIGURE 1. Estimated production of tritium (^3H) from the nuclear power industry of the free world (from Ref. 1).

FIGURE 2. Beta energy spectrum for tritium (from Ref. 5).

FIGURE 3. Response of the flowmeter described in Ref. 31. Analog recording of ratemeter output for five injected tritium water samples.

FIGURE 4. Schematic diagram of the scintillation detector (from Ref. 39).

FIGURE 5. Detector for tritium in water. The scintillator sheets fit into a cubic lucite cell. The lucite plate shown here, on which the sheets are mounted, forms one vertical side of the cell (from Ref. 40).

FIGURE 6. Sampling train for total airborne tritium (from Ref. 58).

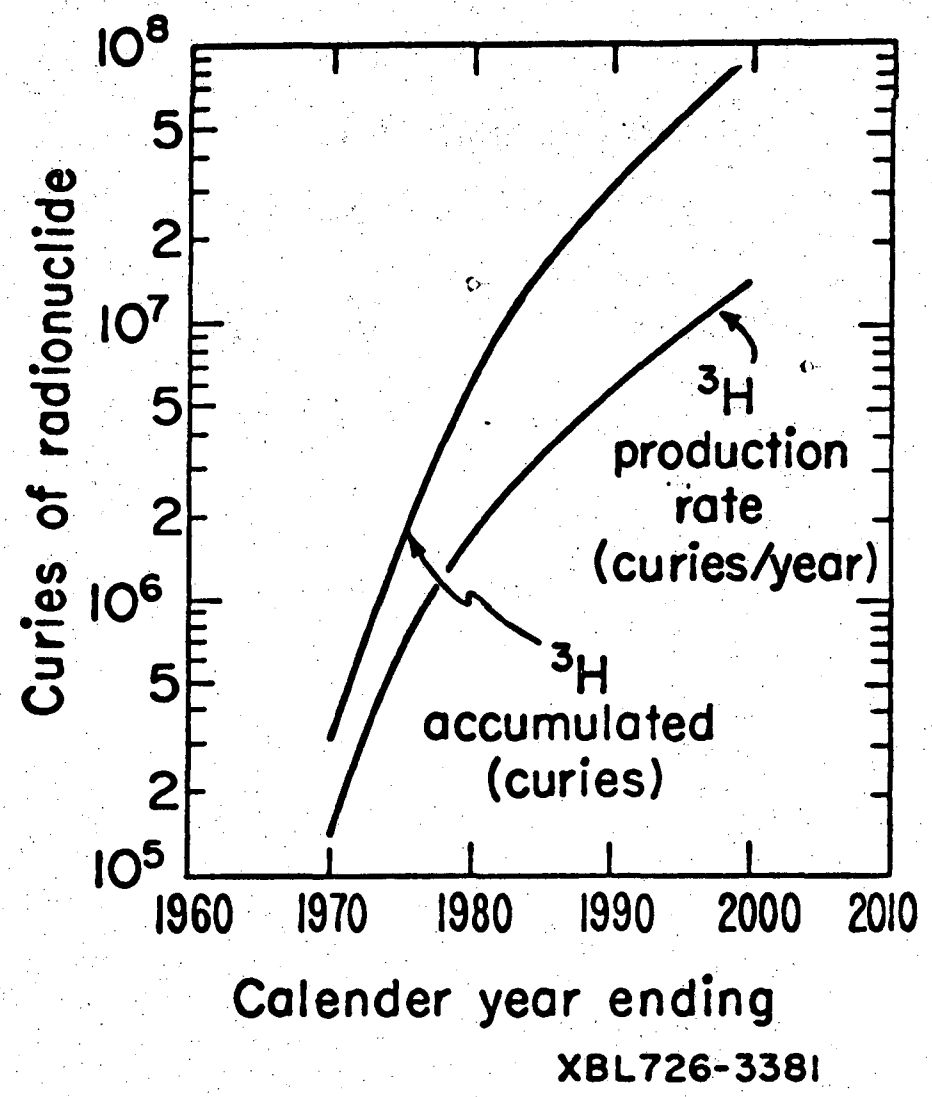
Curies of radionuclide
10^8
5
2
10^7
5
2
10^6
5
2
10^5
1960
1970
1980
1990
2000
2010
Calender year ending
^3H production rate (curies/year)
^3H accumulated (curies)
XBL726-3381

Fig. 1

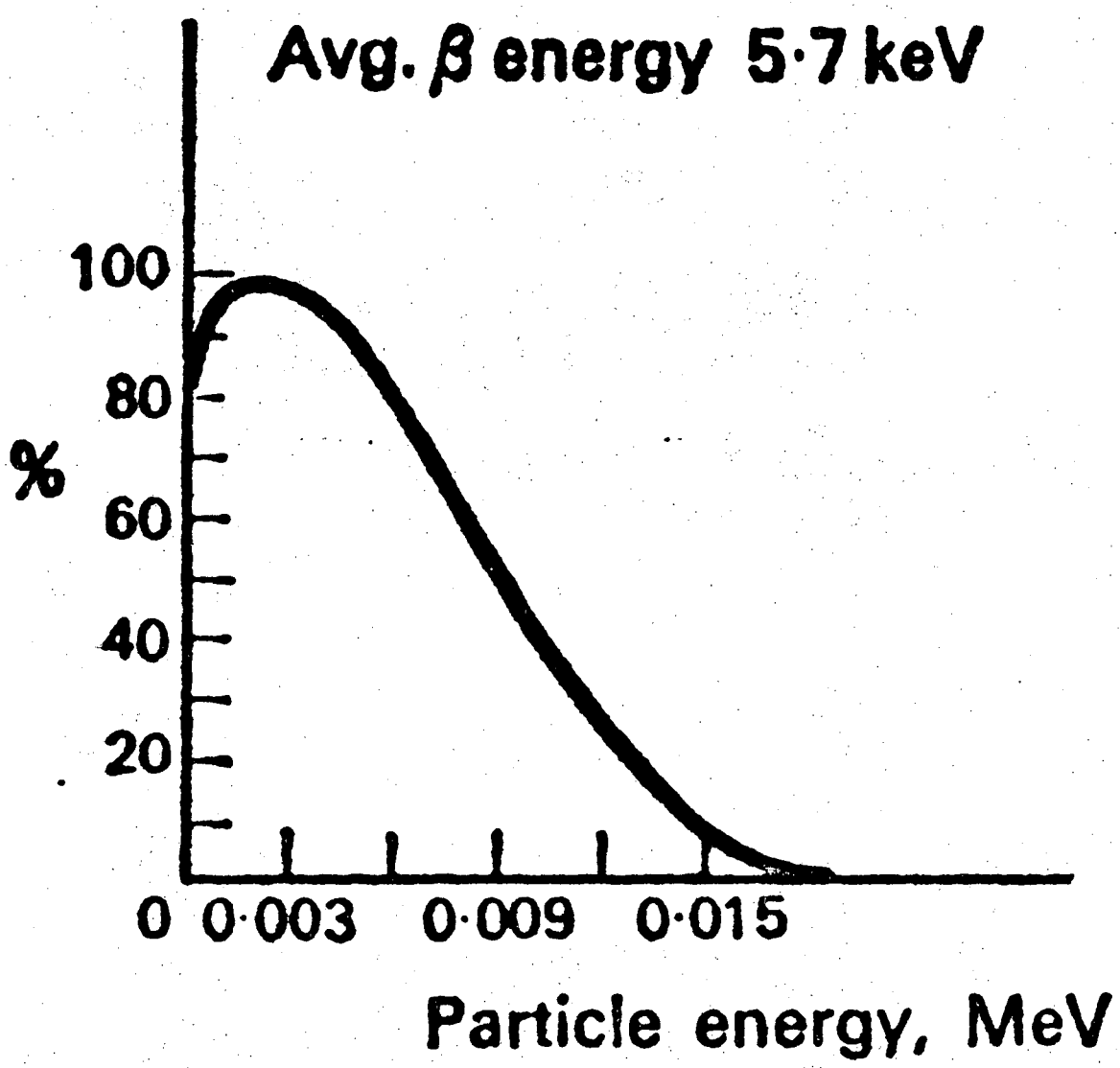
Avg. β energy 5·7 keV
100
80
%
60
40
20
0
0·003
0·009
0·015
Particle energy, MeV

Fig. 2

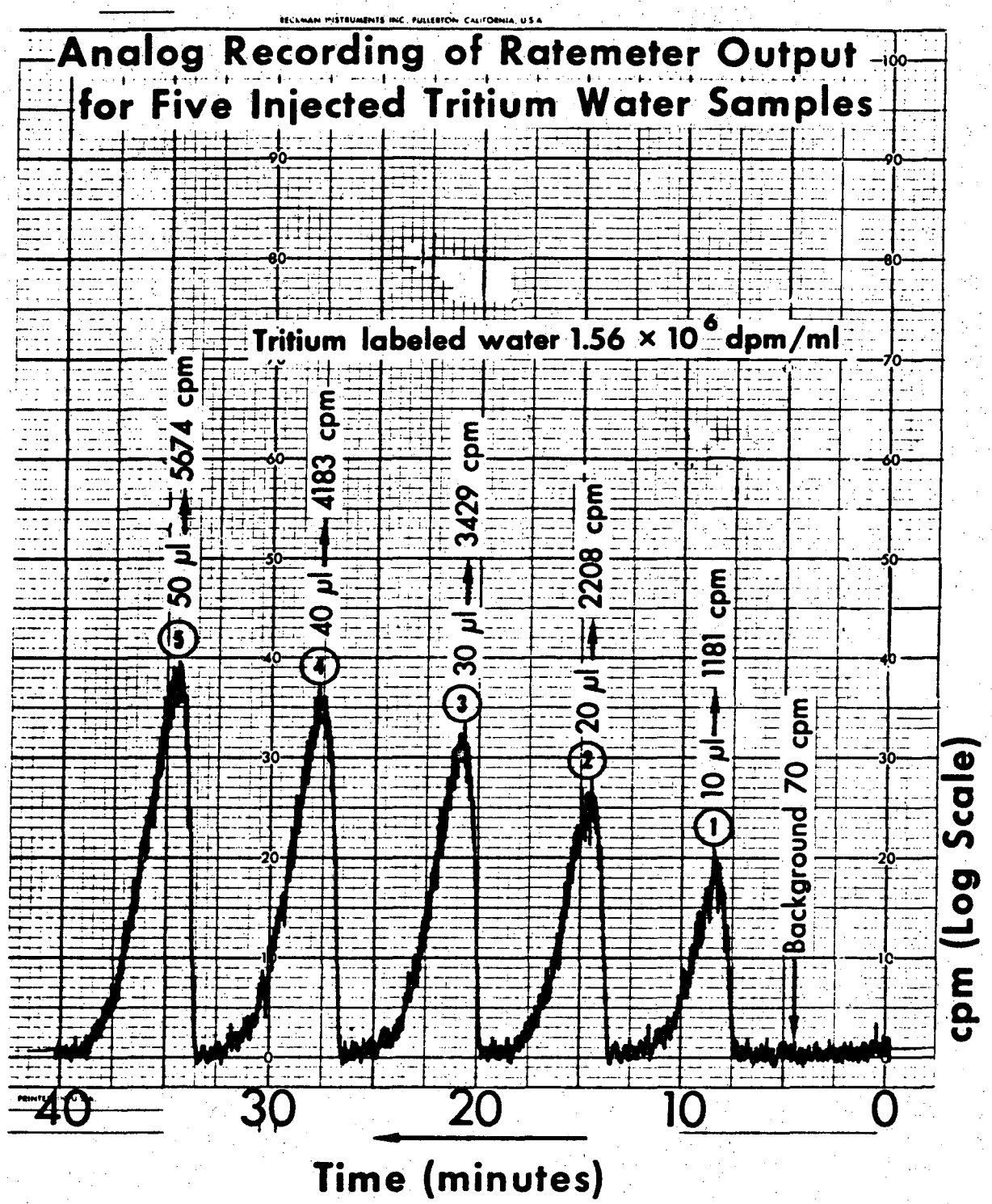
BECKMAN INSTRUMENTS INC. FULLERTON CALIFORNIA, U.S.A.
Analog Recording of Ratemeter Output
for Five Injected Tritium Water Samples
Tritium labeled water 1.56 × 10^6 dpm/ml
50 µl 5674 cpm
40 µl 4183 cpm
30 µl 3429 cpm
20 µl 2208 cpm
10 µl 1181 cpm
Background 70 cpm
cpm (Log Scale)
40
30
20
10
0
Time (minutes)

Fig. 3

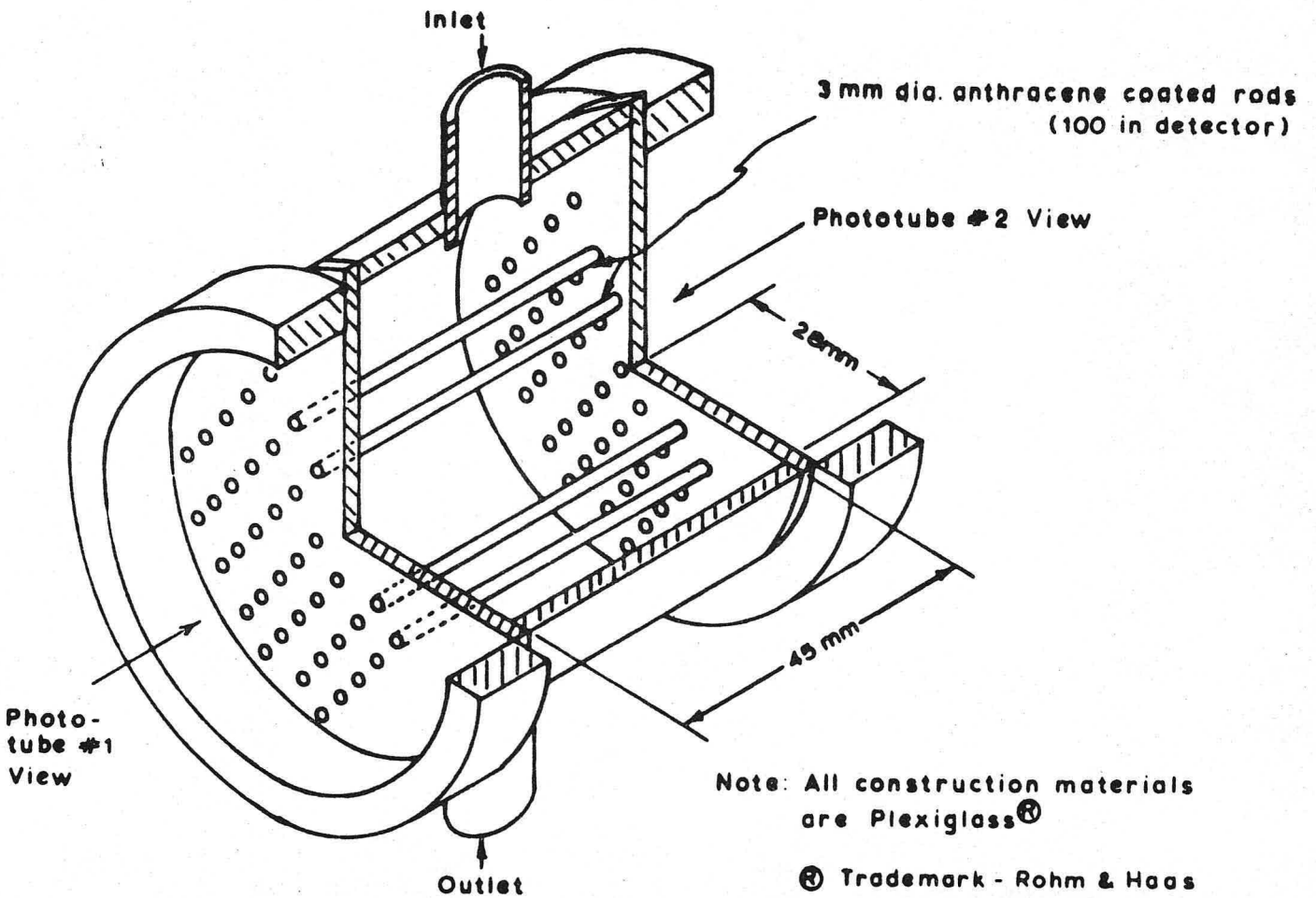
Inlet
3 mm dia. anthracene coated rods
(100 in detector)
Phototube #2 View
28mm
45 mm
Photo-
tube #1
View
Outlet
Note: All construction materials
are Plexiglass®
® Trademark - Rohm & Haas

Fig. 4

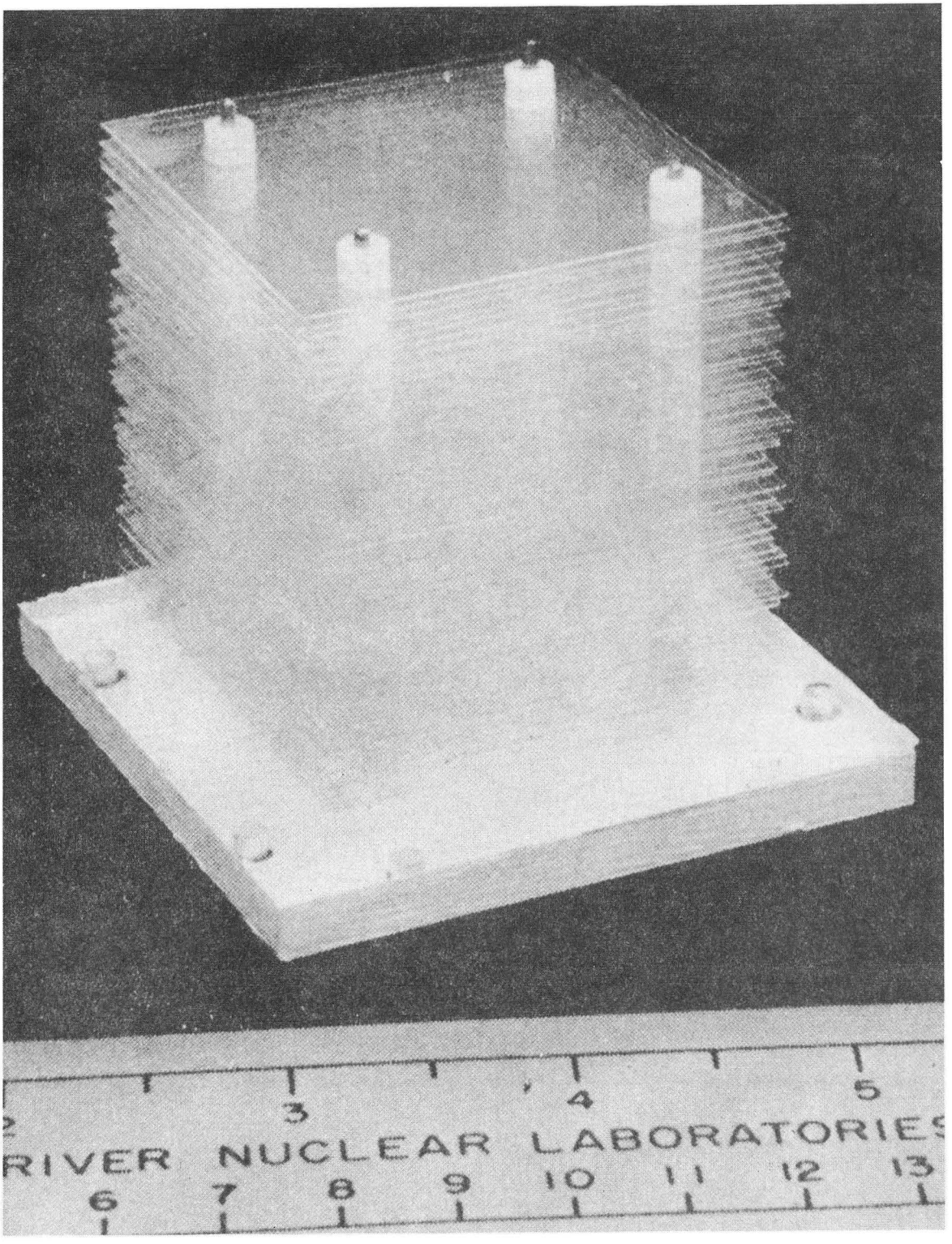

XBB 738-4921

Fig. 5

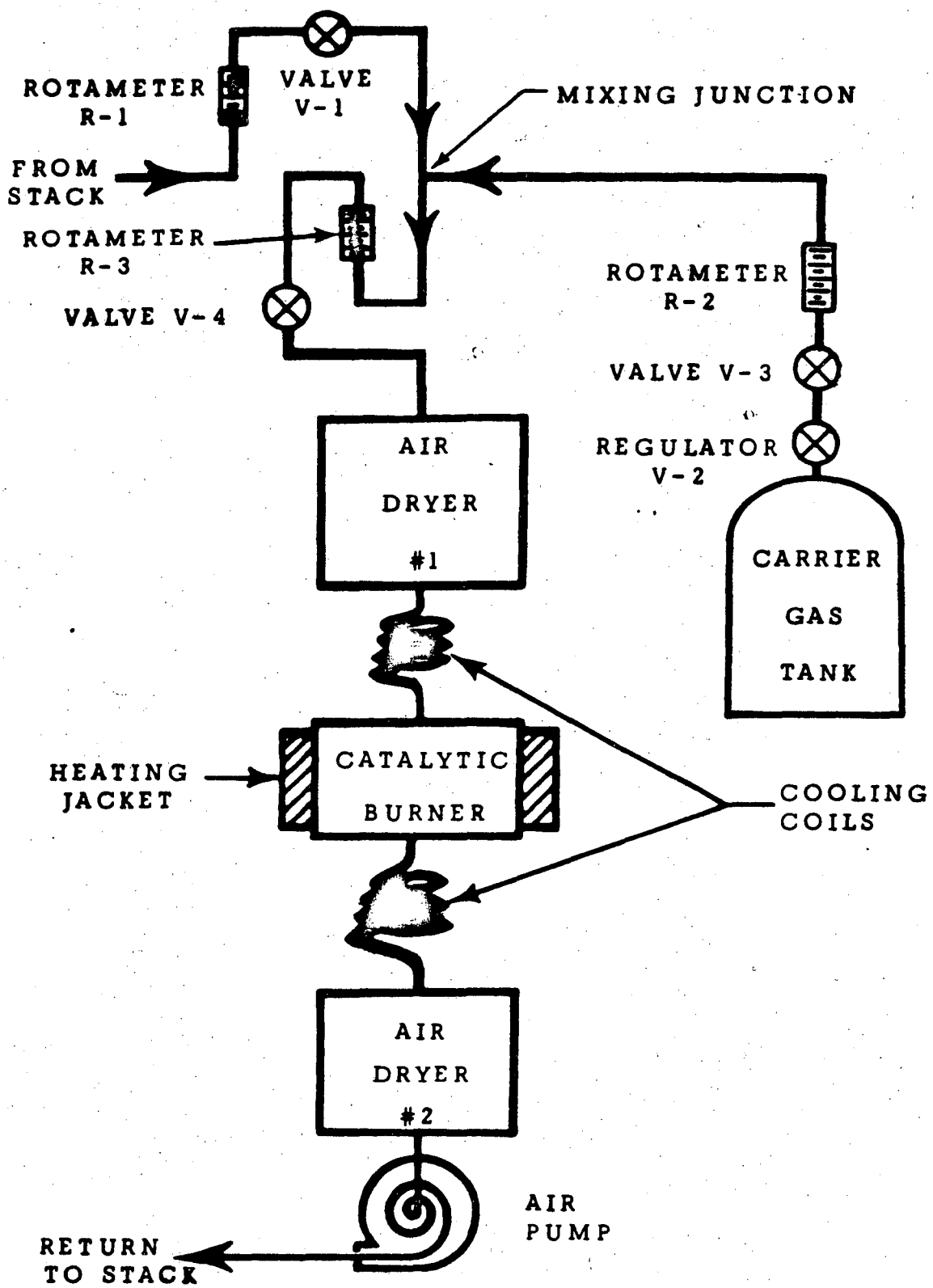
ROTAMETER
R-1
VALVE
V-1
MIXING JUNCTION
FROM
STACK
ROTAMETER
R-3
VALVE V-4
ROTAMETER
R-2
VALVE V-3
REGULATOR
V-2
AIR
DRYER
#1
CARRIER
GAS
TANK
HEATING
JACKET
CATALYTIC
BURNER
COOLING
COILS
AIR
DRYER
#2
AIR
PUMP
RETURN
TO STACK

Fig. 6

LEGAL NOTICE

This report was prepared as an account of work sponsored by the United States Government. Neither the United States nor the United States Atomic Energy Commission, nor any of their employees, nor any of their contractors, subcontractors, or their employees, makes any warranty, express or implied, or assumes any legal liability or responsibility for the accuracy, completeness or usefulness of any information, apparatus, product or process disclosed, or represents that its use would not infringe privately owned rights.

TECHNICAL INFORMATION DIVISION
LAWRENCE BERKELEY LABORATORY
UNIVERSITY OF CALIFORNIA
BERKELEY, CALIFORNIA 94720