Submitted to Health Physics

LBL-1581
Preprint c.1

RADON-222 AND ITS DAUGHTERS -- A REVIEW OF INSTRUMENTATION FOR OCCUPATIONAL AND ENVIRONMENTAL MONITORING

Robert J. Budnitz

February 1973

Prepared for the U. S. Atomic Energy Commission
under Contract W-7405-ENG-48

For Reference

Not to be taken from this room

LAWRENCE BERKELEY LABORATORY
UNIVERSITY OF CALIFORNIA
BERKELEY

LBL-1581
c.1

DISCLAIMER

This document was prepared as an account of work sponsored by the United States Government. While this document is believed to contain correct information, neither the United States Government nor any agency thereof, nor the Regents of the University of California, nor any of their employees, makes any warranty, express or implied, or assumes any legal responsibility for the accuracy, completeness, or usefulness of any information, apparatus, product, or process disclosed, or represents that its use would not infringe privately owned rights. Reference herein to any specific commercial product, process, or service by its trade name, trademark, manufacturer, or otherwise, does not necessarily constitute or imply its endorsement, recommendation, or favoring by the United States Government or any agency thereof, or the Regents of the University of California. The views and opinions of authors expressed herein do not necessarily state or reflect those of the United States Government or any agency thereof or the Regents of the University of California.

LBL-1581

RADON-222 AND ITS DAUGHTERS -- A REVIEW OF INSTRUMENTATION FOR OCCUPATIONAL AND ENVIRONMENTAL MONITORING

Robert J. Budnitz

Lawrence Berkeley Laboratory
University of California
Berkeley, California 94720

ABSTRACT

The aim of this review is to provide an overview of the techniques which have been developed for measuring radon-222 and its daughters in various media. The main emphasis is on measurements for surveillance and protection in occupational and environmental situations. Measurements in specialized research applications are not treated in detail. Overviews are first provided of the physical characteristics of radon-222 and its daughters; of the sources of and typical levels of concentrations in the natural environment and in occupational exposures; and of the radiation guides. The various measurement techniques are then discussed.

1. INTRODUCTION

In the uranium mining industry, radiological exposures to radon-222 daughters are the most significant hazard. Radon gas also appears in the natural radiation environment wherever natural uranium exists in surface rocks and ores. Radon-222 and its daughters present a unique problem and hence much instrumentation developed for their measurement is unique.

We shall begin by outlining the physical characteristics of the radon decay chain, and follow with discussions of the radiation protection guides and the special unit (Working Level) developed for measuring these activities. Finally, we will discuss the types of measurement capabilities required of instrumentation, and the instrumentation itself. We shall deal both with measurements in the natural environment, and also with measurements for occupational radiation exposure monitoring and control, mainly in uranium mines.

2. PHYSICAL CONSIDERATIONS

a. Radon-222 and Its Decay Chain

The decay chain of which radon-222 is a part is one of the oldest and best-studied phenomena in nuclear physics. It begins with the naturally occurring isotope uranium-238 and ends with the stable lead-206. In between there are 8 alpha decays and 6 beta decays.

More detailed data are given in Table 1.[1] Note that many of the chain members are still often referred to by their historical names, and we shall often use this nomenclature here also.

Radon-222 provides a natural division for our purposes, because

we are interested mainly here in radon and its daughters. However, there is also an important physical basis for the separation: that is, radon is an inert gas. As ^{238}U decays through five steps to ^{226}Ra, the heavy nucleus remains fixed in place (in rock, for example). However, there is diffusion of radon gas from the local site of production, and in any particular (surface) rock some of the radon will escape into the surrounding atmosphere. This is the source of the historical name for ^{222}Rn, "Emanation Radon."

Thus for many practical purposes one can think of uranium-laden ore as a "source" of radon gas, as well as a "source" of the many α, β, and γ radiations being emitted by the constituent nuclei themselves.

The properties of the chain radium → radon-daughters concern us here. Note that radium-226 has a half-life of 1602 years. Since that is much longer than the half-life of any subsequent daughter, ^{226}Ra can be viewed (for short times) essentially as a fixed-rate generator for ^{222}Rn (whose half-life is 3.82 days). The equilibrium build-up of the succeeding daughters (RaA, RaB, RaC) is shown in Figure 1.[2] Note that after RaC decays, RaC′ follows nearly immediately (164 μsec) and that RaD (^{210}Pb) has a 22-year half-life, which for short times effectively blocks the decay chain. Hence we shall deal here almost exclusively with the first four daughters, RaA, RaB, RaC, and RaC′.

Evans[2] has given a very useful summary of the physical and engineering considerations concerning the radon daughters. The chemical properties of the daughters are crucial. Although radon in inert, the three elements immediately below it in the periodic table (polonium, bismuth, and lead) are all chemically active. In particular, when radon

(gas) decays, most of the newly created ^{218}Po (RaA) atoms, typically ionized, tend to attach almost immediately to any particular matter in the atmosphere. Most RaB, RaC, and RaC′ atoms are so attached at birth. In dust-laden mine air, the consequence is that the particulate matter becomes radioactive by adsorption. Whether or not they are attached to particulate matter, the daughters cause important radiological consequences when inhaled, since they tend to lodge in the lung mucosa.

The alpha-emitting daughters are RaA and RaC′. The alpha decay energies are as follows:

^{222}Rn	→	^{218}Po(RaA)	5.48 MeV
^{218}Po(RaA)	→	^{214}Pb(RaB)	6.00 MeV
^{214}Po(RaC′)	→	^{210}Pb(RaD)	7.69 MeV

The energy differences can, of course, provide a basis for distinguishing the individual components by alpha spectroscopy.

The two important beta/gamma-emitting daughters are RaB and RaC. Each has a rather complicated set of emissions, with three important betas and several gamma lines each (see Table 1). Because of this, beta detection as a means of measurement is complicated: the spectral efficiency of any beta detector is very hard to determine. The RaB and RaC gamma lines could be detected by gamma-spectroscopic methods but this is not now commonly done.

b. Radon-220 (Thoron) and Radon-219 (Actinon)

In situations where radon-222 must be measured, two other isotopes of radon are potential interferences. The most important is

radon-220 (historically known as 'thoron'), a member of the decay chain which originates with naturally-occurring thorium-232. The other isotope is radon-219 (historically, 'actinon'), from the chain originating with uranium-235. Both of these gases behave as does radon-222: they emanate from the radioactive ores after their birth by the alpha decays of their immediate parents ($^{224}Ra \rightarrow {}^{220}Rn$, $^{223}Ra \rightarrow {}^{219}Rn$).

In the uranium mines, thorium content of the ores is low (typically $\lesssim 1\%$ of that of ^{238}U), and the $^{235}U/^{238}U$ ratio is uniform at about 0.72%. Thus the equilibrium production of both thoron and actinon gases is relatively small. Equally important, the half-lives are quite short (55 sec for thoron, 4.0 sec for actinon). Because of their limited abundance and short half-lives, their direct radiological impacts are in both cases much less significant than that of radon-222.

Some of thoron's daughters can produce possible backgrounds when radon-222 daughters are collected on air filters for measurement: ^{212}Pb and ^{212}Bi have half-lives of 10.6 and 1.01 hours, respectively. Because of actinon's short half-life, its ability to diffuse out of earth and rock is so limited that it is seldom, if ever, present at levels requiring measurement in the environment.

Throughout this section, the term 'radon' will be used to denote 'radon-222' unless specifically stated otherwise.

3. RADIATION PROTECTION GUIDES

For the purposes of radiological protection of the lungs in the uranium mining industry, a specialized unit of exposure to radon-222 has been developed. This is the Working Level (WL), defined as "any

combination of radon daughters in one liter of air that will result in the ultimate emission of 1.3×10^5 MeV of potential alpha energy."[3] This value is derived from alpha energies released by the total decay of the short-lived daughters (RaA, RaB, RaC, RaC′) at radioactive equilibrium with 100 pCi of ^{222}Rn/liter of air. Note that the WL considers only the alphas from radon-222 daughters and not from radon gas itself.

The reason for the specialized unit is mainly operational: the WL is a concept having validity in any mixed concentration of radon and its daughters, whether or not they are in equilibrium. Just as important, it lends itself to practical measurements in the mines.

An extension of the WL concept is the "Working Level Month" (WLM), which expresses a cumulative exposure. It is defined as follows: "Inhalation of air containing a radon daughter concentration of one WL for 170 working hours results in an exposure of one WLM."[3]

The Secretary of Labor, acting under provisions of the Walsh Healy Act, promulgated the following standard in late 1968:[4]

> "Occupational exposure to radon daughters in mines shall be controlled so that no individual will receive any exposure of more that 2 WLM in any consecutive 3-month period and no more than 4 WLM in any consecutive 12-month period. Actual exposures shall be kept as far below these values as practicable."

In early 1969, the Department of the Interior issued the following standard calling for action on the basis of individual concentrations:[5]

> "If samples show an atmospheric concentration of radon daughters of more than 1 WL but less than 2 WL, immediate corrective action shall be taken or the men shall be withdrawn. When concentrations higher than 2 WL are indicated, the men shall be withdrawn from the area until corrective action is taken and the radon-daughter atmospheric concentrations are reduced to 1 WL or less.... Smoking shall be prohibited where uranium is mined."

The above two standards are now considered the operational guidelines for exposure of miners to radon daughters.

It should be emphasized that the WL standards are based on epidemiological evidence, rather than on calculated dose equivalent to the lungs.[6]

Exposure to radiation other than the inhalation of radon daughters must be considered separately. The usual occupational limits apply: that is, 5 rem/year for whole body external exposure, and so on. These limits are not discussed in detail here.

A limit for radon-222 gas itself is not considered separately by the Federal Radiation Council, because of the general recognition that the impact of the radon daughters is the more important consideration.

The International Commission on Radiological Protection explicitly considers the impact of RaA in its recommendation. We quote from ICRP Report No. 6:[7]

"Recent studies have indicated that when radon and its daughters are present in ordinary air the free ions of RaA constitute only about 10 per cent of the total number of RaA atoms that would be present at equilibrium and these unattached atoms deliver all but a small fraction of the dose to the bronchi. Based on these measured dose rates the $(MPC)_a$ for exposure to radon and daughter products is found to be

$$(MPC)_a = \frac{3000}{(1 + 1000\underline{f})} \text{ pCi } ^{222}\text{Rn/liter of air}$$

where $\underline{f}$ is the fraction of the equilibrium amount of RaA ions which are unattaced to nuclei."

If we set $\underline{f}$ = 10%, as the ICRP indicates might be typical, then the occupational $(MPC)_a$ would be 30 pCi/liter.

There is no explicit guideline for exposure of the general public to radon and its daughters. However, both the ICRP[8] and the NCRP[9] have recommended in their general overviews that individuals in the general public be limited to exposures at levels one-tenth as high as those for occupational exposure. Also, for a suitably large sample of the general population, the general guideline is another factor of 3 smaller still.

4. SOURCES OF RADON AND ITS DAUGHTERS

From the standpoint of radiological impact, the most important potential problem from radon and its daughters is occupational exposure in the uranium mining industry. This will not be discussed in detail.

Here we shall summarize by noting that in the U.S. several thousand miners now require routine radiological monitoring.

Another source of radon is mill tailings. In some of the Rocky Mountain states, this has been a public health problem in recent years.[10,11] A 1969 study indicated that background radon-222 concentrations in four study sites in Colorado and Utah were in the range of 0.4 to 0.8 pCi/liter. Directly over tailings, levels higher by a factor of about 10 were reported, with typical spatial distributions such that the area beyond about one-half-mile radius was not directly affected.

In late 1972, the AEC published proposed 'remedial action criteria'[12] for the area around Grand Junction, Colorado. These are aimed at eliminating some of the more important sources of exposure to the general public from tailings. Remedial action would consist of removal of tailings, ventilation, shielding, or use of sealants; such action is "suggested" when a radon daughter concentration exceeding 0.01 WL (or a level of 0.05 mR/hour external gamma radiation) is measured, and is "indicated" when 0.05 WL (or 0.10 mR/hour) is exceeded.

Radon occurs naturally in air wherever uranium-laden soils or rocks occur. Rates of emanation and radon concentrations have been measured by Pearson.[13] Near Chicago, radon was present one meter above the ground at levels which varied diurnally from about 0.1 to 1.4 pCi/liter. Emanation rates in regions where ^{238}U mining is commercially feasible were found to be larger by as much as two orders of magnitude than rates near Chicago.[13] However, there is not necessarily a direct correlation between emanation rates and radon concentrations near the ground.

5. MEASUREMENT TECHNIQUES

There are four distinct classes of measurement which we shall discuss here:

i) Measurements of radon (gas) concentrations

ii) Measurements of Working Level

iii) Measurements of individual radon daughter concentrations.

iv) Working Level dosimetry

Some of the discussion here relies on a 1972 summary of radon instrumentation written by A. J. Breslin of the U. S. A. E. C. Health and Safety Laboratory.[14] Another useful reference concerned with instrumentation is the 1963 IAEA Symposium.[15]

a. Measurements of Radon (Gas)

Here we shall discuss methods for measuring radon gas activity as distinct from the activity of its daughters. This type of measurement is made by some of the more sophisticated ventilation engineers in studying mine-air quality; by those concerned with natural levels of radon gas in the air; to measure radium-226 from the emanation of its daughter radon-222; and when radon-222 is used as a tracer in atmospheric studies. Methods for measuring individual daughters will be discussed in a later sub-section.

There are two quite different approaches to the specific measurement of radon-222. In the first, equilibrium can be assumed to have become established between radon and its daughters; in the second, the daughters are removed from the sample gas, after which either the decay of radon itself is detected or the daughters are allowed to ingrow again for counting.

Measurements of radon activity can be made with rather simple instruments, for routine monitoring measurements, or with quite

complex instruments, usually used in research applications. We shall begin by discussing the two simplest techniques.

The most common simple instrument for measuring radon gas is the Lucas chamber.[16] The chamber itself is a small metal or glass cell with a flat glass bottom. Its shape is usually spherical but can be cylindrical or conical as well. The inside is lined with zinc-sulfide scintillator, and the scintillations are viewed and counted through the flat window by a photomultiplier tube. Filtered air samples can be drawn into the chamber using a pump, or alternatively by evacuating the chamber and then admitting a filtered sample through a valve. Typical chamber volumes are in the 100-200 ml range, and are thus small enough to be easily portable. Figure 2 shows the original chamber of Lucas.

The filter removes the radon daughters so that only the parent radon gas is admitted to the chamber. The radon gas subsequently decays and reaches equilibrium with its daughters. A difficulty in the original design was optimizing and stabilizing the detection efficiency for the daughters, which are usually electrically charged. When a conducting layer on the inside of the window is used, the charged daughters turn out to distribute themselves uniformly on the window and the ZnS(Ag) walls, unless the electrostatic conditions are changed by switching PM tubes. (According to a recent study[17], this conducting layer is unnecessary if the photomultiplier is operated with a grounded photocathode.) The alpha radiation detected by the ZnS(Ag) phosphor is a measure of the activity of ^{222}Rn, RaA, and RaC′. Interferences from thoron gas (^{220}Rn) or even actinon gas (^{219}Rn) are possible, since they are both

also α-emitters; these are small because of the short half-lives (55 sec for thoron and 4 sec for actinon). There are no other significant interferences. The sensitivity of the method as usually used in the mines is about 10 pCi/liter,[14] although sensitivities an order of magnitude better are achievable with much longer counting times.

A detailed description of a technique for constructing Lucas chambers has been given in the Handbook of the EPA's Las Vegas National Environmental Research Center.[18] Also, detailed calibration procedures for Lucas chambers have been described in the APHA Standard Methods,[19] under the section on determining radium-226 in water by a radon-222 emanation technique.

An alternative to the Lucas chamber is the two-filter method.[20] A metal cylinder with a filter on each end is the basic sampling unit. Sample air is pumped through the cylinder (typically for 5 minutes at about 10 liters/minute). The upstream filter removes all particles, most importantly all radon daughters. Radon gas passes through, and inside the cylinder a small fraction decays to ^{218}Po(RaA). Some of the RaA is deposited on the downstream filter, which is immediately counted for alpha activity (RaA's half-life being only about 3 minutes). Counting can be done with any of a number of instruments: Thomas and LeClare[20] used a ZnS(Ag)/photomultiplier system. The radon concentration must be calculated using an algebraic expression developed by Thomas and LeClare, which depends upon geometrical sizes, sampling rate, and counting time. Using a 120-cm long, 8.3-cm diameter tube, this technique is sensitive at the level of a few pCi/liter; calculations indicate that sensitivities as low as 0.1 pCi/liter could be achieved with a larger

chamber, higher flow rate, and other small changes.[20] A variation of the method has been used for measurements of environmental radon concentrations < 0.1 pCi/liter, and sensitivities as low as 0.01 pCi/liter are claimed.[21]

One disadvantage of this technique is the degree of care needed in sampling, because of the small amount of activity present on the downstream filter. Another is that at relative humidities below about 25% the method has been found to yield results up to almost 20% too high.[20] The reproducibility of the method has been studied by Breslin,[14] who finds 10% to 20% replication errors.

Figure 3[22] shows a study of the accuracy of the two filter method, in which it is compared to measurements of flask samples analyzed in the laboratory using a pulse-type ionization chamber. The average precision of this method was about ± 20%.

Both the Lucas-chamber and two-filter methods appear to be satisfactory for routine use in the uranium mines. Although the standard Lucas chamber technique is simpler, it does not have the intrinsic sensitivity of the two-filter system for research-type studies.

Another technique, with sensitivity similar to that of these methods, is the use of a pulse-type ionization chamber. A sample of gas, collected through a filter to eliminate radon daughters, is admitted to the ion chamber and allowed to come to equilibrium before counting. This technique is described in detail in the Procedures Manual of the U.S.A.E.C. Health and Safety Laboratory.[23]

More elaborate techniques have also been developed for high-sensitivity studies, and these will be discussed next.

Sensitive methods for radon sampling with cooled activated charcoal have been used for many years. At low temperatures such as that of dry ice (-78° C), gaseous radon rapidly adsorbs on activated charcoal; radon can be subsequently de-emanated at temperatures of about 300° C, collected, and counted.

The Intersociety Committee's compilation of Tentative Methods for radon[24] describes one application of this technique. Figure 4 shows the collection apparatus. Filtered air is dehumidified in a drying column (e.g., Drierite) and any remaining water is trapped before the gas flows through the cooled activated charcoal. The cooling mixture is dry ice mixed with 1:1 chloroform and carbon tetrachloride.[25] Radon is transferred to the counting chamber along with helium carrier gas.

For counting of the gas, two different techniques are described by the Intersociety Committee.[24] In the first, the radon is transferred to a Lucas chamber, allowed to reach equilibrium with its daughters after a 4-hour wait, and counted. In the second, the collection trap is counted directly with a NaI(Tl) crystal, a photomultiplier, and a multi-channel analyzer. The 0.61 MeV and 1.76 MeV gammas from ^{214}Bi(RaC) are counted, after equilibrium has been established.

The methods are both quite sensitive. The NaI(Tl) system can detect ~0.12 pCi/liter of radon with a ±10% error at 95% confidence,[24] while the Lucas chamber method has been used to measure levels as low as about 0.010 pCi/liter with errors in the ±0.005 pCi/liter range.[25] The main disadvantage is, of course, that the apparatus is relatively sophisticated, expensive, and not very 'portable'. The NaI(Tl) gamma spectroscopy technique suffers from essentially no interferences, and

the interferences in the Lucas chamber approach are also small.

Two other highly-sensitive methods using air filters are also recommended by the Intersociety Committee.[24] Neither is applicable for uranium-mine measurements. Each relies upon the existence of radioactive equilibrium between radon and its daughters in the sampled air, and as such each is only useful for approximate environmental measurements.

The first of these methods uses alpha counting. The short-lived radon daughters are collected on a 0.8 micron pore size filter, which is nearly 100% efficient and also has very little self-absorption during counting. Because the half-lives in the RaA→ RaC′ chain are short, the collection and decay rates reach equilibrium after a few hours. A 4-hour sampling time is recommended, at about 10 liters/minute. The filter is counted with a zinc-sulfide alpha scintillation counter and a 2-inch photomultiplier tube, or alternatively with an internal gas proportional counter. The alphas from the two daughters RaA and RaC′ are counted. Using a counting time of 10 minutes, the lower detection limit is quoted as being about 0.030 pCi/liter, with counting error of ±10% at 95% confidence. Interferences can occur from the long-lived daughters of thoron (^{220}Rn), but these can be corrected for by re-counting the filter after a delay of 4 hours. Other alpha-emitters which might collect on the filter are plutonium-239, 240, 238; uranium-238 and 235; and radium-226; but none of these is usually present with sufficient activity to constitute an important background. Of course, the most important uncertainty in this type of measurement is the assumption that equilibrium exists in the air being sampled. In most environmental sampling

situations, this is not true and difficult to establish.

In the second Intersociety Committee air-filter method, beta activity is counted on the filter.[24] Because betas are easier than alphas to count, one can use a thicker filter and greater sampling volumes without problems of self-absorption or dust-loading. A positive-displacement blower forces air at 500 liter/minute through a 5-cm glass fiber filter. The activities to be counted are the betas from RaB and RaC. After 20 minutes of sampling and 1 minute for transfer, a 10 minute beta count is taken through 75 mg/cm^2 of absorber using an internal gas proportional counter or a Geiger-Müller counter. A concentration of 0.001 pCi/liter of radon in equilibrium with its daughters will yield 332.2 disintegrations of RaB and 416.9 of RaC in this time interval. A second count after 5 hours permits subtraction of possible thoron daughters. A more complex analysis procedure uses another 10-minute count after 1 hour to determine the RaB/RaC ratio, and hence the possible extent of disequilibrium in the original sample.[26]

Another, quite different monitor using Polaroid film and ZnS(Ag) phosphors has been developed by Bedrosian.[27] Figure 5 shows the device, consisting of fast Polaroid film in a holder containing two ZnS(Ag) disks, one covered by filter paper and the other not covered. The uncovered ZnS(Ag) phosphor responds to alphas from radon gas, RaA, and RaC′ in the ambient air; the covered phosphor responds only to alphas from radon gas, which diffuses through the filter. The images on the film, exposed by the scintillations from the ZnS(Ag), are measured with a reflection densitometer. Bedrosian claims a lower limit of sensitivity for radon gas of 200 pCi/liter after 15 hours of

exposure, and for radon daughters of less than 1 WL after 30 hours of exposure. This technique shows promise where levels are high, because the results are available within a few minutes after the end of an exposure, and the system is very inexpensive. Of course, it yields no information about the extent to which the ambient air being sampled is in equilibrium.

b. Working Level

Two types of Working Level (WL) measurements are required in uranium mines:

i) Measurements of WL at a given time and place

ii) Measurements of integrated exposure either for a worker or for a working area; these are usually expressed as Working Level Hours (WLH) or Working Level Months (WLM).

We shall discuss (i) here, leaving (ii) for a later sub-section.

The WL is defined as "any combination of radon daughters in one liter of air that will result in the ultimate emission of 1.3×10^5 MeV of potential alpha energy".[3] Of the daughters, RaB and RaC are beta/gamma emitters, so only the alphas from RaA and RaC′ decay need be measured. However, it must be emphasized that the sum energy considered in the WL contains contributions from the RaC′ alphas which arise from decay of the RaA, RaB, and RaC in the sample air. Figure 6[2] shows the growth of Working Levels in initially pure radon.

The use of an air filter is a feature common to many of the methods which we shall discuss. The filter collects the three daughters (RaA, RaB, and RaC), after which the decays are counted. If only

alphas are counted, then what matters is the activity of RaA and RaC′, the alpha-emitting daughters. Figure 7[1] shows the build-up and decay of alpha activity from individually isolated radon daughter isotopes, each with an initial decay rate of 10 dpm (= 4.5 pCi).

The most common method for measuring WL is the Kusnetz method. Originally developed in 1956,[28] it has been the mainstay of WL monitoring in the uranium mines ever since, and is now recommended by ANSI as the "standard method."[29] We shall begin by discussing it, before going on to recent or proposed improvements.

The Kusnetz method employs an air sampler (pump and filter) and an alpha counter (usually of the ionization chamber of zinc-sulfide-scintillation type).

The American National Standards Institute standard method[29] specifies sampling at 5 to 20 liters per minute (ℓpm) for five minutes; 10 ℓpm was the most common rate at the time ANSI 7.1 was written, producing a total sample volume of 50 liters. Today, ~2 ℓpm is more commonly used, as we shall mention below. After a delay of from 40 to 90 minutes (most commonly 40), the count rate in counts per minute is measured, using a rate meter. After determining disintegrations per minute (dpm) by correcting for the efficiency of the alpha detector, a tabulated scale factor is used to relate dpm to the WL in the original sampled air.

The main feature which commends the Kusnetz method is its relative insensitivity to the concentration ratios of the three daughters RaA, RaB, and RaC. The intrinsic error from not knowing the concentration ratios is at most $\lesssim 25\%$. For example, suppose a 40-minute delay before

counting; Rock et al.[31] show that if RaA:RaB:RaC concentrations are in the ratios of 100:100:100, 100:90:80, 100:45:35, and 100:15:6, the intrinsic error in determining WL from the data is only +7%, +8%, +2%, and -7%, respectively. Groer[32] has recently shown that in very "young" air, such as air in which only RaA has had much chance to grow in from the parent ^{222}Rn, the Kusnetz method underestimates the true WL by as much as 25%. Even so, since these errors are smaller than typical uncertainties in the way sampling represents true concentration, the Kusnetz method can be said to be intrinsically accurate enough for most purposes.

The minimum sensitivity of the Kusnetz method as just described has been studied by Breslin et al.[22] and shown in Figure 8. The precision is about ±15% at 0.3 WL but degenerates rapidly at lower concentrations. This increased error is mainly dominated by statistical fluctuations in the rate measurement[14] and is hence unavoidable. A full discussion by Loysen[33] of the various sources of error in the Kusnetz method indicates that with appropriate care, errors from sampling can be kept smaller than the counting (statistical) fluctuation.

The rate-meter measurement is one source of error which can be improved upon, by counting for a fixed period instead of by measuring rate. To improve the method's sensitivity, one must either sample more air or count for a longer time. In a laboratory environment, Breslin[14] counted for four minutes (from +38 to +42 minutes) using an alpha scintillation/scaler instrument. Using this "modified Kusnetz method," reproducibility was found to be ±4.2%, ±14%, and ±35% at mean levels of .041, .0029, and .00046 WL, respectively. This indicates that this modified method is intrinsically sensitive enough for

almost any application.

There are problems with the Kusnetz method, however. The 10-ℓpm air pumps typically used are heavy and cumbersome, and there has been a recent switch to smaller, lightweight 2-ℓpm pumps.[31] At concentrations above about 0.3 WL, the 2-ℓpm and 10-ℓpm pumps, both sampling for five minutes, gave reasonably reproducible and comparable results.[31] Of course, at low WL ranges the lower volume of air sampled with the 2-ℓpm pump will seriously degrade the sensitivity.

Membrane filters have been most widely used because of their 99+% retention of submicron particles and because the particles are mostly deposited right at the filter surface, minimizing absorption of the alphas during counting.[30] Glass fiber filters, equally efficient as collectors, can suffer from more penetration and hence more important self-absorption corrections; but recent tests indicate that most commercial glass filters now have little problem with self-absorption.[31] Direct moisture on the filter face can cause absorption problems for any of the filters as well as pressure problems in pumping.

Air pump flowmeters are an especially tricky problem because their calibration is density-dependent, and hence will vary if an instrument calibrated at sea level is used at elevations well above sea level, where many radon measurements are made. The details of this problem are discussed in the Bureau of Mines Handbook.[31]

An advantage of the Kusnetz method is that the alpha-detection system, which must respond only to RaC′ alphas (7.69 MeV), need not have an energy-independent response. The detection efficiency at that one energy must be known, of course. The Bureau of Mines Handbook[31] discusses both laboratory and field calibration procedures.

One need still awaiting a solution is that of a good, light-weight electronic scaler. We quote from Breslin:[14] "Commercial scalers employed by mine operators have not been found to be satisfactory, either being too slow in the case of mechanical counters or too bulky in the case of electronic counters." Breslin recommends the commercial development of an alpha counter weighing less than ten pounds, with 4-decade scaler display, 8-hour battery lifetime before recharge, and a variable preset timer.

Perhaps the biggest drawback of the Kusnetz method is the minimum 45-minute delay from start to finish. This inherent difficulty has stimulated the development of other WL techniques.

A method developed by Rolle in 1969[34] and described further in a 1972 paper[35] makes possible much more refined measurements, using equipment identical to that of the Kusnetz method. Rolle describes how the choice of counting time affects systematic error, and indicates that intrinsic errors can be kept below about ±12% with counting for 10 minutes after about a five-minute wait. Rolle also discusses in detail the way volumetric and radiometric errors limit ultimate uncertainties to the ±20% range.

The methods just described all require a considerable time delay between the start of sampling and the end of counting: the Rolle method takes about 20 minutes, the Kusnetz upwards of 45. This has motivated the development of several prototype "Instant Working Level Meters" (IWLM's).

Two different versions of such an instrument were developed in 1968-69 to provide for the rapid, automatic measurement of WL.

The manufacturers were GeoCon Corp.[36] and Bedford Engineering Corp.[37], the latter working with an MIT group.[38] Neither unit is now commercially available.

The idea of the IWLM is to count the accumulating activity as it collects on a membrane filter. The RaA and RaC′ alphas, and also the total beta activity, are counted with separate detectors right next to the filter. Electronic circuitry is used to calculate WL, which is displayed directly on a meter. The total time required for one measurement is about 4-5 minutes.

Unfortunately, Breslin[14] indicates that "reproducibility, calculated from paired measurements, was about ± 50% for the GeoCon, and about ± 100% for the MIT-Bedford. . . . Based on these tests, neither instrument has sufficient reliability for use in mines." The instruments discussed were also bulky, heavy (15-20 lb) and awkward to operate.

Further development work on an improved IWLM is being carried on by Groer[39] at Argonne National Laboratory. The signal/background ratio will be improved by increasing the pumping rate to 12 ℓpm (for a 4-minute sample time), and by using a very thin (~ 0.008 cm) plastic scintillator for beta detection, to decrease background from external gamma radiation. The proposed device will calculate not only WL, but also the three individual daughter concentrations, using a small digital calculator. The hoped-for sensitivities are about 0.01 WL and about 1 pCi/liter for each of RaA, RaB, and RaC. If successfully developed, this instrument will be of major importance for uranium-mine measurement.

Another development project is being carried out at Colorado State University by a group under Schiager.[40] A membrane filter sample is taken by manually turning a pump (one liter/stroke), and WL is determined approximately by measuring RaA and RaC′ separately with a surface barrier detector. No beta radiation is measured, but WL is 'calculated' by an electronic weighting procedure: the sum (RaA + 8 RaC′) or(RaA + 10 RaC′) is used as a measure of WL. Figure 9 shows how such a procedure yields results within ±10 to ±15% of WL over most of the range from equilibrium to complete disequilibrium. Prototypes are now being field-tested (early 1973). The chief advantages, if successful, will be light weight, ruggedness, low unit cost, and rapidity of measurement (about two minutes).

c. Measurements of Individual Radon Daughters in Air

The ability to isolate the relative activities of individual radon daughters in an unknown atmosphere is of great use. In an equilibrium atmosphere, of course, all of the short lived daughters have activities equal to that of the parent; the relative activities are used to determine the degree to which equilibrium has been achieved. Another measurement problem is the determination of the "uncombined RaA fraction," that is, the fraction of RaA in the sample atmosphere which is free and not combined with particulate matter.

Even with its short (3-minute) half-life, the first radon daughter, RaA (^{218}Po), is not always in equilibrium with the parent radon. The subsequent daughters are nearly always only partially ingrown, especially in well-circulated air. This is true in environmental as well as in uranium-mine atmospheres.

We have already discussed one technique[26] for measuring the RaB/RaC ratio using the air filter/beta counting technique. This is a complex technique which is not very sensitive unless the RaB/RaC ratio is very large or very small. It is not often used for these reasons.

Two more useful approaches are the Tsivoglou method, involving several counting intervals, and the use of alpha spectroscopy.

The Tsivoglou method[41] is one of the oldest techniques for radon daughter determinations. It employs an air filter and an alpha counter/rate-meter, apparatus similar to that required by the Kusnetz method for WL, and the technical considerations required to obtain good data are similar also. One key difference is that the alpha counter response must be energy independent, which is not required in the Kusnetz method. (The Bureau of Mines Handbook[31] discusses calibration procedures in detail.) After the air sample is taken (typically for 10 minutes at 5 ℓpm), the alpha count rate is measured at three later times: after delays of 5, 15, and 30 minutes. RaA, RaB, and RaC concentrations are then determined by solving three simultaneous equations.

Unfortunately, studies by Breslin et al.,[22] with 100-liter sample volumes at concentrations of 0.5 to 5 WL, indicate that reproducibility is poor for identical repeat measurements: RaB/RaA ratios and RaC/RaA ratios had replication errors in the 15-25% and 25-35% ranges, respectively.

This problem has motivated work on improvements in the method. The simplest improvement is similar to the way the original Kusnetz method can be improved: use of count totals rather than count rates. Thomas,[42] using a five minute sampling time at 10 ℓpm, has taken

count totals in three time intervals: 2 to 5, 6 to 20, and 21 to 30 minutes. He is able to express RaA, RaB, and RaC concentrations directly in terms of the three count totals: essentially, the simultaneous equations are solved and the matrix inverted. The precision of the determinations is good according to calculations. Quoting Breslin:[14] "At ... 0.3 WL and a radon daughter ratio of 100:30:10, ... the calculated precisions for RaA, RaB, and RaC measurements are 4%, 4%, and 12%, respectively."

This modified-Tsivoglou technique can also be used for WL measurements, and the results are comparable to those obtained with the modified Kusnetz method. However, because of the added complication, the method is probably not to be preferred when WL measurements alone are required, unless accuracy is at a high premium.

A theoretical analysis of the Tsivoglou method, extending the treatment to any number of general counting times, has been given by Martz et al.[43]

Alpha spectroscopy is another useful approach for measuring individual radon daughter concentrations. Instead of using the air filter/alpha counting technique, one can substitute an alpha spectrometer for the alpha detector system. Several types of alpha spectrometers have been developed, none of which will be discussed directly here. The best resolutions are now obtainable with solid state detector systems. The alpha lines requiring resolution and measurement have energies of 6.00 MeV (RaA) and 7.69 MeV (RaC′).

The method developed by Martz et al.[43] uses a solid-state detector and multichannel analyzer, with a 4.3-ℓpm collection rate onto a

membrane filter. Separate determinations of the RaA and RaC′ alpha activities are made at two times, 5 and 30 minutes after sampling. This leaves only two simultaneous equations (compared to the three required in the Tsivoglou method) to determine the relative daughter concentrations.

The main advantage of this method is its improved accuracy in determining the short-lived (3-min) RaA: the RaA alpha is counted directly. In experimental comparisons with the Tsivoglou method, Martz et al.[43] found that the spectroscopic method was significantly more precise for both RaA (8% standard deviation compared to 29%) and RaC (14% compared to 27%), and comparable for RaB (12%). This approach thus appears to be promising, albeit one requiring more expensive and elaborate instrumentation. It is obviously possible to use alpha spectroscopy in uranium mines, but this is probably difficult because of the inconvenience. The better accuracy for RaA would tend to be nullified by the delay in taking mine samples out to surface counting equipment, and hence this technique is probably most applicable to environmental samples.

A more complicated analysis technique has been developed by Raabe and Wrenn,[44] who generalize the Tsivoglou method by performing a regression analysis to fit mathematically the observed count totals during various counting periods. Thus one would not be limited to three count periods and three simultaneous equations. Also, simultaneous determinations of thoron daughters are possible. Measurements with the system over 7 time intervals (the last 3 hours after taking a one-minute, 7.5-liter sample) are clearly more accurate than those of the

Tsivoglou method, but the complicated analysis is probably only useful when research work requires high sophistication and accuracy.

Before leaving the subject of individual radon daughter measurements, a brief discussion of "uncombined RaA fraction" determinations will be given. The ICRP[7] has noted that the fraction of RaA which is not combined with particulate matter seems to play a major role in the radiobiological impact of the radon daughters. One possible explanation for this is that they are exceedingly active, owing to their high diffusion velocity. This has motivated attempts to measure this uncombined fraction (f). These measurements are mostly performed for research purposes rather than in routine monitoring.

Duggan and Howell[45] describe a system in which two filters sample the atmosphere side by side. One of them is "preceded by a diffusion battery designed to remove most of the unattached daughters but hardly any of the attached ones."[45] RaA is distinguished from RaC′ by alpha spectroscopy. Another method has been described by Fusamura and Kurosawa,[46] in which gas is passed through a diffusion tube, and the differing diffusion coefficients are relied upon to bring about a partial separation. In this way, f-values in the range 6 to 25% were measured to within better than a factor of 2. Another device based on diffusion has been described by Mercer and Stowe.[47] It is shown in Figure 10.[48] "Air enters through an orifice in the center of the upper of two discs and flows radially outward between the discs and down past the edge of the lower disc."[48] As much as 80% of unattached RaA atoms (and typically 60 to 70%) can be collected on the discs.[47] Using this system, George and Hinchliffe[48] measured f-values below 0.10

with precisions in the range of ±0.007 to ±0.014.

d. Personnel Dosimeters

The usefulness of Working Level dosimetry for occupational workers is obvious: a portable instrument which could accurately integrate WL exposure over time would help to provide for the radiological protection of any occupationally exposed individuals (e.g., miners). Present dosimetry is done by measuring WL and correlating with the amount of time spent in each of the various working areas by a worker. This present method has, of course, served a valuable purpose over a long period, and has certain advantages over dosimeters, among which are that measurements are made by trained personnel with less inconvenience for the miner. In any event, such WL measurements will always be required to supplement a personnel dosimetry system even if it achieved wide acceptance.

The requirements of a personnel dosimeter are that it should be sensitive down to an integrated exposure of, say, less than about 1 WL-hour; that it be capable of weekly or bi-weekly readout; that it properly sample the air being breathed; and that it be light, rugged and failsafe.

A number of development efforts in recent years have been directed toward this problem. White of the U.S.A.E.C. Health and Safety Laboratory performed three sets of evaluations of several of the dosimeters,[49, 50, 51] which Breslin[14] has summarized. The various dosimeters employed different kinds of detectors: some had pumps and filters and some sampled passively; some were sensitive to radon gas, some to the radon daughters, and one to both. Their properties are given in Table 2.

White's tests of the two dosimeters designed to measure radon gas showed that neither performed satisfactorily in laboratory standardization tests.[49] One of these was an alpha-track-count film detector from Eberline,[52] the other a ZnS(Ag) scintillator with film recording from NYU.[53] One gave responses which varied by factors of as much as 10 when repeat runs were taken; the response of the other varied by a factor of as much as 3, but the dosimeter only increased its response by a factor of about 3 when radon concentration increased by a factor of 10.

Of the six dosimeters responsive to radon daughters (or radon gas plus daughters), the responses of 5 were judged to be much poorer than 'satisfactory'.[49, 50, 51] The best performance was that of the HASL dosimeter, called the "MOD". The reason for this is partly that the MOD's design occurred later than, and was able to profit from, the designs of some of the others.

There were a variety of reasons for the poor performances of the other dosimeters. These are the units from Oak Ridge,[54] MIT, Colorado State University,[55] and General Electric.[56, 57] In the mine tests, the harsh conditions of use (mechanical abuse, high humidity, corrosion problems, mud on the detectors and filters, pump failure) caused many problems. For most of the unsatisfactory units, reproducibility was poor; and the results of a comparison study (in which two similar units were worn together by the same miner) were also poor.

Unfortunately, the performance even of the MOD dosimeter was still less than fully satisfactory in White's last test.[51] Figure 11[51] shows White's mine data, comparing response to WL-hours of exposure.

The paired measurements joined by vertical lines denote data from duplicate dosimeters worn by the same miner. Among the problems was the pump, which was specially redesigned after the experience with the earlier dosimeters, but which still suffered from occasional leakage of dirt into the pump casing. Also, dosimeter response to external (beta and gamma) radiation was a problem. Both of these can be corrected, the latter by use of a normal TLD dosimeter to measure the beta-gamma background. The replication error of the MOD dosimeter was about 15%. Work is now underway at HASL[14] to improve the pump still further.

A research program on radon dosimetry based on an alpha track-etch method is now going on under Benton at the University of San Francisco.[58] This approach is similar to that used in the General Electric dosimeter,[56] one of those tested and found unsatisfactory by White.[49] Small plastic polymers have been successfully used for dosimetry in space applications, and Benton's project hopes to improve their applicability in uranium-mine dosimetry.

6. SUMMARY AND CONCLUSIONS

In this section, we have attempted to outline the various techniques for measuring radon-222 and its daughters in uranium mines and in environmental media. There are several quite different measurement problems, and we shall summarize the situation in each area separately:

a) Radon as Gas

Two simple methods exist for radon measurements in the concen-

tration range down to below 10 pCi/liter. These are the Lucas chamber[16] and two-filter method.[20] Both appear to be satisfactory for routine use in the uranium mines, and each can be modified for sensitivities below 1 pCi/liter. For environmental measurements, where sensitivities well below 0.1 pCi/liter are sometimes required, several more elaborate methods have been developed. The situation appears to be satisfactory, since the elaborate methods, usually used only in research applications, probably do not merit significant improvement effort at this time.

b) Working Level Measurement

The Kusnetz method,[28] used for many years as a standard technique in the uranium mines, is not sensitive enough to measure WL in the range below about 0.3 WL. The 'modified Kusnetz method'[14] and the method developed by Rolle[34, 35] are both sensitive enough ($\lesssim$ 0.01 WL) to meet almost any need. Unfortunately, although the other components of the measurement system are available, there does not yet exist an alpha-counter-with-scaler adequate to the task for use in the mines. Furthermore, neither of the methods gives an immediate answer, the delays being about 45 minutes (modified-Kusnetz) and 20 minutes (Rolle).

A more rapid WL monitor has still not been successfully developed, although some progress in this regard has occurred recently. In particular , the development project under Schiager[40] may soon produce an instrument which is portable, simple, and inexpensive (although not as accurate as might ultimately be desired). Also, the development project under Groer[39] shows great promise for the

combined measurement of WL and individual daughter concentrations.

One point which must be borne in mind is that the total market even for an excellent WL meter is probably quite limited, so that commercial exploitation might not occur once an instrument is developed.

On the other hand, the assessment of occupational integrated exposure will probably be performed for some time to come by combining WL area measurements with worker area-time records. Thus the premium on a rugged, reliable, accurate and rapid instrument is still important.

c) Individual Radon Daughters

A number of methods, all variations upon the long-established Tsivoglou technique,[41] rely upon measuring activity collected on an air filter. To determine the activity ratios of several daughters, several measurements at different times (after collection) are required. The most precise of these techniques, that of Martz et al.,[43] uses alpha spectroscopy instead of alpha counting.

The usefulness of instruments of this type is undisputed, but their value is to mining ventilation engineers rather than for broad-based radiological monitoring. Unfortunately, this is a small market, which would probably not merit the commercial development of a fully-automatic instrument. Such an instrument might have a preset clock to measure the air sample at the appropriate times; and it might calculate the RaA/RaC and RaA/RaB ratios automatically, as well as the WL value. This seems like an instrument easy to design and build but unlikely to be developed in the near future. Alternatively, the development project under Groer seems possibly capable of filling this need,

since the instrument is designed to yield individual radon-daughter concentrations down to the level of 1 pCi/liter.

d) Personnel Dosimeters

The MOD dosimeter under development at HASL[51] seems to be on the verge of success, in which case it should be given extensive field tests in the mines. The fact that several other prototype dosimeters did not operate satisfactorily should not discourage further attempts, since some of the other techniques deserve another try. In particular, the polymer alpha-etch technique being studied by Benton[58] seems capable of possible application, as does the Oak Ridge alpha track count technique.[54]

In conclusion, much instrumentation in this area of measurement is less than satisfactory. We have attempted to illustrate those techniques which show the greatest promise for further exploitation, but ultimately the problem with all of the instruments is that their expense will limit their use, and their limited potential use will discourage commercial development--unless use of an instrument is mandated by the Bureau of Mines. Finally, the need for instruments which are simple to operate in the mines must be emphasized, since the general lack of skill among many mine monitoring personnel is recognized by all.

7. ACKNOWLEDGMENT

The constant support and encouragement of D. A. Mack and R. M. Graven is gratefully acknowledged, as is the generous advice and review of A. J. Breslin, P. G. Groer, G. A. Morton, and K. J. Schiager.

This research was conducted in conjunction with a "Survey of Instrumentation for Environmental Monitoring,"[59] which was funded under Grant No. AG-271 from Research Applied to National Needs, National Science Foundation, and performed at the University of California, Lawrence Berkeley Laboratory in facilities provided by the U. S. Atomic Energy Commission.

The mention of commercial products, their source or their use in connection with material reported herein is not to be construed as either an actual or implied endorsement of such products. The opinions expressed herein do not necessarily express the opinion of the National Science Foundation, the Atomic Energy Commision, or the University of California.

8. REFERENCES

1. U. S. Public Health Service, Control of radon daughters in uranium mines and calculations on biologic effects. Publication No. 494. Washington, D.C. (1957).
2. R. D. Evans, Health Phys. 17, 229 (1969).
3. R. L. Rock, D. K. Walker, R. W. Dalzell, and E. J. Harris, Controlling employee exposure to alpha radiation in underground uranium mines. U. S. Bureau of Mines Handbook (1970).
4. U. S. Secretary of Labor, Federal Register, Vol. 33, No. 252, 28 December 1968.
5. U. S. Dept. of Interior, Federal Register, Vol. 34, No. 11, 16 January 1969.
6. U. S. Federal Radiation Council, Guidance for the control of radiation hazards in uranium mining. Report FRC No. 8 (revised) Washington, D.C. (1967).
7. International Commission on Radiological Protection, Publication No. 6 Pergamon Press, Oxford (1964).
8. International Commission on Radiological Protection, Report of Committee II on permissible dose for internal radiation, Publication No. 2. Pergamon Press, Oxford (1959).
9. National Council on Radiation Protection and Measurements, Maximum permissible concentrations of radionuclides in air and in water for occupational exposure. National Bureau of Standards Handbook 69. Washington, D.C. (1959).

10. S. D. Shearer and C. W. Sill, Health Phys. 17, 77 (1969).

11. U. S. Bureau of Radiological Health, Evaluation of radon-222 near uranium tailings piles, Report DER 69-1. Rockville , MD 20852 (1969).

12. U. S. Atomic Energy Commission, Grand Junction remedial action: Proposed criteria, Federal Register 37, No. 203, 19 October 1972.

13. J. E. Pearson, Natural environmental radioactivity from radon-222, U. S. Public Health Service Pub. No. 999-RH-26 (1967).

14. A. J. Breshlin, Monitoring instrumentation in the uranium mining industry, unpublished report (1972).

15. International Atomic Energy Agency, Radiological health and safety in mining and milling of nuclear materials, Vols. 1 and 2. Vienna (1963).

16. H. F. Lucas, Rev. Sci. Instr. 28, 680 (1957).

17. J. Kristan and I. Kobal, Health Phys. 24, 103 (1973).

18. F. B. Johns, Southwestern Radiological Health Laboratory Handbook of Radiochemical Analytical Techniques, Report SWRHL-11 (1970). Available from SWRHL, now EPA National Environmental Research Center, Las Vegas, NV 89114.

19. American Public Health Association, Standard Methods for the Examination of Water and Wastewater, 13th Edition, 1015 - 18th St., N.W., Washington, D.C. (1971).

20. J. W. Thomas and P. C. LeClare, Health Phys. 18, 113 (1970).

21. H. Newstein, L. D. Cohen and R. Kablin, Atomic Environment 5, 823 (1971).

22. A. J. Breslin, A. C. George and M. S. Weinstein, Report HASL-220, U.S.A.E.C. Health and Safety Laboratory, 376 Hudson Street, New York, NY 10014 (1969).

23. J. H. Harley (editor), HASL Procedures Manual, Report HASL-300, U.S.A.E.C. Health and Safety Laboratory, 376 Hudson Street, New York, NY 10014 (1972). Earlier editions of this Manual were published as Report NYO-4700.

24. Intersociety Committee for a Manual of Methods for Ambient Air Sampling and Analysis. Methods of Air Sampling and Analysis, American Public Health Association, 1015 - 18th Street, N.W., Washington, D.C. 20036 (1972).

25. G. E. Jones and L. M. Kleppe, Report UCRL-16952, unpublished (1966). Lawrence Berkeley Laboratory, Berkeley, CA 94720.

26. L. B. Lockhart, R. L. Patterson, and C. R. Hosler, Report NRL-6229 (1965) and Report NRL-6374 (1966). U. S. Naval Research Laboratory, Washington, D.C.

27. P. H. Bedrosian, Health Phys. 16, 800 (1969).

28. H. L. Kusnetz, Am. Ind. Hyg. Assn. Quarterly 17, 85 (1956).

29. American National Standards Institute, (ANSI) N7.1, Radiation protection in uranium mines and mills (concentrators), 1430 Broadway, New York, NY 10018 (1960). This is under revision, and will soon be superseded by ANSI N13.1 (Ref. 30).

30. American National Standards Institute, (ANSI) N13.1, Radiation protection in uranium mines, 1430 Broadway, New York, NY 10018 (1972).

31. R. L. Rock, D. K. Walker, R. W. Dalzell and E. J. Harris, Controlling Employee Exposure to Alpha Radiation in Underground Uranium Mines, U. S. Bureau of Mines Handbook Volumes I and II (1970 and 1971).

32. P. G. Groer, Health Phys. 23, 106 (1972).

33. P. Loysen, Health Phys. 16, 629 (1969).

34. R. Rolle, Am. Ind. Hyg. Assn. J. 30, 153 (1969).

35. R. Rolle, Health Phys. 22, 233 (1972).

36. GeoCon, Inc., 71 Rogers Street, Cambridge, MA 02142.

37. Bedford Engineering Corporation, Bedford, MA.

38. P. G. Groer, R. D. Evans and D. A. Gordon, Health Phys. 24, 387 (1973).

39. P. G. Groer, Argonne National Laboratory, private communication (1972)

40. K. J. Schiager, Colorado State University Report COO 1500-17 (1970). Ft. Collins, CO 80521.

41. E. C. Tsivoglou, H. E. Ayer and D. A. Holaday, Nucleonics 11, 40 (Sept. 1953).

42. J. W. Thomas, Health Phys. 23, 783 (1972).

43. D. E. Martz, D. F. Holleman, D. E. McCurdy and K. J. Schiager, Health Phys. 17, 131 (1969).

44. O. G. Raabe and M. E. Wrenn, Health Phys. 17, 593 (1969).

45. M. J. Duggan and D. M. Howell, Health Phys. 17, 423 (1969).

46. N. Fusamura and R. Kurosawa, p. 213 in Assessment of Airborne Radioactivity. International Atomic Energy Agency, Vienna (1967).

47. T. T. Mercer and W. A. Stowe, Health Phys. 17, 259 (1969).

48. A. C. George and L. Hinchliffe, Health Phys. 23, 791 (1972).

49. O. White, Jr., Report HASL TM 69-23 A (1969). Available from U.S.A.E.C. Health and Safety Laboratory, 376 Hudson Street, New York, NY 10014.

50. O. White, Jr., Report HASL TM 70-3 (1970). Available from U.S.A.E.C. Health and Safety Laboratory, 376 Hudson St., New York, NY 10014.

51. O. White, Jr., Report HASL TM 71-17 (1971). Available from U.S.A.E.C. Health and Safety Laboratory, 376 Hudson St., New York, NY 10014.

52. E. L. Geiger, Health Phys. 13, 407 (1967).

53. C. Costa-Ribeiro, J. Thomas, R. T. Drew, M. E. Wrenn and M. Eisenbud, Health Phys. 17, 193 (1969).

54. J. A. Auxier, K. Becker, E. M. Robinson, D. R. Johnson, R. H. Boyett and C. H. Abner, Health Phys. 21, 126 (1971).

55. D. E. McCurdy, K. J. Schiager, and E. D. Flack, Health Phys. 17, 415 (1969).

56. D. B. Lovett, Health Phys. 16, 623 (1969).

57. R. L. Rock, D. N. Lovett and S. C. Nelson, Health Phys. 16, 617 (1969).

58. E. V. Benton, University of San Francisco, private communication (1972).

59. Environmental Instrumentation Group, Lawrence Berkeley Laboratory, Survey of Instrumentation for Environmental Monitoring, Report LBL-1 (1973).

TABLE 2.

Radon Dosimeters

Source	Ref.	Atmospheric Component Detected	Type of Detector	Location		Pump Air Flow (liters/min)	Effective Range of Measurement	Total Wgt. (oz)	Period of Operation (hours)
				Pump	Detector				
Health & Safety Lab.	51	Rn dtrs	TLD (LiF)	belt	hat	0.100	3 - 1000 WL-hr	28	> 9
Oak Ridge Natl. Lab.	51, 54	Rn dtrs	αtrack etch	hat	hat	0.021	1 - 400 WL-hr	2	>13
Mass. Inst. of Tech.	50	Rn dtrs	TLD (CaF_2:Dy)	belt	hat	0.100	.026 - 2 x 10^5 WL-hr	7	9
Colo. State Univ.	49, 55	Rn dtrs	TLD (LiF)	belt	hat	0.170	.025 - 6 x 10^6 WL-hr	24	40
Eberline Inst. Co.	49	Rn dtrs	αtrack count	belt	belt	0.015	4 - 600 WL-hr	12	10
General Elect. Co.	49, 56	Rn and Rn dtrs	αtrack etch	——	hat	passive	5 - 100 WL-hr	<1	unlimited
Eberline Inst. Co.	49, 52	Rn	αtrack count	——	hat	passive	4 - 1000 $\frac{pCi\text{-}hr}{cc}$	1	unlimited
New York Univ.	49, 53	Rn	scint. +film	——	——	passive	10 - 200 $\frac{pCi\text{-}hr}{cc}$	4	unlimited

TABLE 1.

Main sequence of decays from uranium-238 to lead-206. Three very weak collateral branch disintegrations, all with branching ratios less than 0.1%, are omitted.
(from Ref. 1)

Common name or symbol	Isotope	Half life	Principal radiations	Alpha energy (MeV)	Gamma-ray quanta per disintegration	Average gamma-ray energy (MeV)
Uranium I	Uranium^{238}	4.49 x 10^9 years	α	4.18		
Uranium X_1	Thorium^{234}	24.1 days	β			
Uranium X_2	Protactinium^{234}	1.17 minutes	β			
Uranium II	Uranium^{234}	248,000 years	α	4.76		
Ionium	Thorium^{230}	80,000 years	α	4.68 (75%) 4.61 (25%)		
Radium	Radium^{226}	1,602 years	α	4.78 (94.3%) 4.69 (5.7%)		
Radon	Radon^{222}	3.825 days	α	5.486		
Radium A	Polonium^{218}	3.05 minutes	α	5.998		
Radium B	Lead^{214}	26.8 minutes	β γ		.82	.295
Radium C	Bismuth^{214}	19.7 minutes	β γ		1.45	1.050
Radium C'	Polonium^{214}	164 μsec	α	7.68		
Radium D	Lead^{210}	22 years	β γ		1.	.047
Radium E	Bismuth^{210}	5.02 days	β			
Radium F	Polonium^{210}	138.3 days	α	5.298		
Radium G	Lead^{206}	Stable	Stable			

FIGURE CAPTIONS

FIGURE 1. Growth of activity of the individual short-lived decay products in a constant source of radon having unit activity (from Ref. 2).

FIGURE 2. Lucas chamber. Photomultiplier tube, which views the ZnS(Ag) scintillations through the quartz window, is not shown (Ref. 16).

FIGURE 3. Comparison of field measurements by the two-filter method and the flask method for radon determination (Ref. 22).

FIGURE 4. Sampling apparatus for collection of gaseous airborne radon (from Ref. 24).

FIGURE 5. Schematic of Poloroid Land 4" × 5" film system used as a radon monitor. The film holder contains two aluminized mylar-covered ZnS(Ag) windows, one of which (A) is exposed and the other (B) covered by filter paper. Except for the filter paper, both windows are identical and consist of elements indicated in the inset (from Ref. 27).

FIGURE 6. Growth of Working Levels in initially pure radon (e.g., freshly filtered air). Note that the earliest contribution to WL is from Radium A, then Radium B, and still later Radium C (from Ref. 2).

FIGURE 7. Build-up and decay of alpha activity from individual initially isolated radon daughter isotopes, RaA through RaC, with an initial disintegration rate for each isolated isotope of 10 disintegrations per minute (from Ref. 1).

FIGURE 8. Precision for measurements of Working Level by Kusnetz Method (from Ref. 22).

FIGURE 9. Theoretical survey-meter response (cpm per WL) as a function of the degree of equilibrium of airborne radon progeny (pCi RaA per WL-liter) (from Ref. 40).

FIGURE 10. Diffusion sampler for uncombined radon daughters (from Ref. 48).

FIGURE 11. MOD Dosimeter-Mine Data (from Ref. 51). The paired measurements joined by vertical lines denote data from duplicate dosimeters worn by the same miner. The solid line shows the least squares best fit. The dashed lines show the mean and 95%-confidence level from laboratory standardization runs.

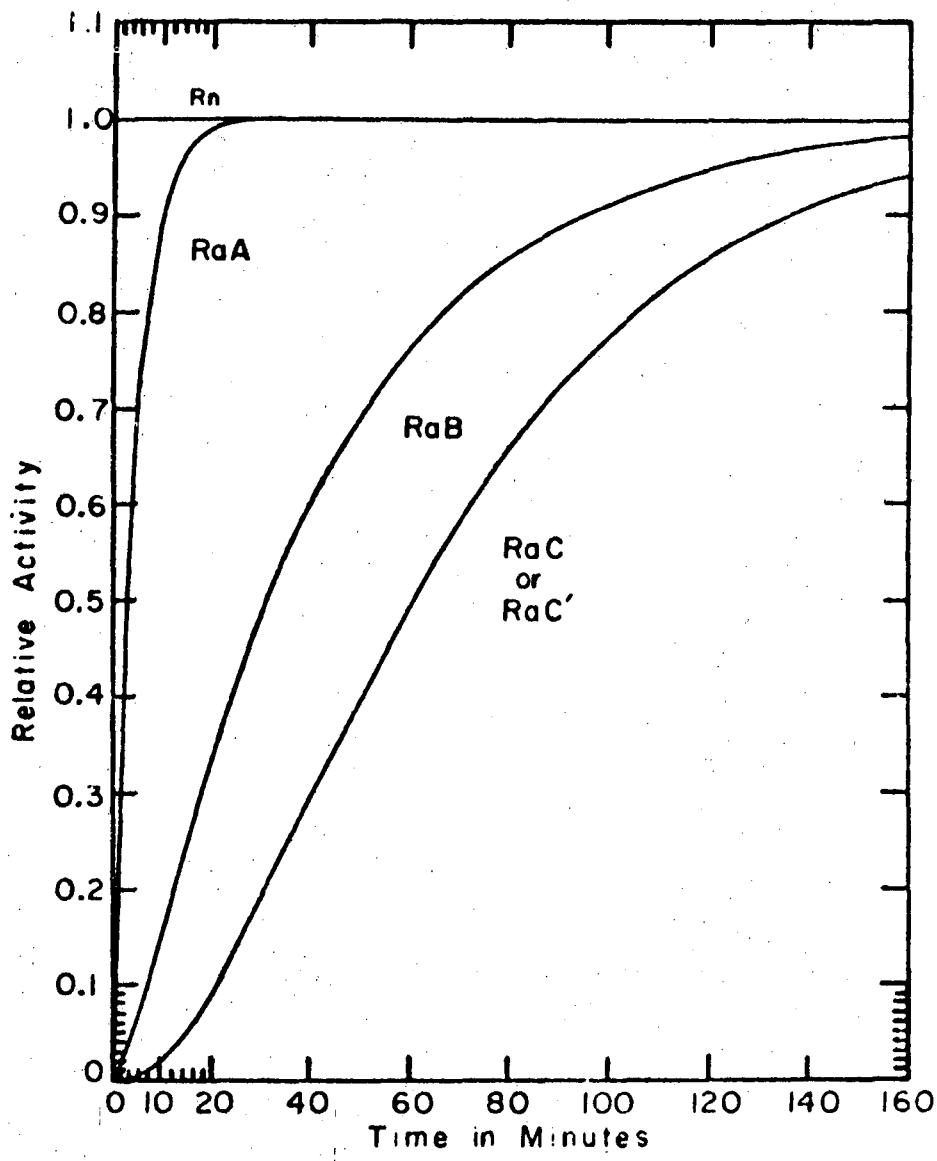
Rn
RaA
RaB
RaC
or
RaC′
Relative Activity
1.1
1.0
0.9
0.8
0.7
0.6
0.5
0.4
0.3
0.2
0.1
0
0 10 20 40 60 80 100 120 140 160
Time in Minutes

Fig. 1

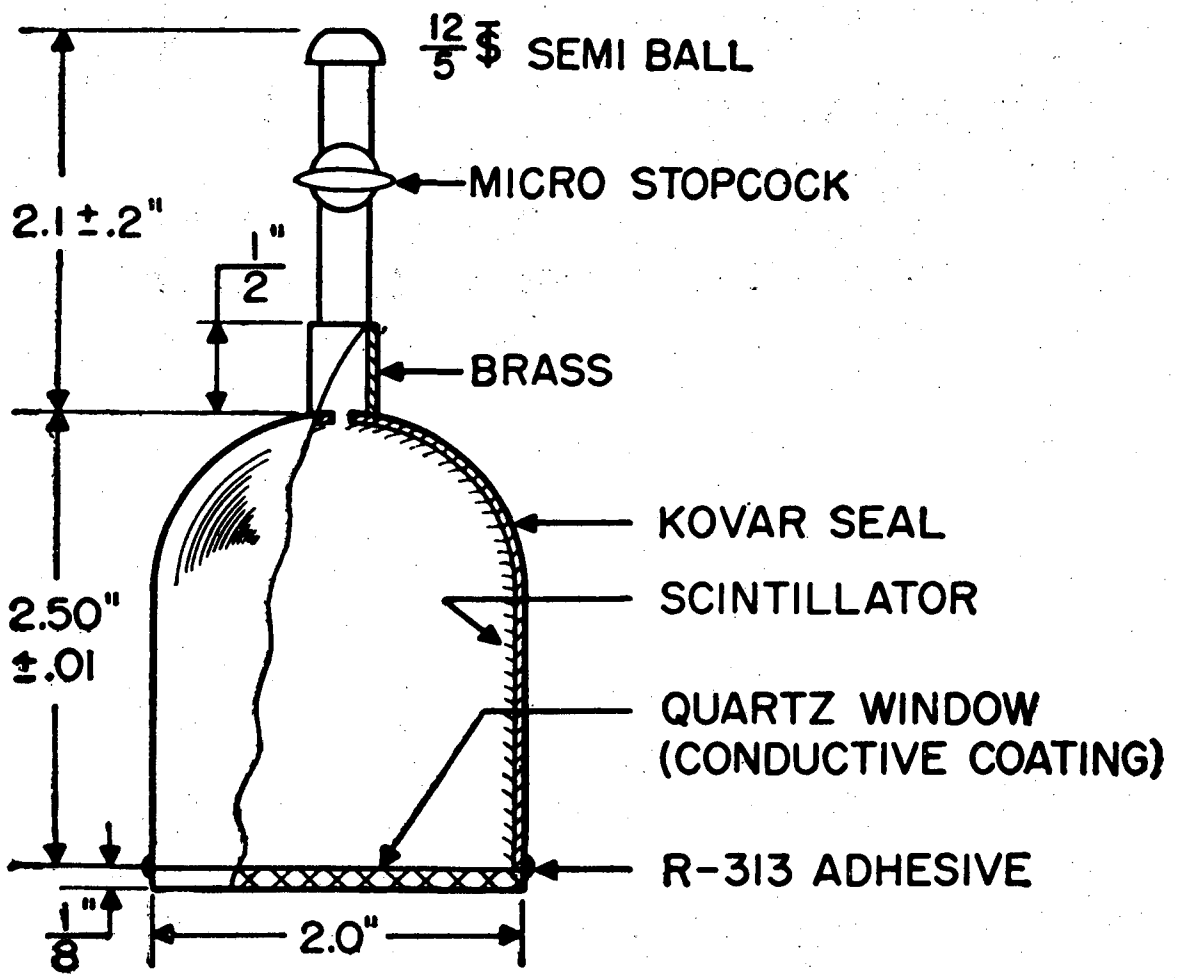
12/5 ∓ SEMI BALL
MICRO STOPCOCK
2.1 ±.2"
1"/2
BRASS
KOVAR SEAL
SCINTILLATOR
2.50"
±.01
QUARTZ WINDOW
(CONDUCTIVE COATING)
R-313 ADHESIVE
1"/8
2.0"

Fig. 2

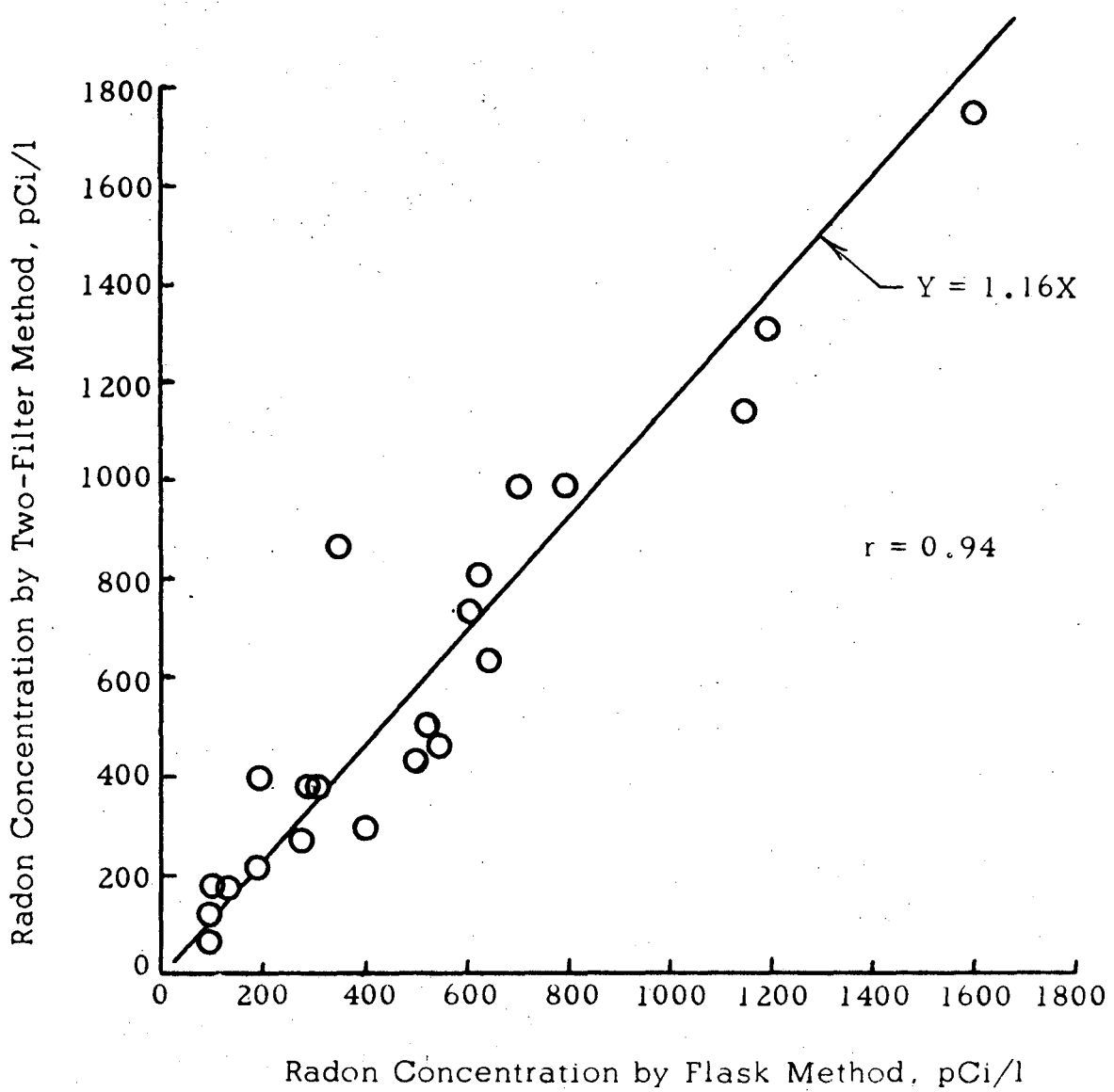
Radon Concentration by Two-Filter Method, pCi/l
1800
1600
1400
1200
1000
800
600
400
200
0
0
200
400
600
800
1000
1200
1400
1600
1800
Y = 1.16X
r = 0.94
Radon Concentration by Flask Method, pCi/l

Fig. 3

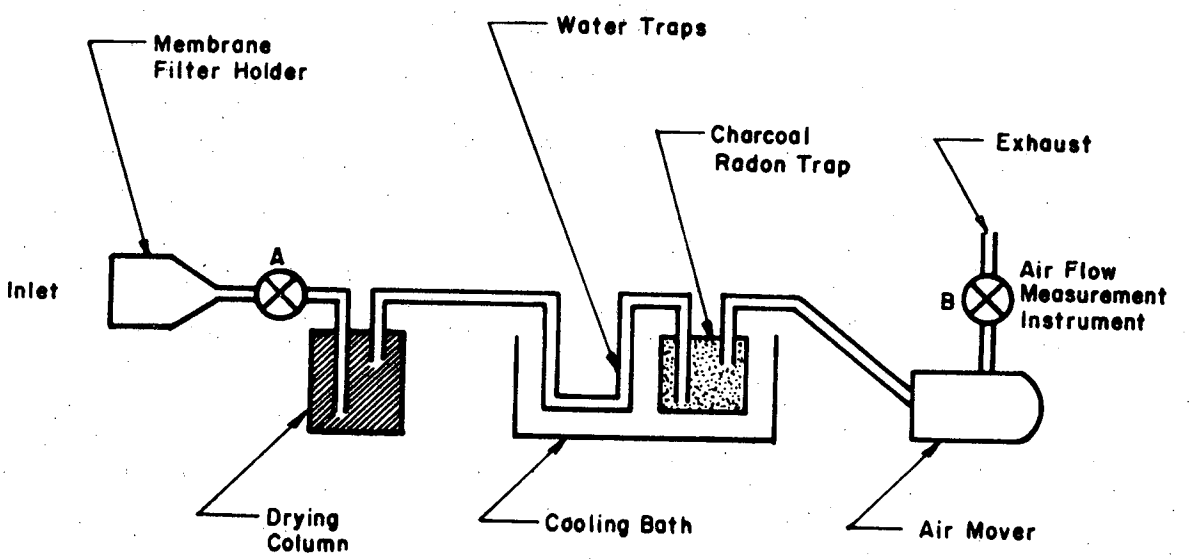

A: Calibrated Vacuum Type

B: Rotameter

Fig. 4

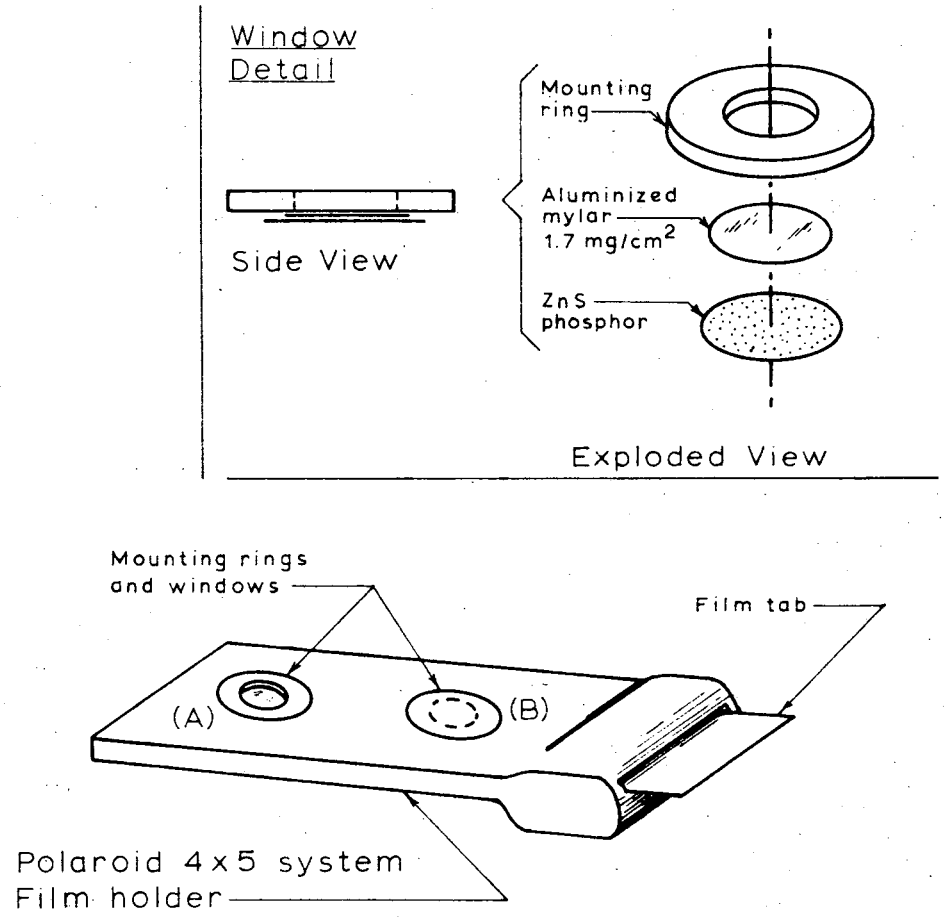
Window
Detail
Side View
Mounting
ring
Aluminized
mylar
1.7 mg/cm2
ZnS
phosphor
Exploded View
Mounting rings
and windows
Film tab
(A)
(B)
Polaroid 4x5 system
Film holder

Fig. 5

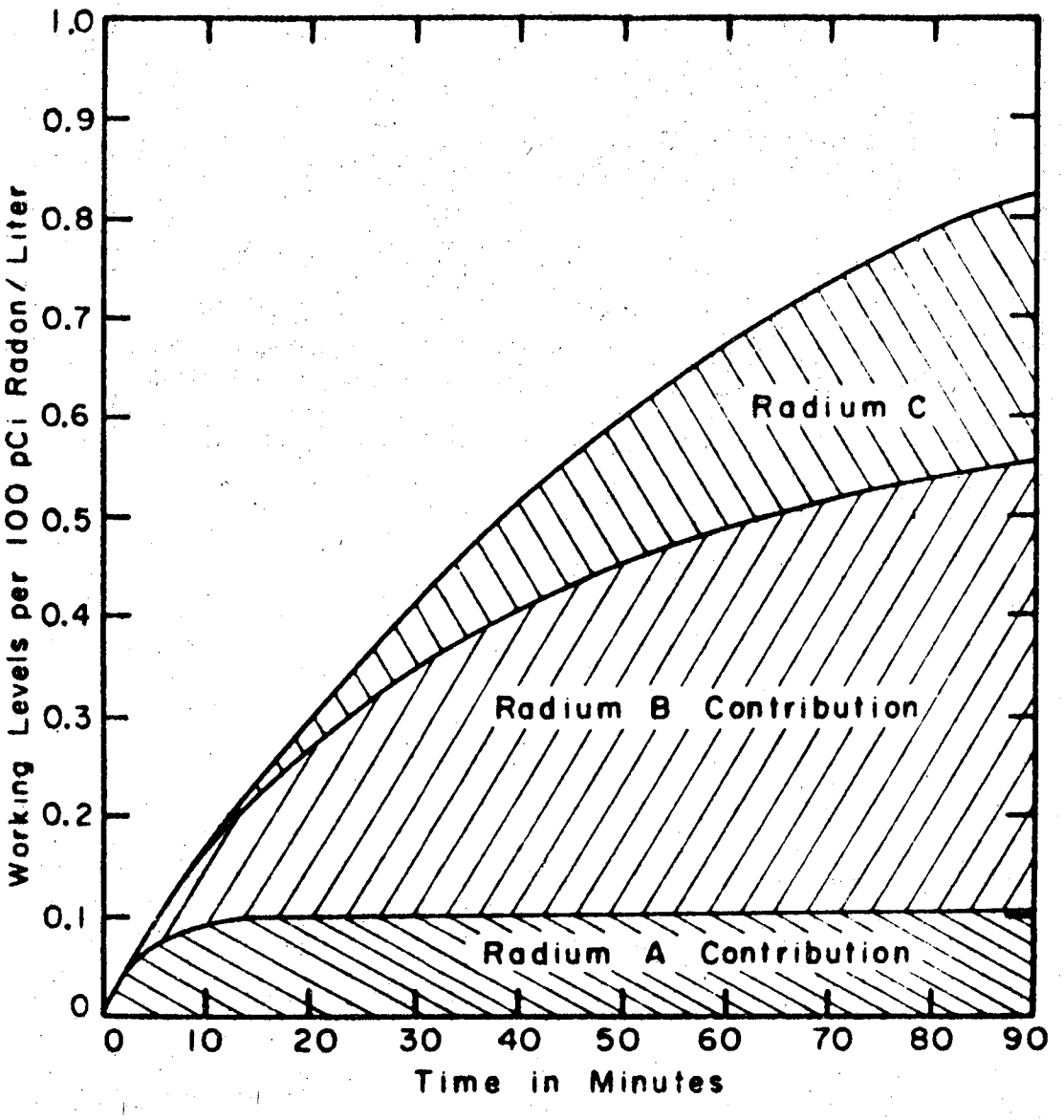
1.0
0.9
0.8
0.7
0.6
0.5
0.4
0.3
0.2
0.1
0
Working Levels per 100 pCi Radon / Liter
Radium C
Radium B Contribution
Radium A Contribution
0
10
20
30
40
50
60
70
80
90
Time in Minutes

Fig. 6

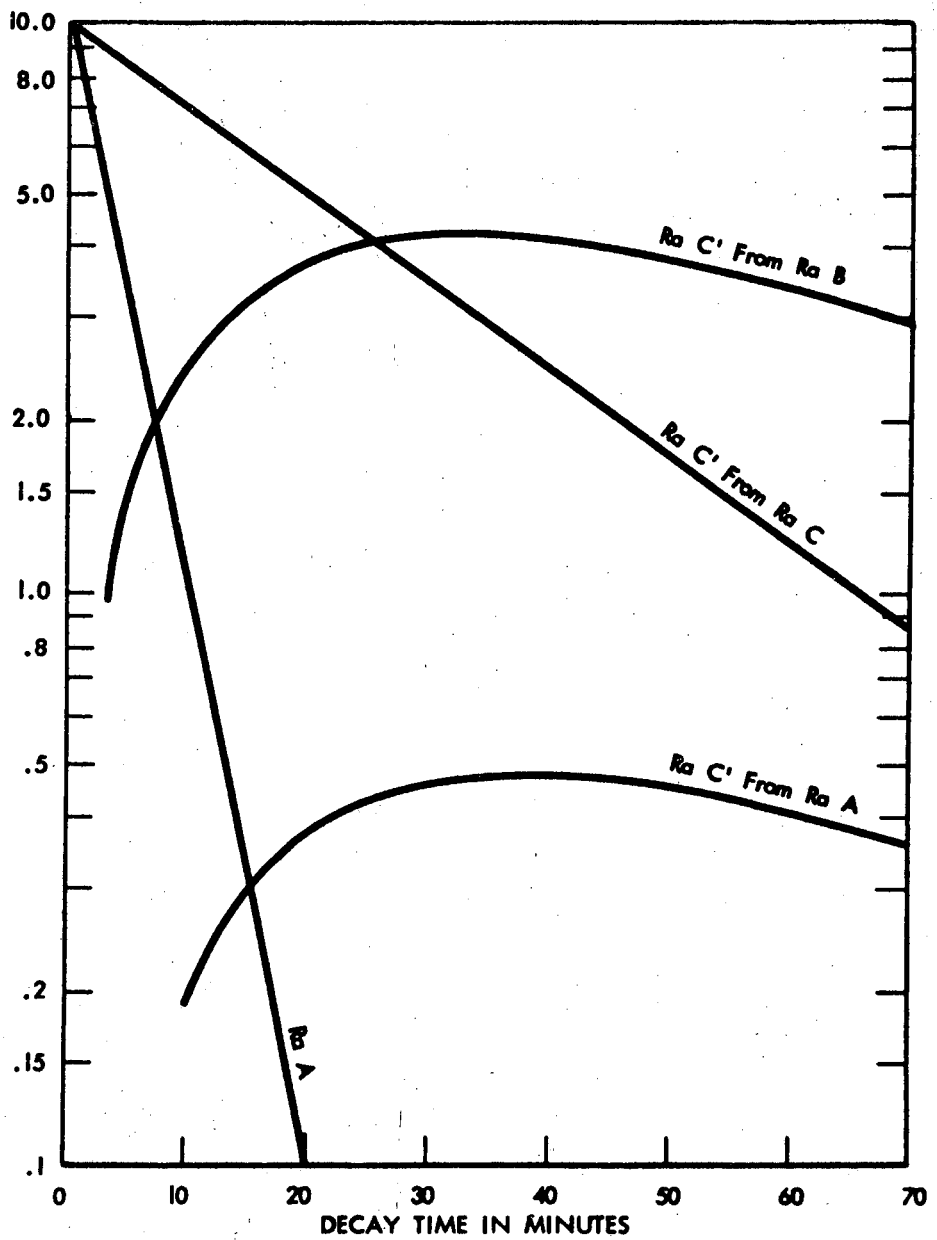
10.0
8.0
5.0
2.0
1.5
1.0
.8
.5
.2
.15
.1
0
10
20
30
40
50
60
70
DECAY TIME IN MINUTES
Ra C' From Ra B
Ra C' From Ra C
Ra C' From Ra A
Ra A

Fig. 7

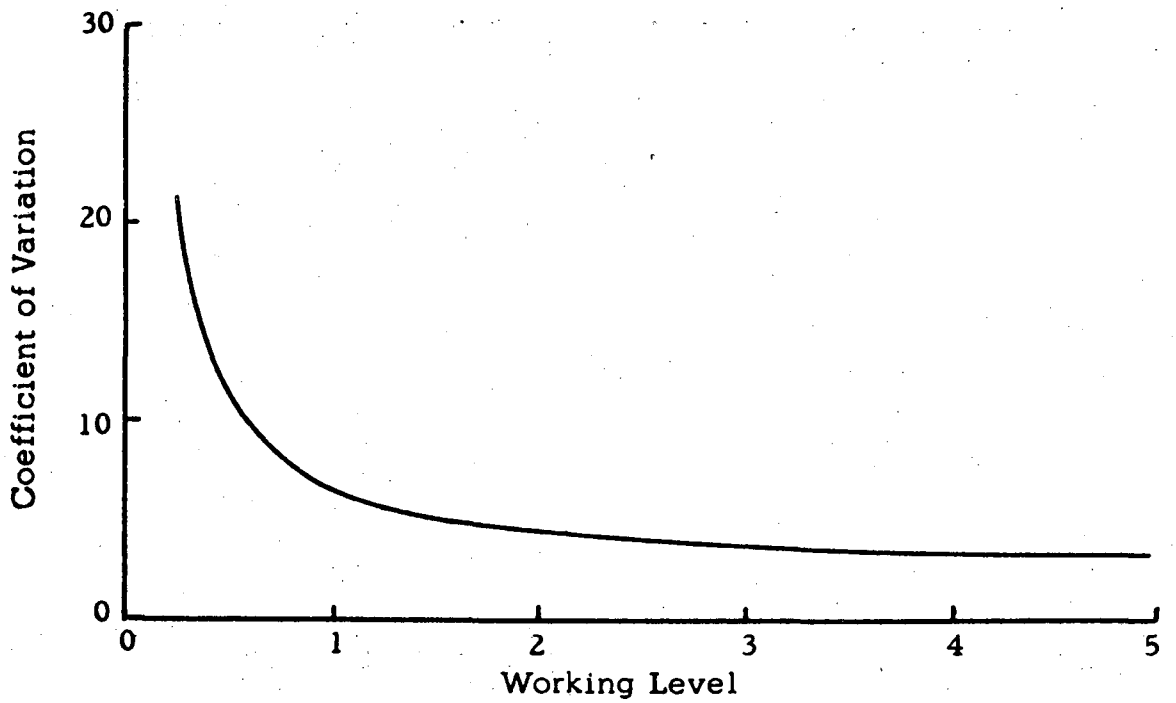

Fig. 8

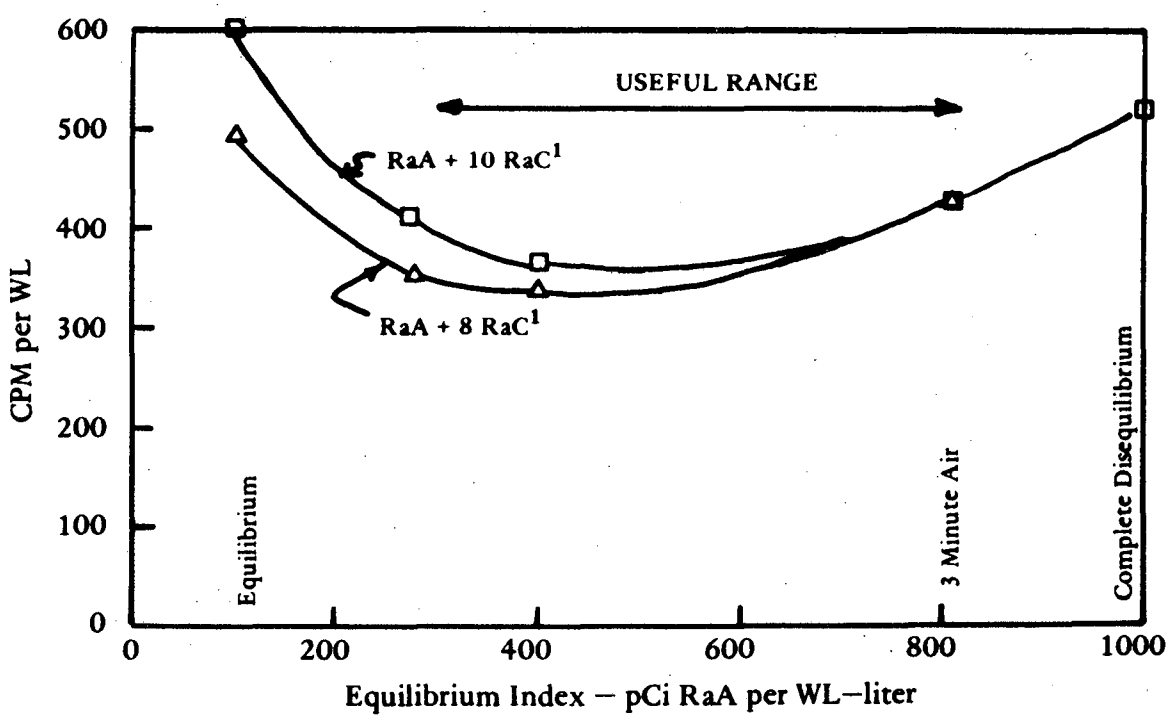
600
500
400
300
200
100
0
CPM per WL
USEFUL RANGE
RaA + 10 RaC1
RaA + 8 RaC1
Equilibrium
3 Minute Air
Complete Disequilibrium
0
200
400
600
800
1000
Equilibrium Index – pCi RaA per WL–liter

Fig. 9

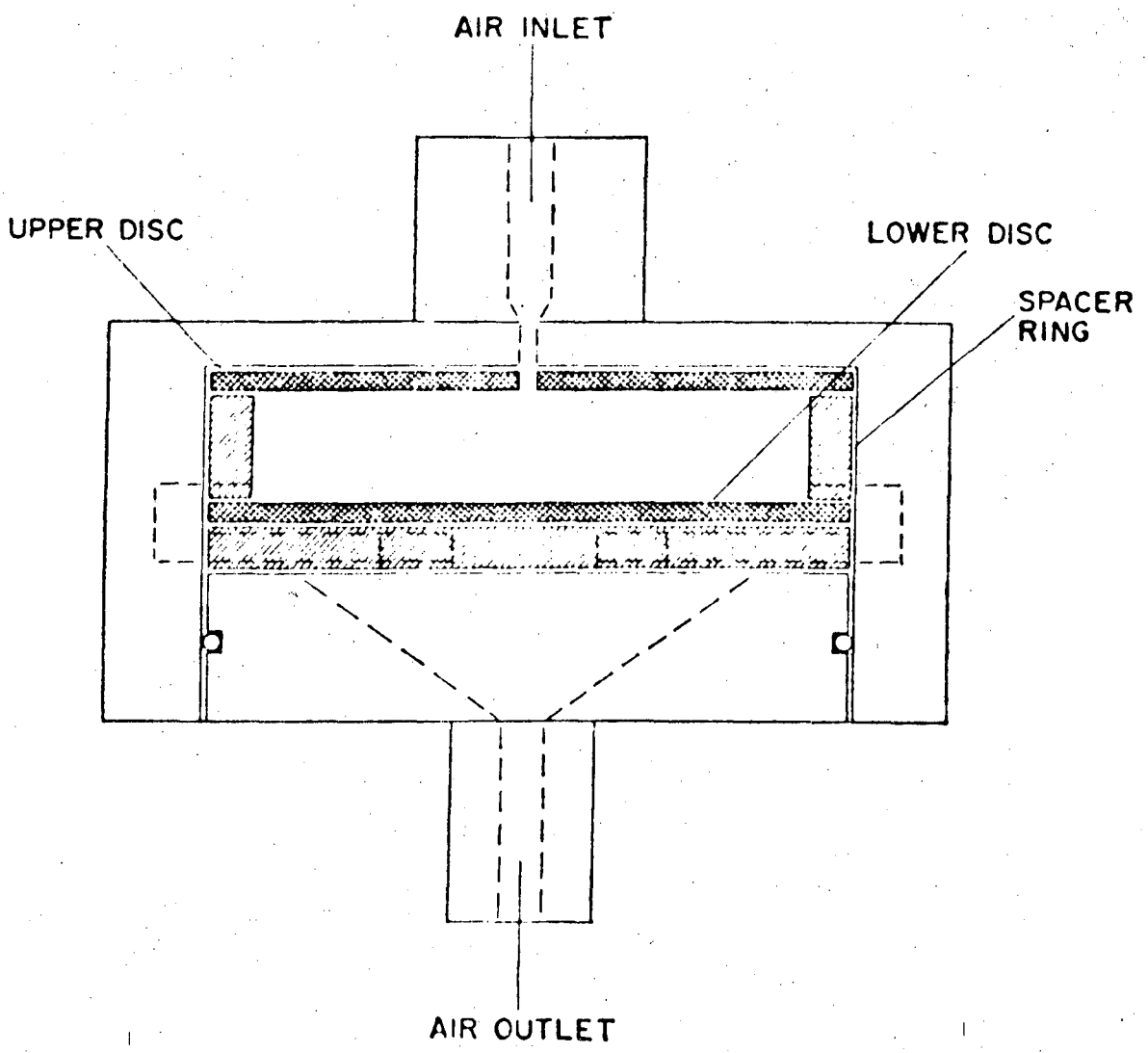

Fig. 10

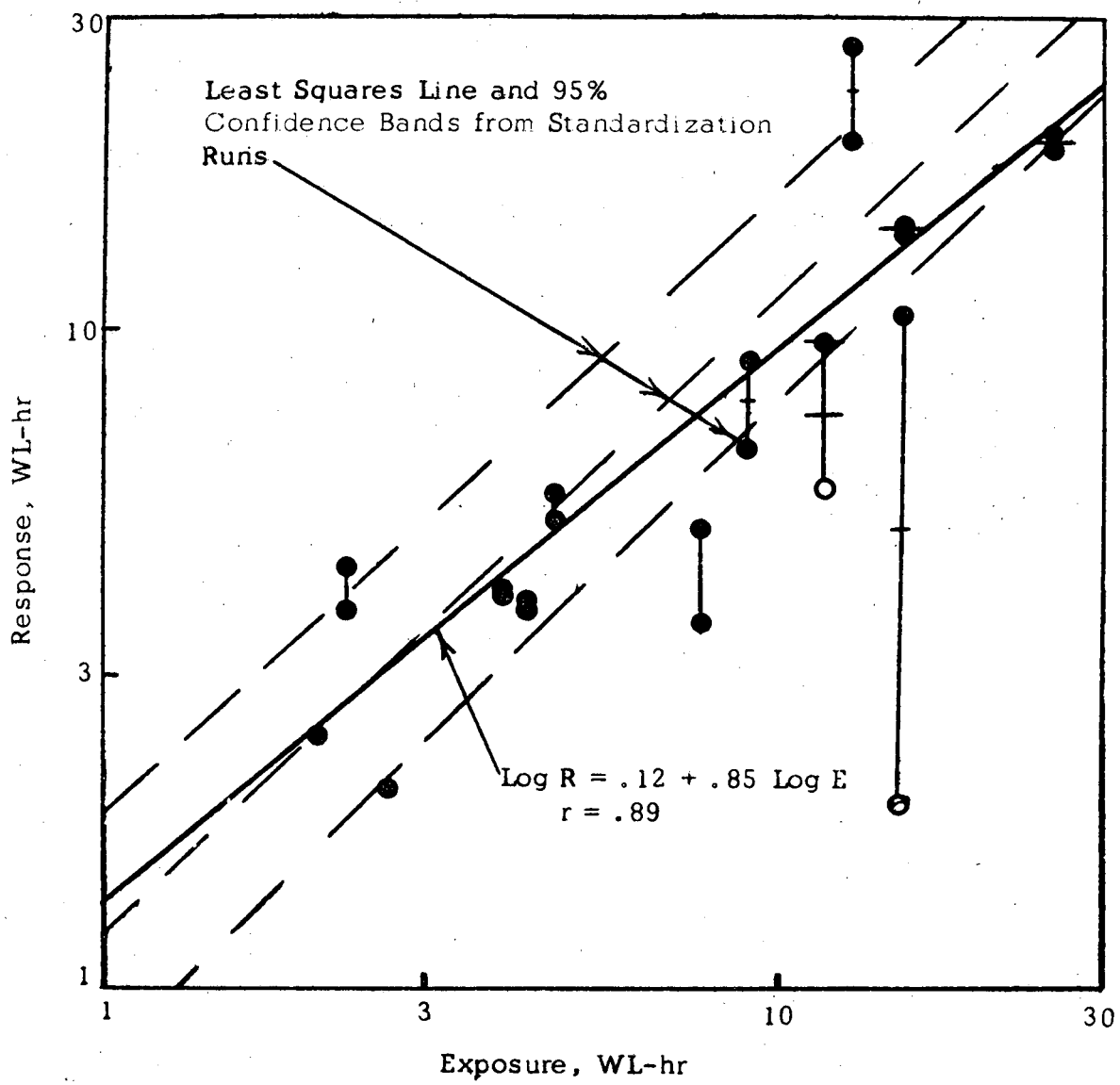
Least Squares Line and 95%
Confidence Bands from Standardization
Runs
Log R = .12 + .85 Log E
r = .89
Response, WL-hr
Exposure, WL-hr
30
10
3
1
1
3
10
30

Fig. 11

LEGAL NOTICE

This report was prepared as an account of work sponsored by the United States Government. Neither the United States nor the United States Atomic Energy Commission, nor any of their employees, nor any of their contractors, subcontractors, or their employees, makes any warranty, express or implied, or assumes any legal liability or responsibility for the accuracy, completeness or usefulness of any information, apparatus, product or process disclosed, or represents that its use would not infringe privately owned rights.

TECHNICAL INFORMATION DIVISION
LAWRENCE BERKELEY LABORATORY
UNIVERSITY OF CALIFORNIA
BERKELEY, CALIFORNIA 94720