LBL-15907
c.2

Lawrence Berkeley Laboratory

UNIVERSITY OF CALIFORNIA

RECEIVED
LAWRENCE
BERKELEY LABORATORY
MAY 17 1983
LIBRARY AND
DOCUMENTS SECTION

ENERGY & ENVIRONMENT DIVISION

To be presented at the Second International Congress on Building Energy Management (ICBEM-II), Ames, IA, May 30-June 3, 1983

VENTILATION BY STRATIFICATION AND DISPLACEMENT

Eimund Skaaret

March 1983

TWO-WEEK LOAN COPY

This is a Library Circulating Copy which may be borrowed for two weeks. For a personal retention copy, call Tech. Info. Division, Ext. 6782.

ENERGY AND ENVIRONMENT DIVISION

Prepared for the U.S. Department of Energy under Contract DE-AC03-76SF00098

LBL-15907
c.2

DISCLAIMER

This document was prepared as an account of work sponsored by the United States Government. While this document is believed to contain correct information, neither the United States Government nor any agency thereof, nor the Regents of the University of California, nor any of their employees, makes any warranty, express or implied, or assumes any legal responsibility for the accuracy, completeness, or usefulness of any information, apparatus, product, or process disclosed, or represents that its use would not infringe privately owned rights. Reference herein to any specific commercial product, process, or service by its trade name, trademark, manufacturer, or otherwise, does not necessarily constitute or imply its endorsement, recommendation, or favoring by the United States Government or any agency thereof, or the Regents of the University of California. The views and opinions of authors expressed herein do not necessarily state or reflect those of the United States Government or any agency thereof or the Regents of the University of California.

Paper to be presented at the
Second International Congress
on Building Energy Management
(ICBEM-II), Ames, Iowa, May 30-
June 3, 1983.

LBL-15907
EEB-Vent 83-5

VENTILATION BY STRATIFICATION AND DISPLACEMENT

Eimund Skaaret*

Building Ventilation and Indoor Air Quality Program
Lawrence Berkeley Laboratory
University of California
Berkeley, CA 94720

March 1983

This work was partially supported by the Assistant Secretary for Conservation and Renewable Energy of the U.S. Department of Energy under contract No. DE-AC03-76SF00098.

*Permanent address: Norwegian Institute of Technology
Division of Heating and Ventilating
N-7034 Trondheim - NTH
Norway

VENTILATION BY STRATIFICATION AND DISPLACEMENT

Eimund Skaaret

Norwegian Institute of Technology
Division of Heating and Ventilating
N-7034 Trondheim - NTH
Norway

ABSTRACT

Ventilation effectiveness is not one single index which can be used for classifying ventilating systems. It is shown that a system has different effectivenesses depending on the characteristics of the pollution sources. A transient ventilation effectiveness can be used to generally characterize the system behavior during transient conditions. This index is, for a given system, dependent only on the thermal conditions.

Using the different concepts of ventilation effectiveness and knowledge of the nature of the diffusion process it is concluded that the mixing principle in ventilation is not the best one. The displacement principle working vertical-up (air supply directly to the zone of occupation) is generally working much better. Density stratification improves the efficiency. Conditions for stable thermal stratification is dealt with. Room heating systems, is concluded to be based on the radiant heating principle. A no recirculating displacement solution using a heat exchanger is claimed to be energy efficient. Research work which substantiates the different conclusions is referenced.

Keywords: ventilation effectiveness, air quality, stratification, displacement ventilation, modeling, energy.

INTRODUCTION

A primary aim for ventilation is to supply fresh (clean) air to the zone of occupation, i.e. to achieve best possible air quality with a given ventilation air flow rate. It is still common to relate air quality to the overall air exchange rate for a room. This is a too simple and crude procedure.

Ventilation systems are designed or developed more from an energy point of view (air being an energy carrier) than as it should be, based on air quality considerations. Main features are:

- Recirculation, mainly for conserving energy.
- Mixing supply air with room air outside the zone of occupation, mainly for comfort reasons. (Picking up heating and cooling loads and reducing velocities and temperature differences).
- Aiming at complete mixing, mainly for conserving energy.

In order to achieve efficient mixing a jet type air supply is necessary and widely used. The violent turbulence and mixing achieved in this way ensures that uncontaminated air never reaches the zone of occupation. It is probably also presumed that installation costs are at lowest using this kind of systems.

Considering air quality through the design process leads to a different approach. The basic principle is to provide for clean unmixed air for the breathing zone and a one way track of contaminants out of the breathing zone. Diffusion of contaminants and heat must be encountered. Heat content has a dimension similar to concentration, kJ/m^3 ($\rho c_p T$) or kJ/kg ($c_p T$). Turbulent

diffusion is the significant diffusion process in occupied climatized rooms. Then heat and contaminants have the same diffusion constant, and contamination and thermal loads are to be treated in the same way. Doing this it is not obvious that heating and ventilating can be combined in a single system. Ventilation effectiveness or ventilation efficiency, from an air quality point of view, is highly important and ventilating systems should be evaluated in terms of this. Then it is obvious that good mixing and overall air exchange rate are not necessarily related to efficient ventilation.

VENTILATION EFFECTIVENESS

There are several concepts of ventilation efficiency or ventilation effectiveness. A general conclusion is that it is not possible to assign a single number expressing the performance of ventilating system. Ventilation effectiveness is closely connected to the characteristics of the pollution sources. To illustrate this we will look at two quite different types of contamination sources, a homogeneous and a point source. A homogeneous contamination source is described as an evenly distributed production of contaminants throughout the whole room volume. The source is characterized as having the same volumetric production rate in every differential small volume element:

$$\dot{q} = \frac{\dot{m}}{\dot{V}} \quad \left[\frac{kg}{m^3 \; s}\right] \tag{1}$$

The point source is then the quite opposite source type, emitting the contaminants concentrated to single points.

Homogeneous pollution source - steady state

The concentration distribution is influenced by the method of ventilation. The mixing method will, if complete mixing is achieved, give the same concentration in every point of the room, fig. 1. (slashed line) representing a vertical section through the room.

$$C_{cm} = \frac{\dot{m}}{\dot{V}} = \frac{\dot{m}/v}{\dot{V}/V} = \frac{\text{Volumetric production rate}}{\text{Volumetric ventilation air flow rate}} \tag{2}$$

where: C_{cm} = Complete mixing concentration
$\dot{m}$ = Total production rate of contaminants.

Volumetric ventilation air flow rate has the dimension of a frequency and is called the frequency of air exchange. Another expression is the air exchange rate. With this system air quality is closely connected to the air exchange rate. But is this then the best system? It is not because it is easy to find a system which gives a better air quality in the zone of occupation. One system which is quite opposite to complete mixing is plug flow. The concentration profile for a vertical-up plug flow is showed in fig. 1, solid line, and it is obvious that the air quality in the zone of occupation is much better than with the mixing system. Both systems have the same exhaust air concentration. It is a little difficult, however, to decide which system should be the reference system. Because the mixing system is widely used complete mixing is taken to be the reference system.

Measuring now the concentration in the zone of occupation, i.e. the mean concentration C_o, the ratio between C_{cm} and C_o can be calculated

$$\frac{C_{cm}}{C_o} = \frac{\dot{m}/V}{\dot{V}/V \; C_o} = \frac{\dot{m}/C_o/V}{\dot{V}/V} = \frac{n^o}{n} \tag{3}$$

where: n = nominal air exchange rate
n^o = apparent air exchange rate for the zone of occupation = $\dot{m}/C_o$

This ratio is an air quality index and is useful for describing the system performance.

Point source - steady state

An ideal mixing system will again create an even contamination distribution of contaminants in the room, C_{cm}. It will be difficult if not impossible to achieve this in practice, due to limited effectiveness of the diffusion process, limiting the ability of the system to create a momentary and homogeneous distribution of the contaminants, fig. 2. The vertical concentration distribution at two different locations in a vertical section through the source is showed by slashed lines. In fig. 3 the same situation is showed using a vertical-up plug flow. Note the

marked difference in the concentration distribution between plug flow and mixing. For the plug flow system the concentrations of contaminants is essentially zero outside the plume. The concentrations in the plume would probably be higher using plug flow because of a lower diffusion constant [1]. This is due to the lower turbulence level compared to mixing systems. On the other hand the plume using a mixing system would occupy more space in the zone of occupation.

Again, the ratio between the concentration C_{cm} and C_o is meaningful to describe the system performance. This ratio would be infinite outside the plume, using plug flow, indicating how different and better the performance would be compared to the situation having a homogeneous source. A horizontal plug flow could be hazardous due to back flow circulation behind persons, furniture etc., dispersing the contamination through a greater part of the zone of occupation, of course in the same way as when using a mixing system [1]. A mixing system will also behave different from the homogeneous source situation, but only in the plume and back flow areas where the air quality is very much impaired.

Discussion - steady state The analysis so far has shown that a steady state ventilation efficiency defined as the ratio between the exhaust air contaminant concentration and the concentrations of the contaminants in the zone of occupation very well describes the effectiveness (performance) of a ventilation system with respect to air quality. It is further demonstrated that the contamination source characteristics have a great influence on the system performance. To further demonstrate thermal load influence on the performance, we take as an example a common used combined heating and ventilation system, fig. 4, operating in a room with a homogeneous contamination source. Because of the thermal stratification the transport of ventilation air to the zone of occupation is impaired resulting in a vertical concentration profile as shown, indicating an increased contamination concentration in the zone of occupation. The concentration in the upper zone will be equal to the complete mixing concentration as a consequence of the mass balance condition. This is experimentally verified in [2] and [3]. The situation will not be very much better having point sources. This is experimental verified in [3].

Diffusion model - transient state
The circulation patterns in ventilated rooms can be treated as if there were two or more separated but communicating zones, internally rather well mixed [3] and [4], as shown in fig. 5. Mathematically this can be treated as if each zone had a uniform concentration of the contaminants, i.e. a large diffusion coefficient, while the diffusion between the zones is expressed through an air exchange parameter defined as the ratio between the exchanged flow rate and the total ventilation flow rate, β. Having a two zone model as in fig. 5, $\beta = 0$ means complete separation and $\beta = \infty$ means complete mixing. Pure plug flow can not be handled by this model but what we may call displacement flow is encountered. Displacement flow is defined as the situation when supply is located in the one zone and exhaust in the other. The physical validity of this model is verified in [2], [3], and [4]. Similar solution of the multizone diffusion equations is also found in [8].

The characteristic behavior of a diffusion model like this is, that in a transient situation (a step in the production rate of contaminants), the transfer curves become parallel after a certain time (after the starting transients are vanished) when concentrations are plotted logarithmic versus a linear time scale, fig. 6, and if mixing is not complete. If the concentration scale is the natural logarithm, the slope of the lines, λ_1, can be compared to an air exchange frequency, and we may call this an apparent air exchange frequency because it is different from the nominal frequency, n, for the room. What is important to note is that this apparent air exchange frequency is greater than the nominal if we have a displacement flow and less if we have a short circuiting flow, i.e. supply and exhaust are located in the same zone, fig. 5. It can be shown that the slope of the curve is equal to the ratio between the concentration in the exhaust duct and the spatial mean concentration for the room [5]. For all these reasons the ratio between the slope of the curves and the nominal air exchange rate is related to the overall air quality for the room and is an overall ventilation effectiveness or performance index.

$$\epsilon_{tr} = -\frac{\lambda_1}{n} \tag{4}$$

where: λ_1 = the slope of the concentration curves.

The normal way to find this index is to completely stop the contaminant production or to supply tracer gas at a constant rate in the supply duct until an equilibrium concentration is reached in the room. It is important to note that the described index does not depend on the source characteristics, and is for this reason not to be used for describing the system performance during steady state.

A local air exchange frequency can be calculated from transient concentration measurements by taking the ratio between the concentration at zero time and the area between the concentration curve and the equilibrium concentration [2].

$$n^o = \frac{C(o)}{\int_o^\infty [C(t) - C_{eq}]\, dt} \tag{5}$$

The ratio between this local air exchange frequency and the nominal is a local transient ventilation effectiveness (efficiency).

$$\epsilon^o{}_{tr} = \frac{n^o}{n} \tag{6}$$

The inverse of the frequency is a time constant and indicates the response time for the system. It is obvious that the above index is more related to the local air quality than the overall index, because it accounts for the total behavior of the different decay curves.

Using a tracer gas decay from a well mixed starting condition, $\epsilon^o{}_{tr}$ is the same as the ratio between the exhaust air concentration and the local concentration of contaminants having a homogeneous source with a constant production rate [2]. In many practical cases especially in industry, using a displacement ventilating system, the contaminants will not disperse significantly until reaching the upper one, i.e., outside the plumes from point sources the concentrations during steady state will be the same as if the production of contaminations took place in the upper zone. It can further be theoretically proven that taking the ratio between the concentration in the exhaust and the "area under the curve" for the lower zone for a decay, starting with steady state conditions when supplying all tracer gas to the upper zone, gives the steady state ratio between the concentrations in the exhaust and the lower zone.

If infiltration/exfiltration or exhaust takes place in each zone (local exhaust in the zone of occupation) it can also be proven tat the same transient test evaluation gives a result very close to the ratio between the complete mixing concentration and the concentration in the zone of occupation. This makes it possible by use of tracer gas to evaluate the steady state ventilation effectiveness for a displacement system in a room having both infiltration and local exhaust, neither measuring the mean exhaust concentration nor simulating or having the sources in operation, but just supply tracer gas to the upper zone until steady state is reached and then measure the decay in the lower zone.

Realizing that neither pure plug flow nor ideal complete mixing is practically obtainable, it is of interest to know the actual range of effectiveness for different ventilation schemes. Based on the experimental verification of the usefulness of a two zone diffusion model [2], [3], [4], and [5] an efficiency chart is theoretically calculated by solving the mass balance equations using the two-zone concept previously described. The chart is shown in fig. 7 and 8. In these figures the mixing parameter β expresses the mixing intensity and it is readily seen that interzonal circulation have to be at least 15 times the ventilation air flow rate in order to characterize the space as completely mixed. In the figures $\emptyset$ expresses the ratio between the production rate of contamination in the upper zone and the total production rate. One can from the charts see that short-circuiting types of systems with shortcircuiting outside the zone of occupation require intense circulation in order to achieve a proper ventilation effectiveness. This principle should by all means be avoided. The efficiency decreases sharply when the exchange parameter falls below 4. These types of systems are unfortunately widely used.

A most interesting feature to see is the very good performance for a vertical-up displacement type of system. The curve denoted $\emptyset = 1$ indicates promising results if we are able to design systems in a way that point sources get a one way route out of the zone of occupation. Experience from industry is that these types of systems work very well and it is realistic to obtain an exchange factor less than 1. Results not yet published indicate that displacement systems vertical-up perform very well in office rooms too. Note that the displacement systems never can be worse than complete mixing.

Conclusions - ventilation effectiveness

It is, by means of different concepts of ventilation efficiency, concluded that displacement types of ventilation systems should always be used in order to achieve efficient ventilation, and a vertical-up scheme is superior to every other types of systems.

To achieve an efficient displacement process, it is necessary to take advantage of thermal stratification. This means that the supply air should never be used for heating the rooms. Contrary, the supply temperature should be kept lower than the temperature in the zone of occupation. In order to avoid draft the supply velocity has to be determined from comfort requirements. The best displacement effect is obtained when the turbulence intensity is low. The supply diffusers used are made either of a porous material like a filter mat, or of perforated plates. Best experience is not surprisingly obtained with the porous types of diffusers.

ENERGY ASPECTS

The high efficient displacement ventilation principle requires that no recirculation should be used, and the supply air should have a temperature lower than the temperature in the zone of occupation, but not very much lower than the lower comfort limit. These requirements seem to oppose energy conservation since excess heat in the rooms cannot directly be utilized for increasing the temperature of the ventilation air. This problem is easily overcome by using heat exchangers recovering the energy in the exhaust air. Such devices are already widely used. Consequently, excess heat from the rooms is used outside the rooms for preheating the supply ar. The heat exchanger loss resulting from a higher exhaust air temperature than in ordinary systems and also the resulting increased transmission losses are apparently excess losses. However, due to increased effectiveness of ventilation, ventilation air flow rates can be reduced so much that all these extra losses are more than compensated for.

As for cooling the situation will be a little different. Air flow rate requirements for temperature control might exceed the requirements for proper air quality. Is then complete outside air systems energy efficient (outside air = clean air)? As long as free cooling is utilized there is no problem. In fact free cooling is possible up to higher outdoor air temperatures compared to mixing systems, due to a higher required supply air temperature. When mechanical cooling is needed it is postulated that the energy consumption will decrease for two reasons.

- The heat exchanger is used when exhaust air temperature is higher than the outdoor air temperature.
- The supply air temperature is higher, resulting in a higher evaporating temperature for the refrigerant used, which in turn decreases the temperature difference between the evaporator and the outside environment. All this will increase the COP for the cooling machinery.

The conclusion is that air quality is improved using less energy. If the method is cost effective or not depends on many factors. A complete study is not performed so far. Comparing systems with equal air quality and comfort standard the displacement solution has not necessarily a higher first cost. Architectural and constructional considerations are highly important. Much can be achieved by integrating ventilation systems and building.

CONDITIONS FOR THERMAL STRATIFICATION IN DISPLACEMENT VENTILATION.

At the Norwegian Institute of Technology, the Division of Heating and Ventilating, model tests are carried out to determine the conditions for stable thermal stratification. An air model was used [6], [7], consisting of an insulated plexiglas box 0.65 m^3 in volume Fig. 9. Air supply was at the bottom of each long wall, through a wall long slot which was covered by a filtermat to increase the resistance and to control the turbulence. The exhaust was located at the top of the model. There was no supply fan. In the middle of the room a room long heat source was located which in this situation simulated a hot industrial process.

The slot width, air flow rate and heat input were varied. The condition for stable thermal stratification was in this way found to be

$$Ar_o \geq 1.136 \times 10^{-8} \left[\frac{\dot{V} \rho_o^{1/3}}{E^{1/3} a^{2/3}} \right]^{-5.03} \tag{7}$$

$$Ar_o = \frac{g \, d \, \Delta T_{e-s}}{U_o^2 \, T_r} \tag{8}$$

where: Ar_o = Archmedian number based on supply opening width and supply air velocity and the difference between exhaust and supply air temperature.
$\dot{V}_o$ = Ventilation air flow rate per unit room length (m^3/s m).
E = Heat output from the process per unit room length (w/m).
a = Distance from floor to the center of the supply slot (m).
d = Supply slot width (m).
U_o = Supply air velocity (m/s).
ΔT_{e-s} = Temperature increase of the air through the room (K).
ρ_o = Density of the supply air (kg/m^3).
g = Acceleration due to gravity (m/s^2).
T_r = Room temperature (absolute) (K).

Note that $\dot{V}_o$ and E is referred to the room length, not the slot length. The dimensionless parameter in the equation was found through dimensional analysis. Note also that the condition holds only if air is supplied through a porous medium. Air supply through perforated plates will certainly influence the result. The condition has been compared with real plants designed with the same ventilation principle and seems to agree fairly well. Several ventilation plants for industrial buildings have been designed in Norway based on water model studies at the River and Harbor Laboratory. None of these studies has been made to find the stability conditions. A solution was always chosen which visually gave the best stratification. The air model experiments were repeated in a similar water model and there was no significant difference in the results apart from that the stratification was more ideal in the water model.

For all model tests having stable stratification, the stratification height was plotted versus the parameter ($\dot{V}o/E^{1/3}$), fig. 10. The stratification height can be fairly well expressed by the formula shown in the figure, solid line. For comparison the convective air flow rate above a line source is shown, slashed line, based upon a 60% convective part of the heat output, k = 0.6. This reveals the very interesting, but also expected, result that if stable thermal stratification is achieved, the stratification height is approximately the same as the height to which the supply air is able to feed the convection air currents. Above this height recirculation takes place resulting in a well mixed zone, quite in agreement with the theoretical two zone model.

The results can be extended towards the conclusion that the best efficiency of a displacement ventilating system is achieved when supply air flow rate is equal to the sum of all convective air flow rates up to a height well above the zone of occupation. Of course, the displacement principle is working outside these limits, but less efficient. The basic condition is that the supply air temperature never exceeds the lowest air temperature in the zone of occupation.

Conditions impairing the ventilation effectiveness is downward convective currents on cold surfaces, increasing β. Also turbulence sources of any kind do the same. As for heating, radiant heating is preferable because this heating principle creates less convective currents and in addition increases the surface temperatures thus decreasing the downward convective currents. Another advantage is that air temperature can be lowered compared to a convective heating principle.

Finally it should be mentioned that the displacement stratification principle is different from the principle described lately in several conferences in the U.S., named "ventilation by stratification" which in principle is low short-circuiting as shown in fig. 8.

ACKNOWLEDGEMENTS

The work described in this paper was performed at the University of Trondheim, Norweigan Institute of Technology, Division of Heating and Ventilating and was supported by Norges Tehnisk Naturvitenskapelige Forskmingsraad.

The paper itself was written during the author's sabbatical with the Energy and Environment Division of Lawrence Berkeley Laboratory (LBL), Berkeley, California, USA. Partial support for this paper was received through LBL from the Assistant Secretary for Conservation and Renewable Energy of the U.S. Department of Energy under Contract No. DE-AC03-76SF00098. The author wishes to thank the staff of LBL for their help with this paper, in particular Nancy Morrison for her excellent word processing and Moya Melody for help with the artwork and pasteup.

REFERENCES

1. Ljungqvist, Bengt, "Some observations on the interaction between air movements and the dispersion of pollution." Document D8:1979, Swedish Council for Building Research.

2. Sandberg, Mats, "What is ventilation efficiency?" Building and Environment, Vol. 16, No. 2, 1981, pp. 123-135.

3. Skaaret, Eimund and Mathisen, Hans Martin, "Ventilation efficiency," International Symposium on Indoor Air Pollution, Health and Energy Conservation, Amherst, Massachusetts, U.S., 1981.

4. Malmström, Tor-Göran and Ahlgren, Anders, "Aspects of efficient ventilation in office rooms," International Symposium on Indoor Air Pollution, Health and Energy Conservation, Amherst, Massachusetts, U.S., 1981.

5. Malmström, T.G. and Östrom, J. "Aspects of local ventilation effectiveness," D4-series no. 17, Division of Heating ad Ventilation, Royal Institute of Technology, Stockholm, 1980 (in Swedish).

6. Skaaret, Eimund, "Aspects of ventilation effectiveness and industrial ventilation," Seminar on Ventilating Engineering, especially in Hospitals, Laboratories, and Industry. KTH, Institute of Heating and Ventilating, Stockholm, 1982 (in Norwegian).

7. Hårstad-Evjen, J. "Ventilation by thermal stratification: model tests," Ex. Diss. The Norwegian Institute of Technology, Division of Heating and Ventilating, 1981, (in Norwegian).

8. Sinden, F.W. Multi-Chamber Theory of Air Infiltration," Building and Environment, Vol. 13, 1978, p. 21-28.

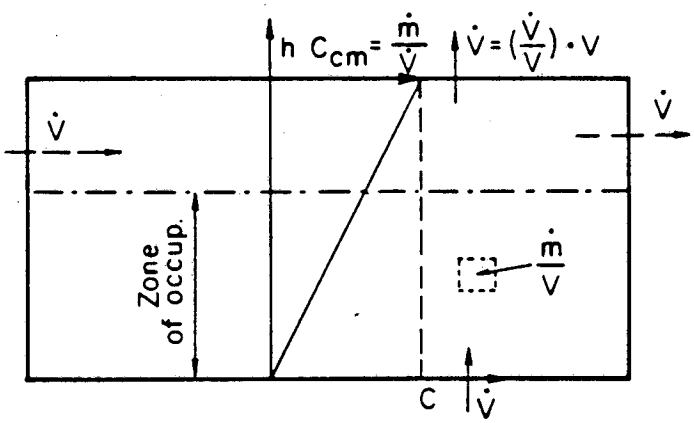

Figure 1. Concentration profile for a ventilated room. Homogeneous contamination source. Ideal plug flow--solid line. Ideal mixing--dotted line.

XBL8212-4279

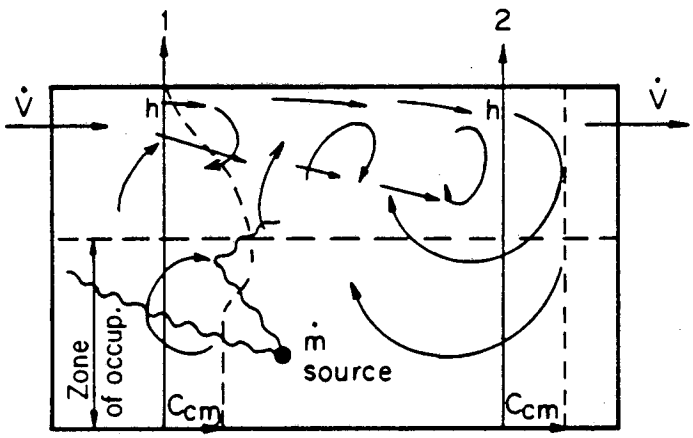

Figure 2. Jet-type mixing ventilation--concentration profiles. Point source. Profiles for two sections 1 and 2.

XBL8212-4278

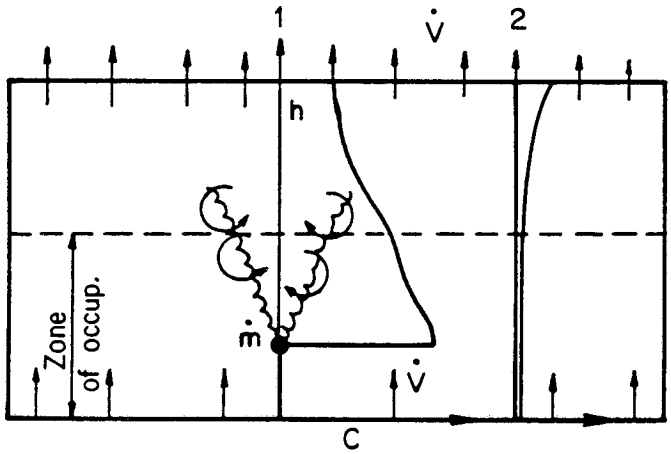

Figure 3. Plug flow (displacement) ventilation--concentration profiles. Point source. Profiles for two sections 1 and 2.

XBL8212-4277

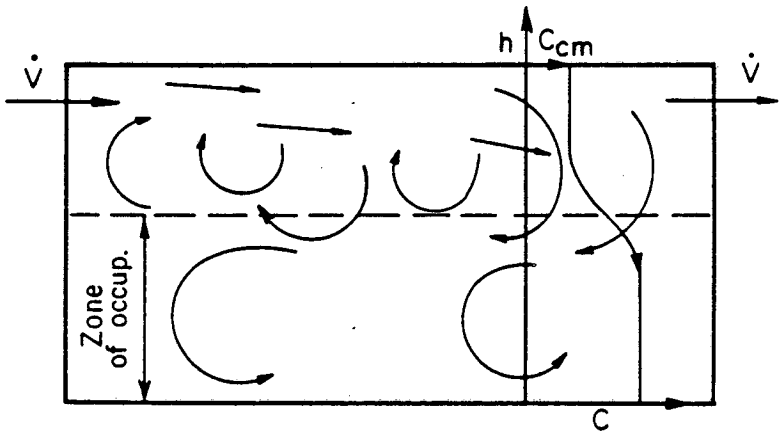

Figure 4. Short circuiting ventilation--concentration profile. Homogeneous source with thermal stratification.

XBL8212-4276

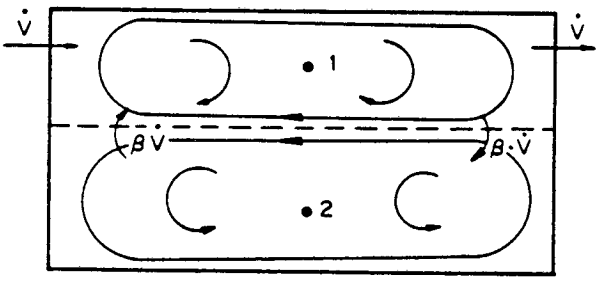

Figure 5. Two-zone mixing (diffusion) model.

XBL8212-4275

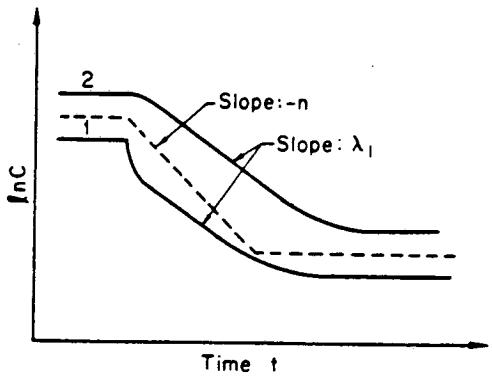

Figure 6. Concentration response curves for a step in contamination production rate. Two-zone situation.

XBL8212-4274

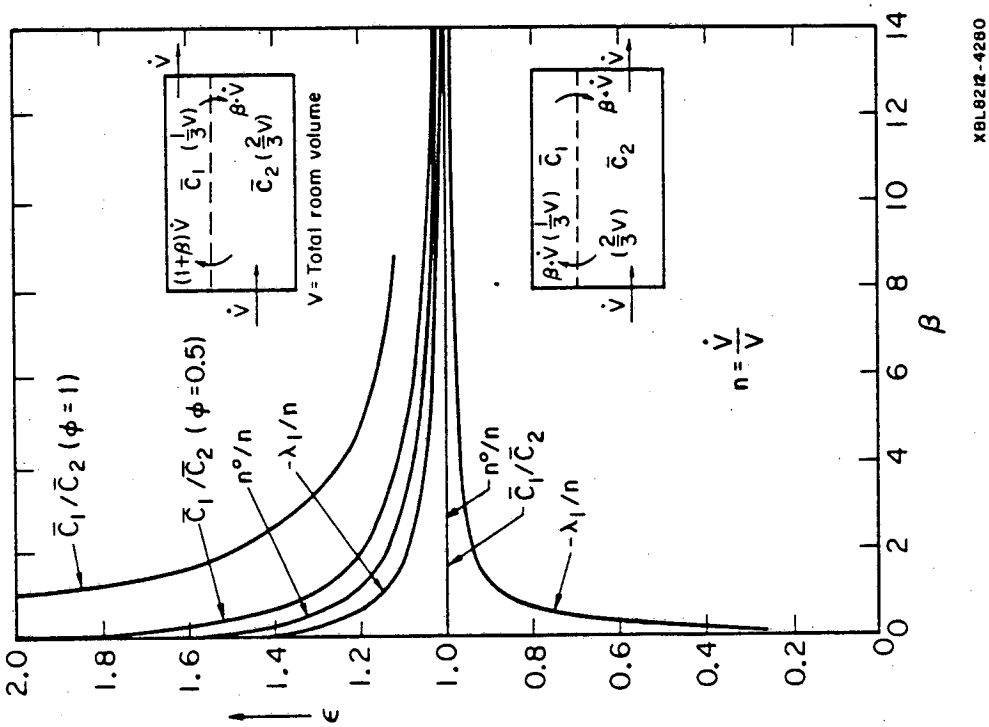

Figure 8. Calculated ventilation efficiency for a two-zone mixing model. Low shortcircuiting (bottom) and vertical-up displacement (top) flow.

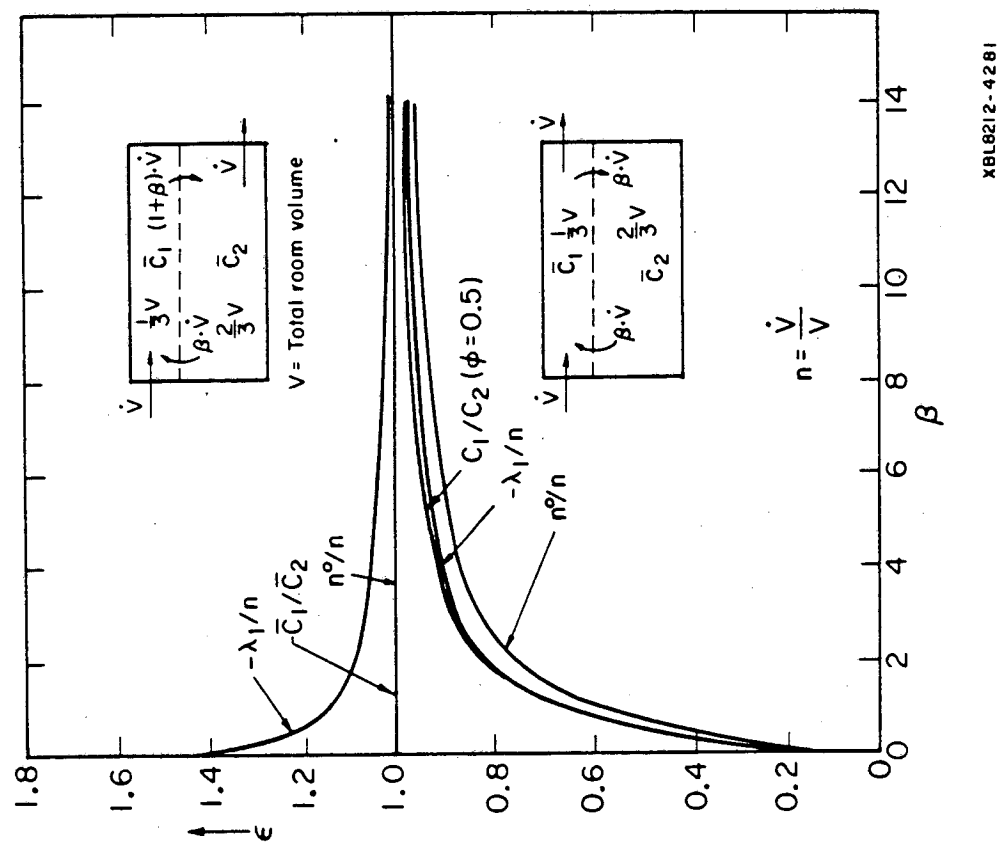

Figure 7. Calculated ventilation efficiency for a two-zone mixing model. High shortcircuiting (bottom) and vertical-downward displacement (top) flow.

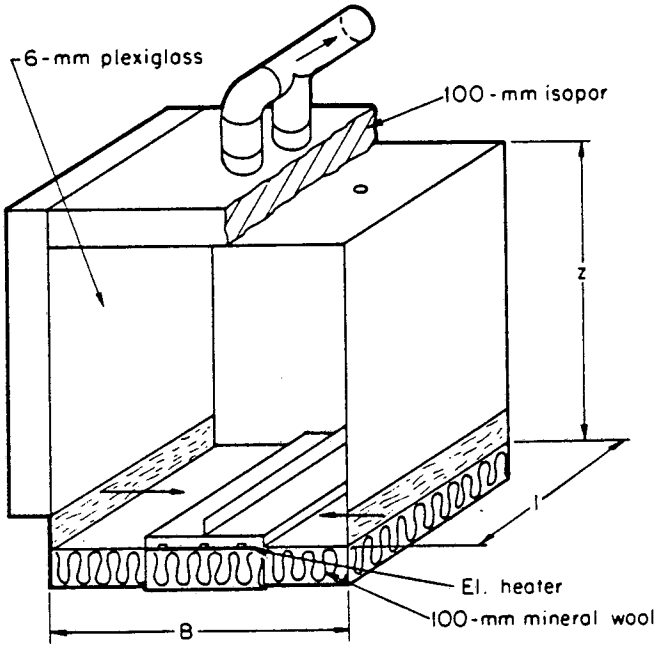

XBL8212-4283

Figure 9. Test model for studying thermal stratification.

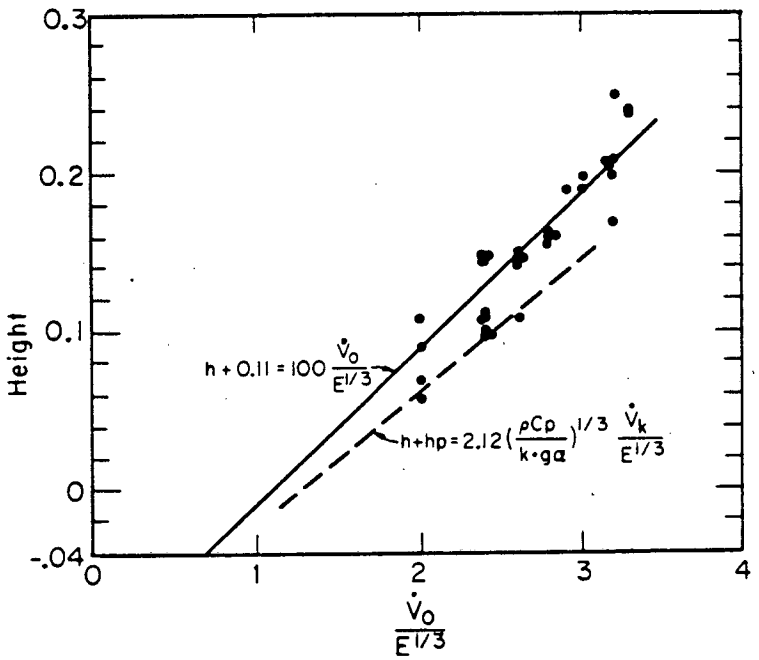

XBL8212-4282

Figure 10. Stratification height as a function of the model parameter $\dot{V}_o/E^{1/3}$
$\dot{V}_k$ = Air flow rate in convection plume (m^3/s.in).
C_p = Specific heat capacity for air (m/kgK).
k = Ratio of convective/total heat output.
α = Thermal volumetric expansion coefficient (K^{-1}).
h_p = Distance to imaginary point origin (m).

This report was done with support from the Department of Energy. Any conclusions or opinions expressed in this report represent solely those of the author(s) and not necessarily those of The Regents of the University of California, the Lawrence Berkeley Laboratory or the Department of Energy.

Reference to a company or product name does not imply approval or recommendation of the product by the University of California or the U.S. Department of Energy to the exclusion of others that may be suitable.

TECHNICAL INFORMATION DEPARTMENT
LAWRENCE BERKELEY LABORATORY
UNIVERSITY OF CALIFORNIA
BERKELEY, CALIFORNIA 94720